144MHz FM TRANSCEIVER

TM-221A/E/ES

SERVICE MANUAL

KENWOOD

©1987-3 PRINTED IN JAPAN
B51-3217-00 (O) 1551

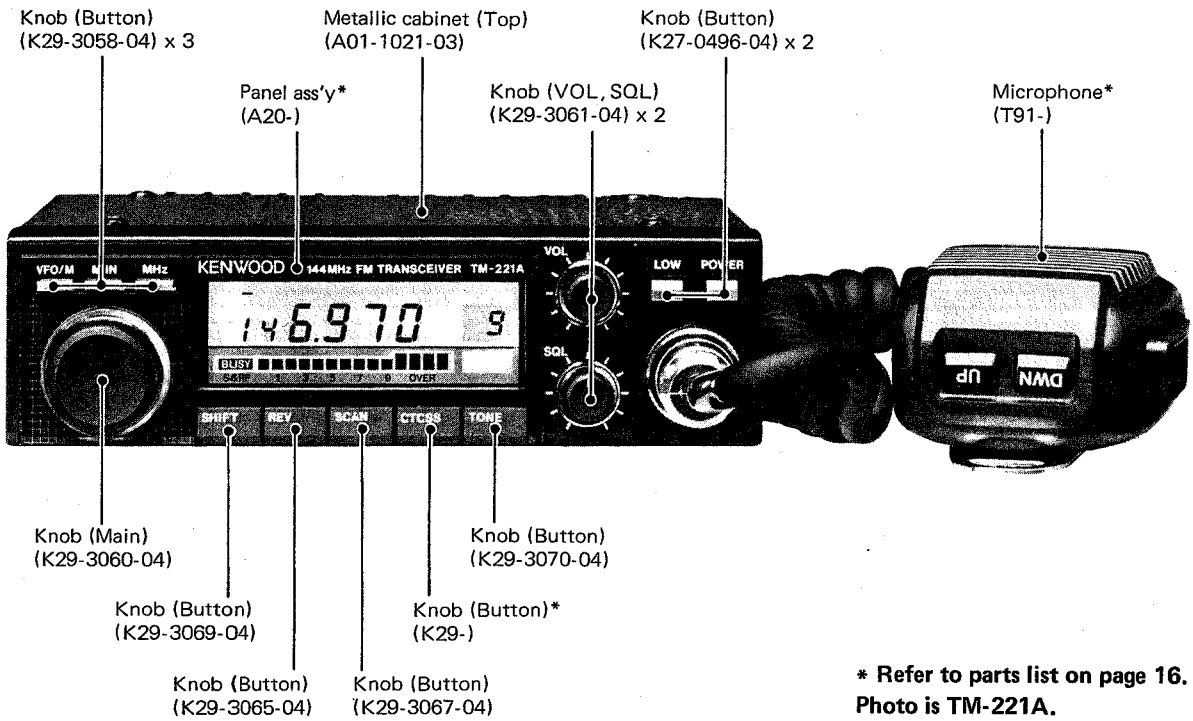

*** Refer to parts list on page 16.**
Photo is TM-221A.

CONTENTS

CIRCUIT DESCRIPTION

MODEL / UNIT	TM-221A (45W)			TM-221E (10W)		TM-221ES (45W)	
	K	M1	M2	T1	W1	T2	W2
Final unit	X45-1360-02			X45-1330-03		X45-1360-02	
Control unit	X53-3040-11	X53-3040-21	X53-3040-22	X53-3040-51	X53-3040-61	X53-3040-51	X53-3040-61
TX-RX unit	X57-3060-11			X57-3060-51		X57-3060-52	

Table 1 Comparison of TM-221A, TM-221E and TM-221ES

Frequeny configuration

The TM-221A/E/ES utilize a PLL synthesizer system incorporating a digital VFO. (See **Fig. 1**.) The channel step can be selected as 5, 10, 12.5 **(T,W)**, 15, 20, or 25kHz.

The receiver operates as a double conversion system. Received signals are mixed with the first local oscillator (133.305~137.300MHz **(K,M)**, 133.300~135.295MHz **(T,W)**) to produce the first intermediate frequency of 10.695MHz **(K,M)**, 10.7MHz **(T,W)**. The first intermediate frequency is mixed with the second local oscillator (10.24 MHz **(K,M)**, 10.245MHz **(T,W)**) to produce the second intermediate frequency of 455kHz.

The transmitter system consists of a PLL circuit incorporating a direct oscillator and direct divider. The output is amplified by a linear amplifier prior to being transmission.

Receiver system

- **General**

Incoming signals from the antenna pass through a low-pass filter in the Transmitter Final unit and a diode transmit/receive switch, then enter the receiver front end.

After passing through two antenna coils the signals are amplified by a GaAs (galium arsenide) FET (Q1 : 3SK184(S). Undesired signals are removed by 3 tuning coils (L19~L21 : **K,M**) or a 3-pole helical resonator (L3 : **T,W**). The resulting signal is applied to the first mixer Q2 : 3SK131(V12), which employs an N channel MOS FET to obtain good 2-signal characteristics. In the first mixer (Q2) the signal is mixed with the first local oscillator from the PLL system to produce the first IF signal of 10.695MHz **(K,M)**, 10.7MHz **(T,W)**. Interfering Adjacent channel interference is removed from the first IF signal by a two-stage monolithic crystal filter (MCF) (L6).

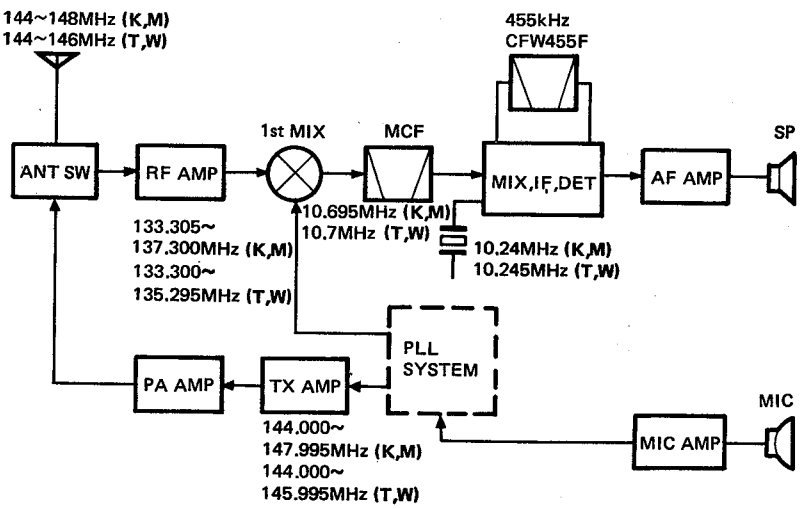

Fig. 1 Frequency configuration

 TM-221A/E/ES

CIRCUIT DESCRIPTION

The first IF signal is amplified by Q3 : 2SC2714(Y) and fed to a special narrow-FM IC (TA7761F). Here the signal is mixed with the 10.24MHz **(K,M)**, 10.245MHz **(T,W)** frequency from the second local oscillator to produce the 455kHz second IF signal. This signal is sharpened by passing it through a six-element ceramic filter (CFW455F). The signal is then amplified by a five-stage limiting amplifier contained in IC1. This is followed by quadrature detection which is also performed by IC1. Undesirable high-frequency components are removed from the detected signal by an active low-pass filter. The signal then passes through the audio volume control, then is amplified by the audio power amplifier (IC4), and applied to the speaker. The circuit configuration from detection onward is shown in **Fig. 2**.

- **Squelch circuit**

The noise component extracted from the detector output is filtered to remove the second intermediate frequency component (455kHz), amplified twice, and is then fed to the rectifier. After rectification, the signal passes through the squelch control to the audio limiter circuit.

- **S-meter circuit**

The S-meter output voltage of the special narrow-FM IC (TA7761F) is amplified by an inverting amplifier, then fed to the Control unit. The microprocessor converts the analog voltage to a digital signal that is used to control the LCD bar meter.

Item	Rating
Nominal center frequency (fo)	10.695MHz
Pass bandwidth	±7.5kHz or more at 3dB
Attenuation bandwidth	±25kHz or less at 40dB ±45kHz or less at 60dB
Guaranteed attenuation	70dB or more within ±1MHz 40dB or more spurious at fo~fo + 500kHz 80dB or more spurious at fo−(910± 10kHz)
Ripple	1.0dB or less
Insertion loss	1.5dB or less
Terminating impedance	3kΩ/0pF

Table 2-1 MCF (L71-0216-05) characteristics (TX-RX unit L6 : K,M type)

Item	Rating
Nominal center frequency (fo)	10.7MHz
Pass bandwidth	±7.5kHz or more at 3dB
Attenuation bandwidth	±25kHz or less at 40dB ±45kHz or less at 60dB
Guaranteed attenuation	70dB or more within ±1MHz, (Spurious response 40dB or more at fo~fo+500kHz) 80dB or more at fo−(900~920kHz)
Ripple	1.0dB or less
Insertion loss	1.5dB or less
Terminal impedance	3kΩ/0pF

Table 2-2 MCF (L71-0228-05) characteristics (TX-RX unit L6 : T,W type)

Item	Rating
Nominal center frequency	455kHz±1kHz
6dB bandwidth	±6kHz or more (from 455kHz)
50dB bandwidth	±12.5kHz or less (from 455kHz)
Ripple (within 455±4kHz)	3dB or less
Insertion loss	6dB or less
Guaranteed attenuation (within 455±100kHz)	35dB or less
I/O impedance	2.0kΩ

Table 3 Ceramic filter CFW455F (L72-0315-05) characteristics (TX-RX unit L10)

CIRCUIT DESCRIPTION

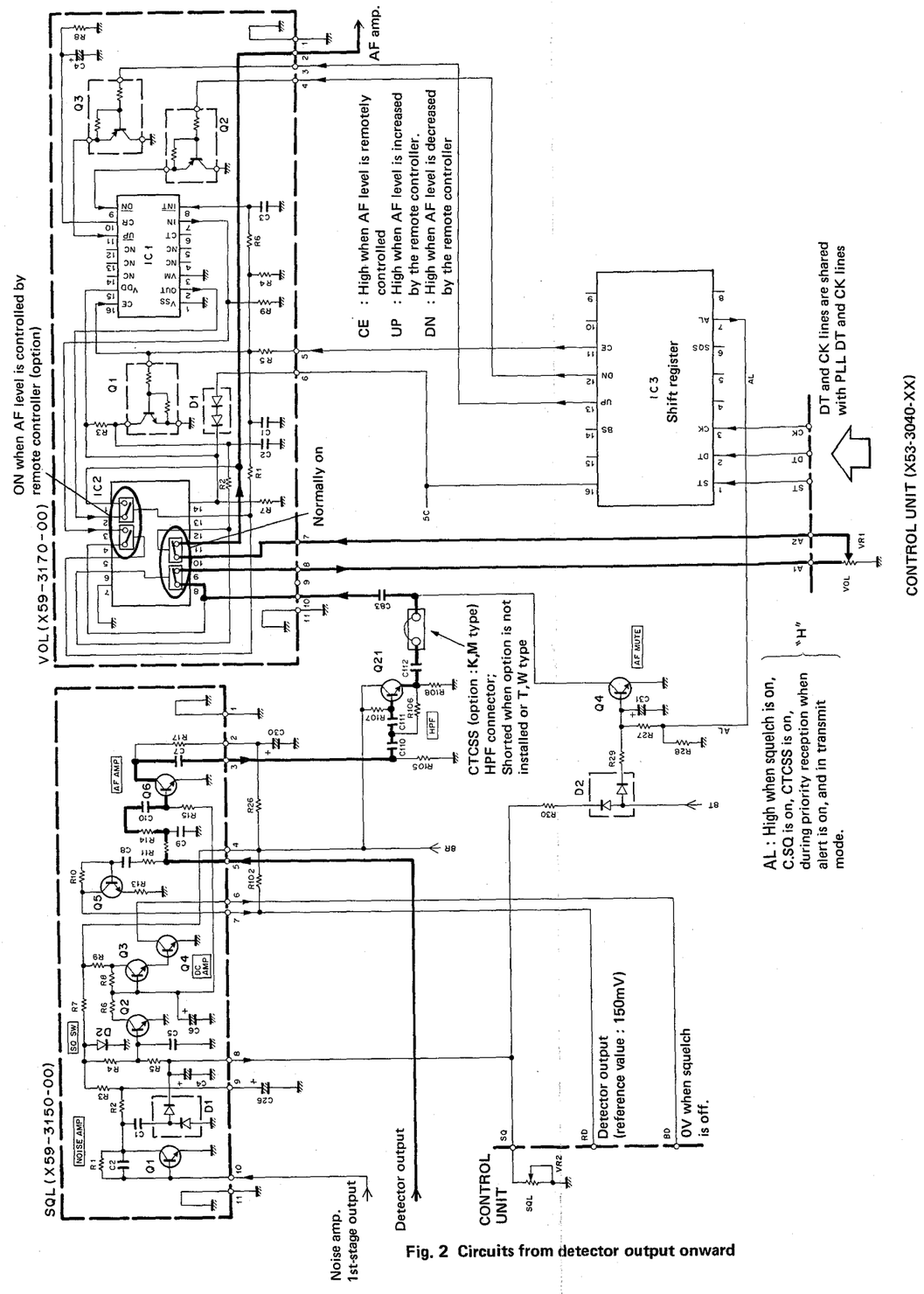

Fig. 2 Circuits from detector output onward

 TM-221A/E/ES

CIRCUIT DESCRIPTION

Transmitter system

- **General**

In the transmitter system the desired frequency is produced directly by an oscillator. Frequency modulation is obtained directly thru the use of a varactor diode.

- **Modulation circuit**

Audio signals from the microphone are applied to a three-stage operational amplifier which adds preemphasis, performs amplification and limiting, and includes a splatter filter to remove undesired high-frequency components. After amplification by the operational amplifier, part of the audio signal is applied to the microphone check circuit used in the low-power mode.

In the FM modulation circuit, the frequency of the VCO is directly modulated by a varactor diode.

- **Preamplifier stage circuit**

The output from the VCO enters the linear amplifier, which is capable of high-quality signal amplification because it operates entirely in linear mode. APC, (Automatic Power Control) is performed by controlling the collector voltage of the 3 stage final preamplifier stage.

- **Power amplifier circuit**

The drive signal is applied to the power module and amplified to the required level. In the model TM-221A/ES heat is dissipated efficiently by a large mechanically strong heatsink.

- **APC and SWR protection circuits**

Fig. 3 shows the basic ALC (Automatic Level Control) and SWR (Standing Wave Ratio) protection circuits. The SWR protection circuit incorporates a CM coupler that detects any reflected power caused by mismatching of the antenna. After detection and amplification, this circuit acts to lower the output control voltage, which protects the power module by reducing the gain. The automatic power control (APC) circuit incorporates a diode that is used to detect a portion of the output from the power module. The detected signal is amplified and is then used to control the power control voltage. The control voltage is inversely proportional to the output, so a constant output level is maintained.

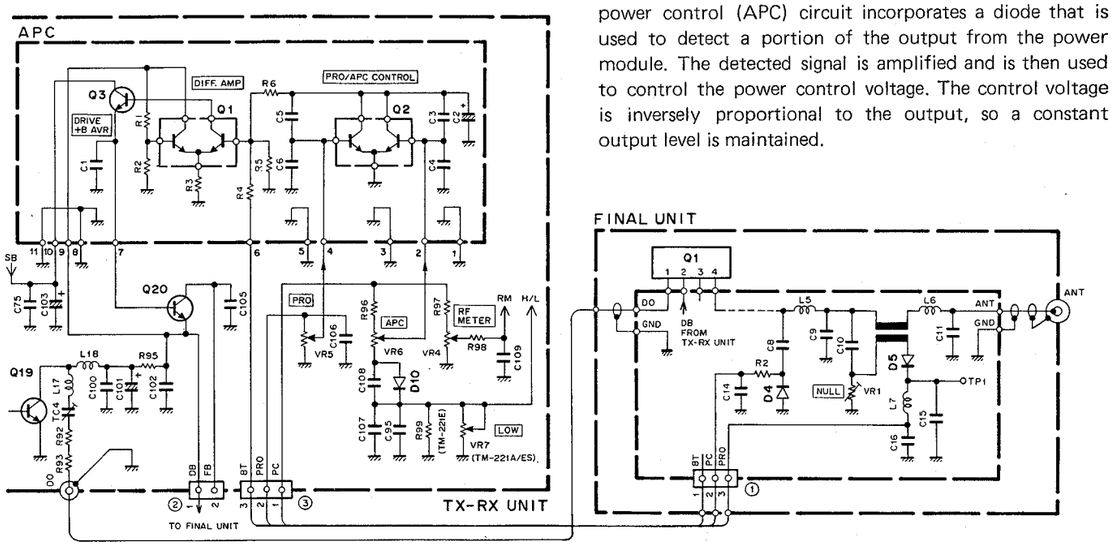

Fig. 3 APC and SWR protection circuits

Item	Symbol	TC (°C)	Unit	Condition	Specifications	
					M57747	M57726
Operating voltage	Vcc	25	V		17	17
Current consumption	Icc	25	A		5	14
Input power	pin	25	W	$Z_G=Z_L=50\Omega$	0.4 ($V_{CC1}\leqq 12.5V$)	0.6
Output power	Po	25	W	$Z_G=Z_L=50\Omega$	20	55
Case temperature (operating)	Tc(op)		°C		−30~+110	−30~+110
Storage temperature	Tstg		°C		−40~+110	−40~+110

Table 4 Power module M57747 (TM-221E), M57726 (TM-221A/ES) absolute maximum ratings (Final unit Q1)

CIRCUIT DESCRIPTION

PLL synthesizer

Fig. 4 is the PLL system block diagram. The transmitter and receiver systems of the TM-221A/E/ES have independent VCOs and PLLs, but share a common low-pass filter.

The VCOs are configured as subunits. This construction minimizes outside influence and improves frequency stability.

To provide 5, 10, 12.5 **(T,W)**, 15, 20, and 25kHz steps, a comparison frequency of 5kHz or 6.25kHz **(T,W)** is obtained by dividing the 10.24MHz **(K,M)**, 12.8MHz **(T,W)** frequency of the reference oscillator by 2048 or 2560 **(T,W)**. In both the transmitter and receiver systems the target frequency is produced directly by the VCO, passed through one amplifier stage, then applied to a pulse-swallow PLL IC that divides the frequency, performs phase comparison, and locks the frequency.

The reference frequency division ratios (four values) and comparison frequency divison ratio are supplied to the PLL IC (M54959P) as external serial data. An internal dual-modulus (1/128 and 1/129) prescaler enables the entire pulse-swallow PLL circuit to be implemented on a single chip. (See **Fig. 5**.) The switching functions (SW1 and SW2) of the PLL IC are used to switch between the 8R (receive) and 8T (transmit) operating voltages in the transmit and receive modes.

The switch controls are applied together with frequency division ratio data from the Control unit.

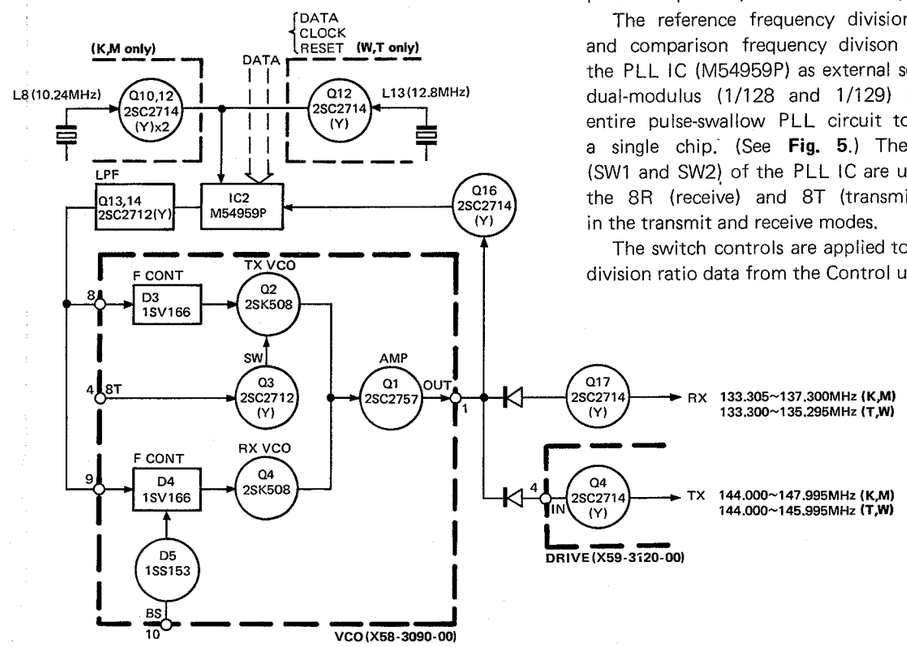

Fig. 4 PLL system block diagram

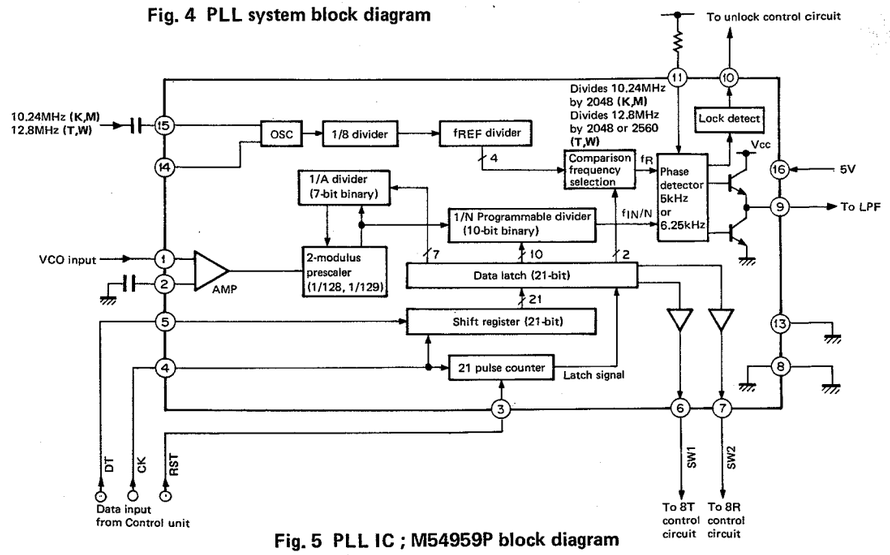

Fig. 5 PLL IC ; M54959P block diagram

CIRCUIT DESCRIPTION

At 144MHz **(K,M)**, f_{VCO} (RX) has the following relationship to the various frequency division ratios :

$f_{VCO}=(144-10.695)=[(n \times 128)+A] \times fosc/R$

where, f_{VCO} : Frequency output by the VCO

n : 10-bit binary programmable counter setting

A : 7-bit binary programmable counter setting

fosc : 10.24MHz reference oscillator

R : 14-bit binary programmable counter setting (2048)

If n=208 and A=37, then;

$f_{VCO}=[(208 \times 128)+37] \times 10240/2048$

$=[26624+37] \times 5$

$=133305kHz=133.305MHz$

- **Unlock detector circuit**

Whenever the PLL is unlocked, pin 10 of the PLL IC goes high ("H") (5.5V), turning off Q15 so that Q1 and Q2 in the module unit (drive unit) turn OFF. The result is that during receive Q17 is OFF, and during transmit Q4 and Q5 in the module unit are OFF. This halts transmit, preventing unwanted radiation from the antenna. (See **Fig. 6.**)

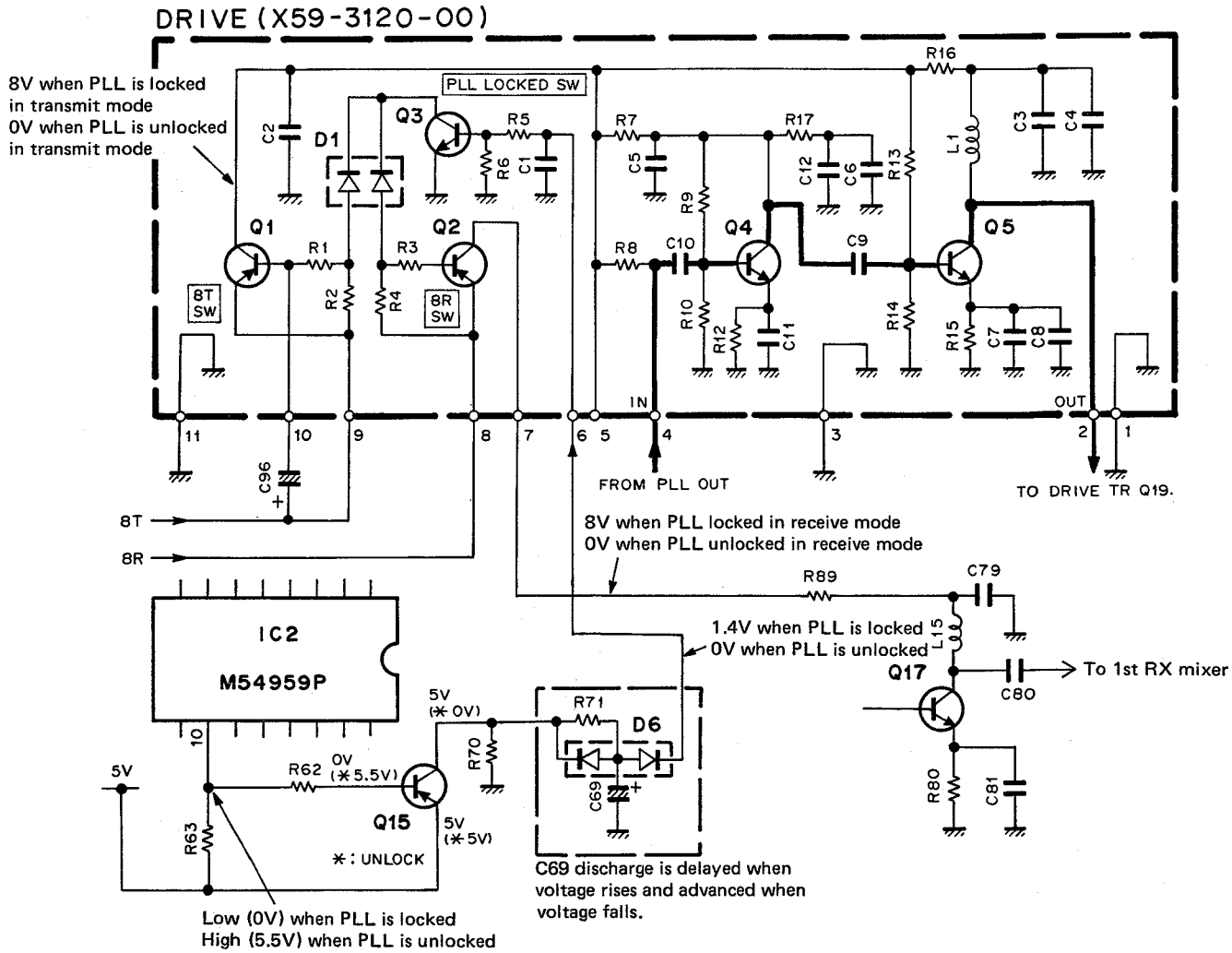

Fig. 6 PLL unlock detector circuit

CIRCUIT DESCRIPTION

Digital control unit

- **General**

The control unit consists of a microprocessor, input keys, peripheral circuits, and a display. The single microprocessor (IC3) controls all transceiver functions. The pin assignments of the microprocessor are listed on the **Table 6.**

- **Keys and rotary encoder input circuits**

Fig. 7 shows the input circuit for the keys and rotary encoder. Data from the front panel keys, microphone keys, and rotary encoder are applied directly to the microprocessor.

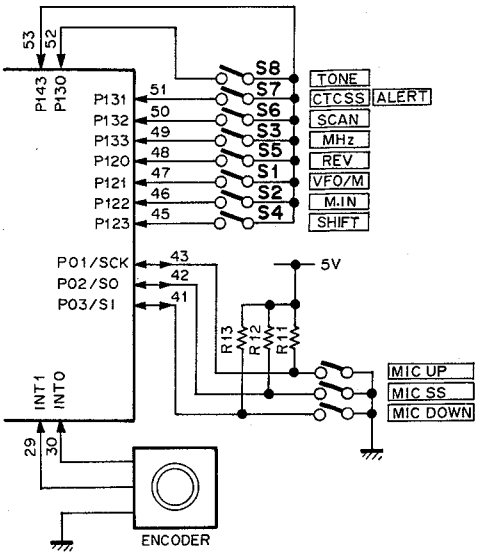

Fig. 7 Key and rotary encoder input circuits

Terminal No.	Name	I/O	Logic	Function
1	P41	O	–	Digital output of D-A conv.
2	P40	O	–	
3	P53	O	–	
4	P52	O	–	
5	P51	O	–	
6	P50	O	–	
7	$\overline{\text{RESET}}$	I	L	Reset input.
8	X2	–	–	4.194304MHz crystal oscillator.
9	X1	–	–	
10	P63	–	–	Not used.
11	P62	–	–	
12	P61	O	↑	CTCSS shift register reset **(K,M)**
13	P60	I	L	Model setting : "L" for 144MHz "H" for 430MHz band.
14	P73	O	–	LCD driver data.
15	P72	O	↑	LCD driver clock.
16	P71	O	H	LCD driver enable.
17	P70	–	–	Not used.
18	P83	I	L	Directional input.
19	P82	I	L	
20	P81	I	L	
21	P80	I	L	
22	P93	O	–	Not used.
23	P92	O	↓	PLL and shift register clock.
24	P91	O	–	PLL and shift register data.
25	P90	O	L	PLL enable.
26	Vss	–	–	GND terminal (0V).
27	P13	I	L	BUSY input.
28	INT2	I	–	Encoder input.
29	INT1	I	–	
30	INT0	I	H	Remote connection detect input (only when connected).
31	PTH03	I	–	Not used.
32	PTH02	I	–	
33	PTH01	I	–	RF meter analog input.
34	PTH00	I	–	S meter analog input.

Terminal No.	Name	I/O	Logic	Function
35	TI1	–	–	Not used.
36	TI0	–	–	
37	P23	O	–	
38	P22	O	H	Squelch control during remote control.
39	P21	O	H	Shift register strobe.
40	PT00	O	–	Beep oscillator output.
41	P03/SI	I/I	L/–	Microphone DOWN switch input/ serial data input.
42	P02/SO	I/O	L/–	Microphone PTT switch input/ serial data input.
43	P01/$\overline{\text{SCK}}$	I/–	L/–	Microphone UP switch input/ serial data input.
44	INT4	I	–	Backup detect input.
45	P123	I	L	SHIFT switch input.
46	P122	I	L	M.IN switch input.
47	P121	I	L	VFO/M select switch input.
48	P120	I	L	REV switch input.
49	P133	I	L	Frequency step select switch input.
50	P132	I	L	SCAN switch input.
51	P131	I	L	CTCSS switch input **(K,M)**. Alert switch input **(T,W)**.
52	P130	I	L	TONE switch input.
53	P143	O	–	Pull-down pin.
54	P142	O	–	Not used.
55	P141	O	–	
56	P140	O	–	
57	NC	–	–	
58	VDD	–	–	Power supply pin (5V).
59	P33	–	–	GND terminal (0V).
60	P32	I	H	Tone detect input (when CTCSS is on **(K,M)**.
61	P31	O	–	CTCSS IC data **(K,M)**.
62	P30	O	↑	CTCSS IC clock.
63	P43	O	–	DAC digital data output.
64	P42	O	–	

Table 5 μPD75106G-508-1B pin assignments (Control unit IC3)

CIRCUIT DESCRIPTION

- **Display circuit**

Located in the LCD assembly (**Fig. 8**), the display circuit consists of the LCD driver, its peripheral circuits, and the LCD. The LCD is driven with a 50% duty cycle according to serial data sent from pins P71 to P73 of the microprocessor to the LCD driver. **Fig. 9** shows the common output and segment output signals of the LCD driver.

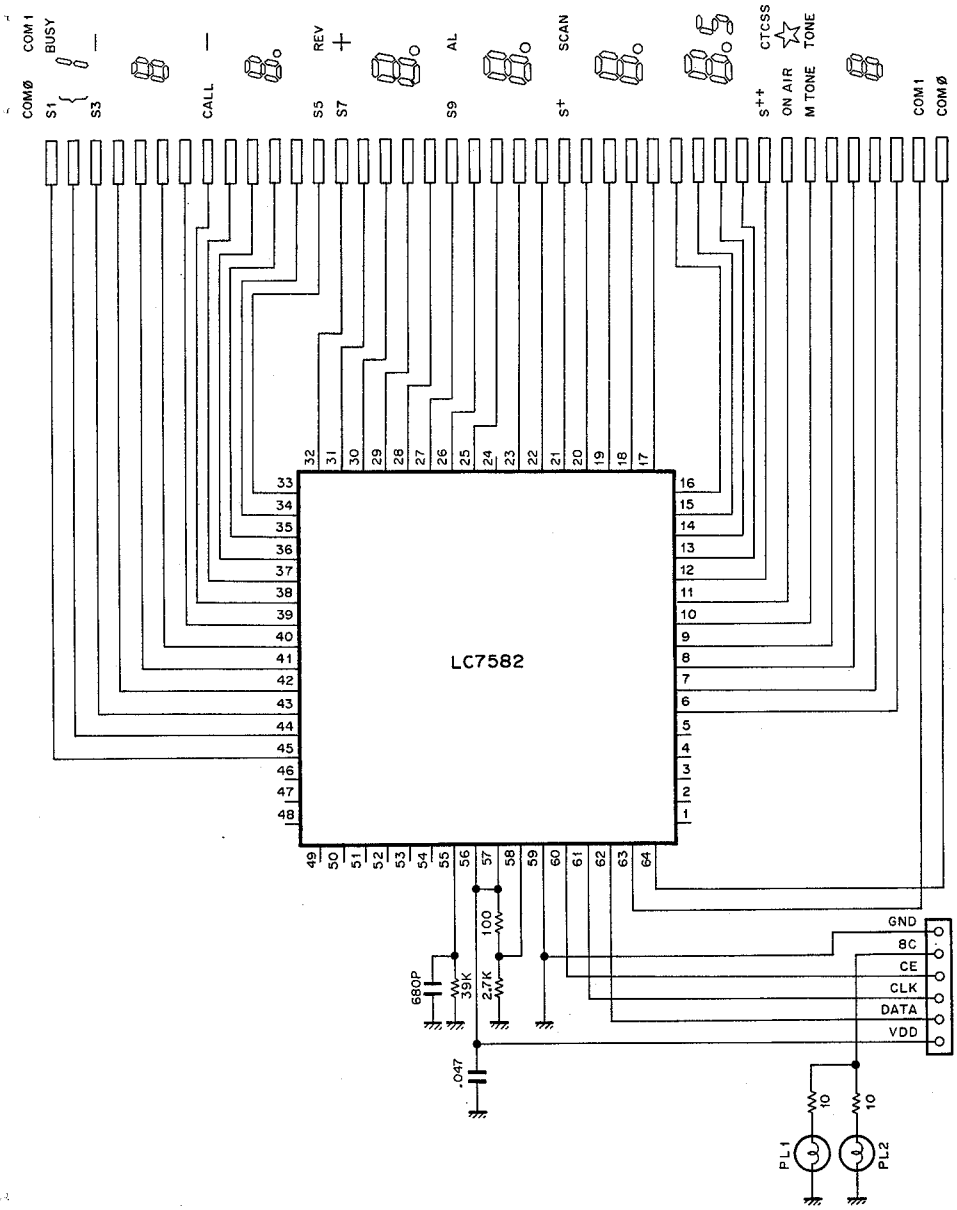

Fig. 8 LCD ass'y (B38-0303-05)

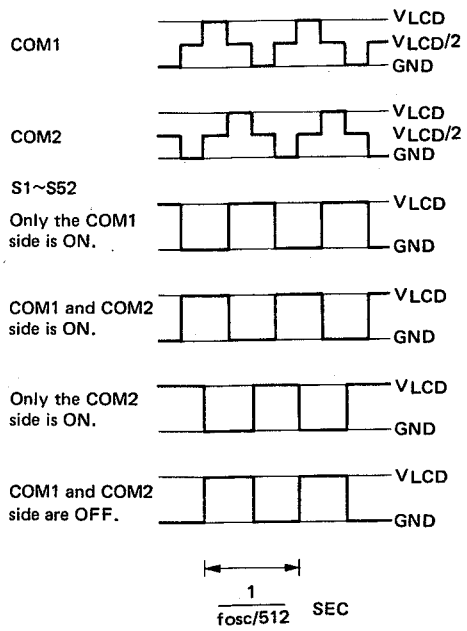

Fig. 9 LCD driver common and segment output signals

CIRCUIT DESCRIPTION

- **Reset backup circuit**

Fig. 10 shows the reset backup circuit. When the transceiver is turned ON, 3.0V is applied at the INT4 pin causing IC3 to enter the backup mode.

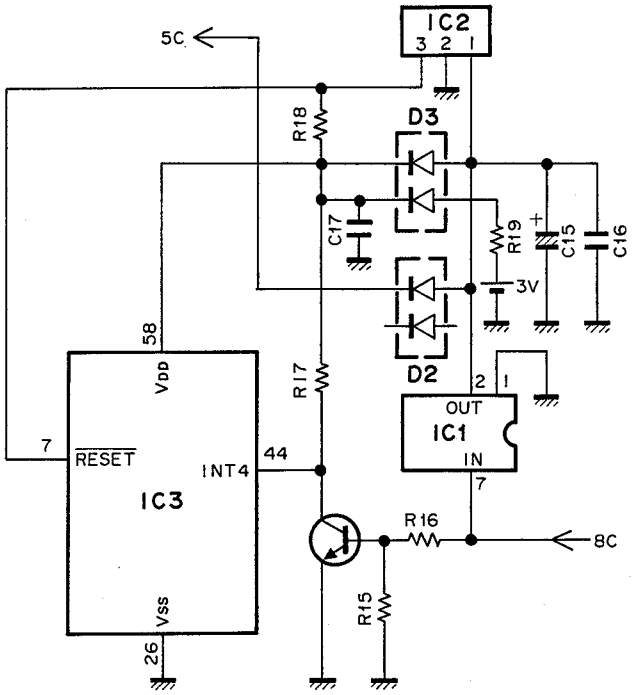

IC2 timing chart

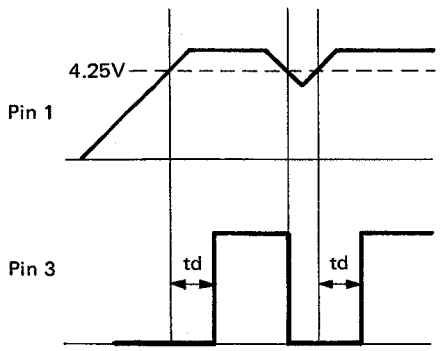

Fig. 10 Reset and backup circuit

- **PLL data output**

PLL data is supplied from pins P92 (CK), P91 (DT), and P90 (RST) of the microprocessor. **Fig. 11** shows the data transfer format. **Fig. 12** shows the data configuration.

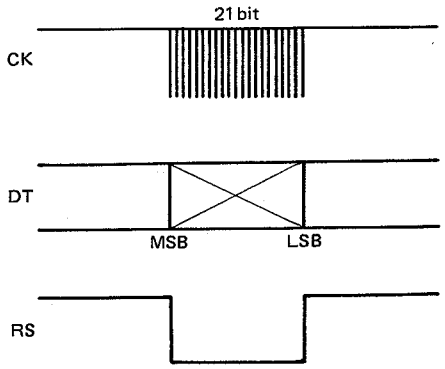

Fig. 11 PLL data transfer format

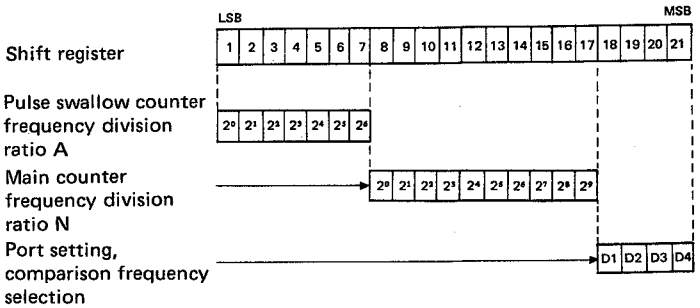

The 21-bit data is converted by the procedure below.

1. **Frequency division ratio data A, N (17 bits)**
   F (RX display—10.695MHz)=
   [(N X 128) + A] X 10.24MHz/ref (**K, M**)
   F (RX display – 10.7MHz) =
   [(N X 128) + A] X12.8MHz/ref (**T, W**)
   N : Frequency division ratio of main 10-bit counter
   A : Frequency division ratio of 7-bit pulse swallow counter

2. **Comparison frequency (ref) selection (2 bits)**

Data		Phase comparison frequency	
D1	D2		
L	L	5kHz	5, 10, 15, 20 or 25k Hz steps
H	L	6.25kHz	12.5kHz step

3. **Switch selection (2 bits)**

Data		Output port		
D3	D4	SW1	SW2	
H	L	H	L	RX mode
L	H	L	H	TX mode

Fig. 12 PLL data configuration

CIRCUIT DESCRIPTION

- **Alert and electronic volume control output (when optional remote controller is connected)**

The alert and electronic volume control outputs are provided by pins P92 (CK), P91 (DT), and P21 (ST) of the microprocessor to the 8-bit shift register (IC3) in the TX-RX unit. P92 (CK) and P91 (DT) are also used for the PLL data. **Fig. 13** shows the data transfer format. **Fig. 14** shows the data configuration.

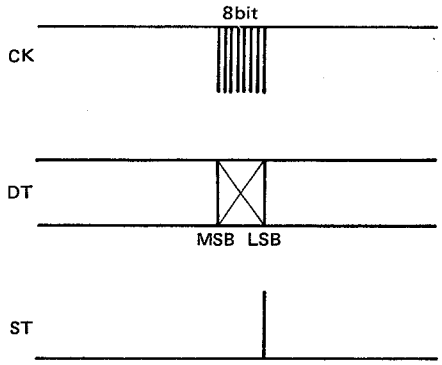

Fig. 13 Data transfer format for alert and electronic volume control

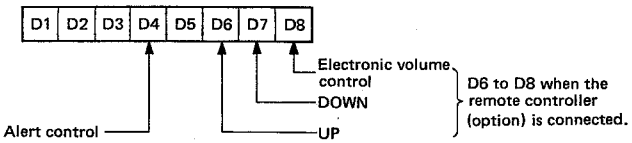

Fig. 14 Data configuration for alert and electronic volume control

- **Tone output**

The outputs from pins P40 to P43 and P50 to P53 of the microprocessor are applied to a ladder resistance network (IC4) which converts these signals into an analog waveform with 38 possible tone frequencies combinations 67.0 to 250.3Hz. **Fig. 15** shows the internal configuration of IC4.

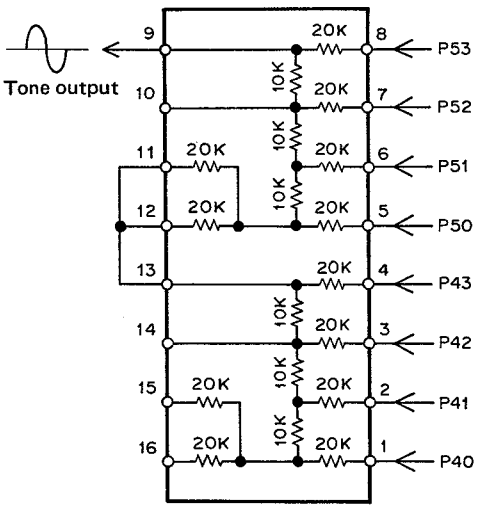

Fig. 15 Internal configuration of KRR-C001 ladder resistance network (Control unit IC4)

- **S-meter and RF meter input**

The analog voltage of the S-meter is applied to pin PTH00 of the microprocessor, and the analog voltage of the RF meter to pin PTH01. After 4-bit (16-step) analog-to-digital conversion, the resulting signal is sent to the display.

- **Busy input**

When squelch is ON and an input signal is present, a low input lights the busy indicator.

- **CTCSS unit (option : TM-221A only) input and output**

The microprocessor sends data from pins P30, P31, and P61 to the CTCSS unit. **Fig. 16** shows the data transfer format. **Fig. 17** shows the data configuration. When a tone is detected from the CTCSS unit, a "H" is applied to pin P32 of the microprocessor to open the squelch.

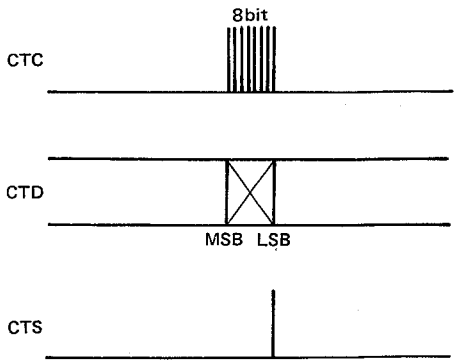

Fig. 16 CTCSS data transfer format

CTCSS unit MN6520 tone frequency select data

	D1	D2	D3	D4	D5	D6
Ex. 88.5Hz	L	H	L	H	H	H

Fig. 17 CTCSS data configuration

- **Remote control (RC-10) (option) input and output**

When the RC-10 remote control unit is connected a "H" is applied to pin INT0 of the microprocessor, switching the following pins to the functions indicated:

P03 → SI : Serial data input pin
P02 → SO : Serial data output pin
P01 → $\overline{\text{SCK}}$: Serial clock input/output pin

SEMICONDUCTOR DATA

Electronic volume LC7532M (VOL IC1)

- **Electric characteristics**

Item	Symbol	Conditions	Specifications			Unit
			Min.	Typ.	Max.	
High-frequency distortion	THD1	V_{DD}=3V, R_L=50kΩ, f=1kHz, VR MAX, V_{IN}=−20dBV		0.1	0.5	%
	THD2	V_{DD}=2.1V, R_L=50kΩ, f=1kHz, VR MAX, V_{IN}=−20dBV		0.3	1.0	%
Output in low-power mode	X OUT	At 0dBm input : f=1kHz, R_L=51kΩ		−95	−60	dB
Input impedance	R IN	$\overline{UP}$, $\overline{DN}$, CE	100		400	kΩ
Current consumption	IDD (1)	V_{DD}=3V when operating		0.035	1	mA
	IDD (2)	VDD=3V, CE="L"		4		μA

- **Block diagram**

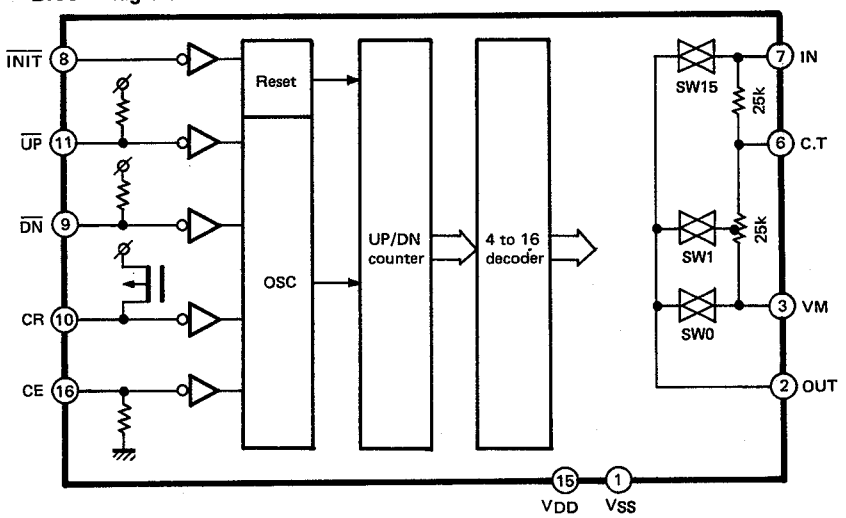

DESCRIPTION OF ELEMENTS

FINAL UNIT (X45-1330-03) : TM-221E, (X45-1360-02) : TM-221A/ES

Element	Function	Description
Q1	Power amplifier	Boosts power to the required level. M57747 in TM-221E, M57726 in TM-221A/ES.
D1	Protection against reverse power connection	
D2,D3	Transmit/receive select	ON during transmit.
D4	High-frequency output voltage level detect	Detects high-frequency output level and controls output in the APC circuit.
D5	Reflected power detector	Adjustable with VR1.

CONTROL UNIT (X53-3040-XX)

Element	Function	Description
IC1	6V AVR	
IC2	Reset IC	Outputs Reset signal and detects low voltage.
IC3	Microprocessor	Controls frequencies and general set functions.
IC4	Tone DAC	Converts digital data from IC3 (P40 to P43, P50 to P53) to an analog tone frequency.
Q1	Squelch switching	Switches squelch on/off when remote controller is connected.
Q2	Switching	Controls the microprocessor's backup detect input.
D1	Reverse current protection	Protects against external voltage applied to pin 5 of the microprocessor.
D2(1/2)	Microprocessor protection	Protects against static surge.
D2(2/2)	Voltage drop	
D3(1/2)	Reverse current protection	Prevents current from flowing to the backup battery.
D3(2/2)	Reverse current protection	Prevents backup battery current from flowing to inappropriate circuits.
D4	Microprocessor protection	Protects against static surge.

TX-RX UNIT (X57-3060-XX)

Element	Function	Description
IC1	8V AVR	
IC2	PLL	Pulse-swallow type phase-locked loop.
IC3	Shift register	Controls alert **(T,W)**, band switching, and electronic volume functions.
IC4	AF amplifier	Speaker output.
Q1	High-frequency amplifier	Operates in receive mode (144MHz).
Q2	First mixer	Converts the 2 meter-band received frequency into the 10.695MHz **(K,M)** 10.7MHz **(T,W)**.
Q3	High-frequency amplifier	First intermediate frequency amplifies.
Q4	AF muting	Operates when CTCSS is ON **(K,M)**, during priority reception when alert is ON **(T,W)**, when SQS is high, and in transmit mode.
Q5	8R switching	ON in receive mode.
Q6	8T switching	ON in transmit mode.
Q7	8T switching control	ON in transmit mode.
Q8	8R switching control	ON in receive mode.
Q9	Constant-voltage control	5V power supply for PLL.
Q10	Buffer amplifier	Buffer amplifier for Q12, which amplifies the 10.24MHz crystal oscillator **(K,M)**.
Q11	High-frequency amplifier	Amplifies 12.8MHz to the level required for the PLL **(T,W)**.
Q12	High-frequency amplifier	Amplifies 10.24MHz to the level required for the PLL **(K,M)**.
Q13,Q14	PLL low-pass filter	
Q15	PLL unlock control	ON when the PLL is locked.
Q16	High-frequency amplifier	Amplifies the VCO output to the level required for the PLL.
Q17	High-frequency amplifier	Amplifies the VCO output to the level required for input to the 1st IF mixer (Q2).
Q18	Inverting amplifier	Inverts the output from the BS port of the shift register (HI/LO → LO (0V)/HI (8V).
Q19	Transmit driver (power amplifier)	Amplifies to the level required for input to the final unit power module.
Q20	+ B (DB) AVR of Q19	Operates in transmit mode.

DESCRIPTION OF ELEMENTS

Element	Function	Description
Q21	High-pass filter	Improves AF frequency characteristics in the receive mode.
D1	Limiting	Limits the first IF signal.
D2	Reversal current protection	Turns on the SQ circuit and Q4 for AL, in transmit mode for muting of the AF line.
D3	Reversal current protection	Prevents flow of RF meter current to the microphone check circuit and rectifies the microphone check output.
D4	Discharge	For discharging any residual charge on the 8T line.
D5	AVR	Zener diode for setting the AVR circuit reference voltage.
D6	Switching characteristic	Diode to provide rise and fall hysteresis on the LD line.
D7	VCO output switch	Reduces the drive circuit load in receive mode.
D8	VCO output switch	Reduces the oscillator load in transmit mode.
D9	Temperature compensation	Temperature compensation for Q19 (driver).
D10	Temperature compensation	Temperature compensation for APC circuit.
D11~D13	Wideband RF amplifier	Varicap-diode of the RF tuning circuit.
D14,15	S-meter circuit protection	Protect for S-meter circuit when TX to RX mode.

VCO (X58-3090-00)

Element	Function	Description
Q1	Amplifier	Operates in all modes to amplify the VCO output to the required level.
Q2	Transmit VCO	Operates in transmit mode as the PLL VCO (144MHz band).
Q3	Transmit VCO switch	Turns on the transmit VCO.
Q4	Receive VCO	Operates in receive mode as the PLL VCO.
D1	OR circuit	ORs 8T and 8R to operate Q1 at normal temperature.
D2	Transmit modulation varactor	Adds FM modulation to TX VCO.
D3	Transmit frequency control varactor	
D4	Receive frequency control varactor	
D5	Band switch	Expands the receive band by switching for 138 to 152.995MHz (low) and 153 to 173.995MHz (high) signals.

DRIVE (X59-3120-00)

Element	Function	Description
Q1	Switching	Supplies 8V to the drive circuit; switched by Q3.
Q2	Switching	Supplies 8V to the local oscillator amplifier; switched by Q3.
Q3	Switching	ON when the PLL is locked.
Q4,Q5	High-frequency amplifier	Operates in transmit mode. When checking levels near these transistors, be careful of the probe ground points.
D1	Reversal current protection	Separates Q1 and Q2.

APC (X59-3130-00)

Element	Function	Description
Q1	Differential amplifier	
Q2(1/2)	Protection control	Adjustable with VR5.
Q2(2/2)	APC control	Adjustable with VR6.
Q3	Drive stage + B AVR	

IF (X59-3140-00)

Element	Function	Description
IC1	Second local oscillator, mixer, IF amplifier, quadrature detector, noise amplifier	⑦ S-meter output. ⑪ Noise amplifier output (first stage). ⑨ Detector output ⑯ First IF signal input.

DESCRIPTION OF ELEMENTS

SQL (X59-3150-00)

Element	Function	Description
Q1	Noise amplifier	
Q2	Squelch switching	ON when squelch is on.
Q3,Q4	DC amplifier	OFF when squelch is on.
Q5	Low-frequency amplifier	For RD terminal.
Q6	Low-frequency amplifier	OFF when squelch is on.
D1	Squelch noise rectifier	
D2	Base bias setting	

MIC (X59-3160-00)

Element	Function	Description
IC1(1/2)	Low-frequency amplifier	① Output, ② Input.
IC1(2/2)	Low-frequency amplifier	For microphone check. ⑥ Input ⑦ Output.
IC2(1/2)	Limiting amplifier	① Output ② Input.
IC2(2/2)	LPF	⑥ , ⑦ Output.

VOL (X59-3170-00)

Element	Function	Description
IC1	Electronic volume control (16 steps, initialized to the 6th step from the bottom)	② Output. ⑦ Input. ⑧ Initialize input : "L" → step 6. ⑨ Increase ("L" input raises the volume 1 step). ⑪ Decrease ("L" input lowers the volume 1 step). ⑯ "H" while operating.
IC2	Bidirectional switch (4 circuits)	① – ② controlled by ⑬ . ③ – ④ controlled by ⑤ . ⑧ – ⑨ controlled by ⑥ . ⑩ – ⑪ controlled by ⑫ .
Q1	Bidirectional switch enable	ON to enable electronic volume control.
Q2	Switching	ON to decrease by 1 step.
Q3	Switching	ON to increase by 1 step.
D1	Voltage drop	

PARTS LIST

CAPACITORS CC 45 TH 1H 220 J
1 2 3 4 5 6

1 = Type ..... ceramic, electrolytic, etc.
2 = Shape .....round, square, etc.
3 = Temp. coefficient
4 = Voltage rating
5 = Value
6 = Tolerance

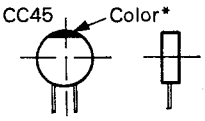

- **Capacitor value**

0 1 0 = 1pF
1 0 0 = 10pF
1 0 1 = 100pF
1 0 2 = 1000pF = 0.001μF
1 0 3 = 0.01μF

2 2 0 = 22pF
1st number | Multiplier
2nd number

- **Temperature Coefficient**

1st Word	C	L	P	R	S	T	U
Color*	Black	Red	Orange	Yellow	Green	Blue	Violet
ppm/°C	0	−80	−150	−220	−330	−470	−750

2nd Word	G	H	J	K	L
ppm/°C	± 30	± 60	± 120	± 250	± 500

Example CC45TH = −470±60 ppm/°C

- **Tolerance**

Code	C	D	G	J	K	M	X	Z	P	No code
(%)	± 0.25	± 0.5	± 2	± 5	± 10	± 20	+ 40 −20	+ 80 −20	+ 100 −0	More than 10μF −10~+50 Less than 4.7μF −10~+75

Less than 10 pF

Code	B	C	D	F	G
(pF)	± 0.1	± 0.25	± 0.5	± 1	± 2

- **Rating voltage**

1st word \ 2nd word	A	B	C	D	E	F	G	H	J	K	V
0	1.0	1.25	1.6	2.0	2.5	3.15	4.0	5.0	6.3	8.0	–
1	10	12.5	16	20	25	31.5	40	50	63	80	35
2	100	125	160	200	250	315	400	500	630	800	–
3	1000	1250	1600	2000	2500	3150	4000	5000	6300	8000	–

- **Chip capacitors**

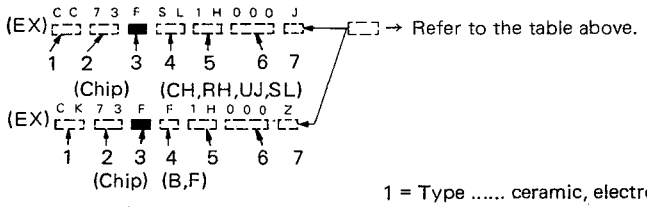

Dimension

Dimension code	L	W	T
Empty	5.6 ± 0.5	5.0 ± 0.5	Less than 2.0
E	3.2 ± 0.2	1.6 ± 0.2	Less than 1.25
F	2.0 ± 0.3	1.25 ± 0.2	Less than 1.25

RESISTORS

- **Chip resistor (Carbon)**

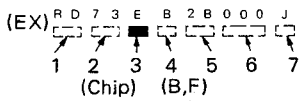

1 = Type ..... ceramic, electrolytic, etc.
2 = Shape ..... round, square, etc.
3 = Dimension
4 = Temp. coefficient
5 = Voltage rating
6 = Value
7 = Tolerance.

Dimension

Dimension code	L	W	T	Wattage
E	3.2 ± 0.2	1.6 ± 0.2	0.57	2B
F	2.0 ± 0.3	1.25 ± 0.2	0.45	2A

- **Carbon resistor (Normal type)**

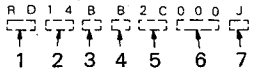

Rating wattage

Cord	Wattage	Cord	Wattage	Cord	Wattage
2A	1 /10W	2E	1/ 4W	3A	1W
2B	1/ 8W	2H	1/ 2W	3D	2W
2C	1/ 6W				

Dimension

PARTS LIST

* New Parts
Parts without Parts No. are not supplied.
Les articles non mentionnes dans le Parts No. ne sont pas fournis.
Telle ohne Parts No. werden nicht geliefert.

Ref. No. 参照番号	Address 位置	New Parts 新	Parts No. 部品番号	Description 部品名／規格	Destination 仕向	Remarks 備考
			TM-221A/E/ES			
1	1B	*	A01-1021-03	METALLIC CABINET(TOP)		
2	2B	*	A01-1022-03	METALLIC CABINET(BOTTOM)		
4	1A	*	A20-2598-02	PANEL ASSY	K1M1M2	
4	1A	*	A20-2600-02	PANEL ASSY	T1W1	
4	1A	*	A20-2600-02	PANEL ASSY	T2W2	
-		*	A20-2574-03	PANEL		
		*	B10-0688-03	FRONT GLASS	T1W1	
		*	B10-0688-03	FRONT GLASS	T2W2	
9	2A	*	B11-0442-04	REFRACTOR		
11	2A	*	B38-0303-05	LCD ASSY		
14	1B	*	B42-2455-04	LABEL (M4X8 MAX)		
15	1E		B46-0410-10	WARRANTY CARD	K1	
16	1D	*	B50-8148-00	INSTRUCTION MANUAL	K1M1M2	
16	1D	*	B50-8148-00	INSTRUCTION MANUAL	W1W2	
16	1D	*	B50-8149-00	INSTRUCTION MANUAL	T1T2	
-		*	B10-0686-03	FRONT GLASS	K1M1M2	
-		*	B11-0446-04	REFRACTOR		
		*	E31-3224-05	FLAT CABLE (LCD-CONTROL)		
22	3D		E30-2053-05	DC CORD ASSY (ACSY)		
-		*	E31-3239-15	LEAD WITH CONNECTOR(SP)		
			F05-2036-05	FUSE(20A) FOR DC CORD		
27	3D		F05-1031-05	FUSE(10A)	K1M1M2	
27	3D		F05-1031-05	FUSE(10A)	T2W2	
27	3D		F05-4022-05	FUSE(4A)	T1W1	
30	2B		F20-0520-04	INSULATING SHEET(LITHUM BATT)		
31	2A		F20-0521-04	INSULATING SHEET(LITHUM BATT)		
32	2A		F29-0431-05	INSULATOR (VOL,SQL)		
35	1C		G10-0607-04	FELT (HEAT SINK)		
36	1A		G09-0405-05	SPRING (KNOB)		
37	1B,2B		G10-0604-04	FELT		
38	1B	*	G10-0651-04	FELT (SP)		
40	2A	*	G13-0839-04	CUSHION (KNOB)		
42	1B	*	G13-0845-04	CUSHION (SP)		
43	2A		G53-0508-04	FELT		
-		*	G13-0838-04	CUSHION		
-			G13-0842-04	CUSHION	M1M2T1	
-			G13-0842-04	CUSHION	T2W1W2	
-			G13-0853-04	FELT (SUB PANEL)		
48	3E	*	H01-8079-04	ITEM CARTON BOX	K1	
48	3E	*	H01-8080-04	ITEM CARTON BOX	M1M2	
48	3E	*	H01-8081-04	ITEM CARTON BOX	T1	
48	3E	*	H01-8082-04	ITEM CARTON BOX	T2	
48	3E	*	H01-8083-04	ITEM CARTON BOX	W1	
48	3E	*	H01-8084-04	ITEM CARTON BOX	W2	
49	3D	*	H10-2626-02	POLYSTYRENE FOAMED FIXTURE	T1W1	
49	3D	*	H10-2627-02	POLYSTYRENE FOAMED FIXTURE	K1M1M2	
49	3D	*	H10-2627-02	POLYSTYRENE FOAMED FIXTURE	T2W2	
51	1D	*	H13-0812-04	POLYSTYRENE FORMED PLATE		
52	2D	*	H13-0814-04	BUFFER (MOUNT BRACKET)		
53	3D		H25-0049-03	PROTECTION BAG (DC CORD)		

E: Scandinavia & Europe K: USA P: Canada W: Europe
U: PX(Far East, Hawaii) T: England M: Other Areas
UE: AAFES(Europe) X: Australia

TM-221A : K1,M1,M2
TM-221E : T1,W1
TM-221ES : T2,W2

⚠ indicates safety critical components.

PARTS LIST

⁎ New Parts
Parts without **Parts No.** are not supplied.
Les articles non mentionnes dans le **Parts No.** ne sont pas fournis.
Telle ohne **Parts No.** werden nicht geliefert.

Ref. No. 参照番号	Address 位置	New Parts 新	Parts No. 部品番号	Description 部品名／規格	Destination 仕向	Remarks 備考
54	2D	*	H25-0720-04	PROTECTION BAG		
55	3D		H25-0029-04	PROTECTION BAG (MIC HOOK,SCREW	K1	
57	3D		J20-0319-24	MIC HOOK (ACSY)	K1	
59	2D	*	J29-0416-03	MOUNTING BRACKET(ACSY)		
60	2A		J31-0141-04	SPACER RING (MIC)		
61	1B	*	J19-1422-04	HOLDER		
–			J61-0307-05	WIRE BAND		
64	1A	*	K27-0496-04	KNOB(BUTTON) POWER,LOW		
66	2A	*	K29-3058-04	KNOB(BUTTON) MHZ,VFO/M,M.IN		
67	1A	*	K29-3060-04	KNOB MAIN		
68	1A	*	K29-3061-04	KNOB VOL,SQL		
69	1A	*	K29-3069-04	KNOB(BUTTON) SHIFT		
70	1A	*	K29-3065-04	KNOB(BUTTON) REV		
71	1A	*	K29-3067-04	KNOB(BUTTON) SCAN		
72	1A	*	K29-3066-04	KNOB(BUTTON) ALERT	T1W1	
72	1A	*	K29-3066-04	KNOB(BUTTON) ALERT	T2W2	
72	1A	*	K29-3068-04	KNOB(BUTTON) CTCSS	K1M1M2	
73	1A	*	K29-3070-04	KNOB(BUTTON) TONE		
–		*	K29-3057-04	KNOB RING		
77	3D	*	N99-0318-05	SCREW SET (ACSY)		
78	3D		N46-3010-46	PAN HEAD TAPPING SCREW(MIC)	K1	
A	1B,1C		N32-2606-46	FLAT HEAD MACHINE SCREW		
B	2A		N87-2606-46	BRAZIER HEAD TAPTITE SCREW		
C	2A,2B		N89-2606-46	BINDING HEAD TAPTITE SCREW		
D	1B,2B		N35-2606-45	BINDING HEAD MACHINE SCREW		
			S50-1406-05	TACT SWITCH	T2W1W2	
–			S50-1406-05	TACT SWITCH	M1M2T1	
85	1B	*	T07-0246-05	LOUDSPEAKER(FULLRANGE)		
86	2D		T91-0359-05	MICROPHONE	K1	
86	2D		T91-0365-15	MICROPHONE	T2W1W2	
86	2D	*	T91-0365-15	MICROPHONE	M1M2T1	
–			LC7582	IC(LCD DRIVER)		
94	2A		W09-0326-05	LITHIUM BATTERY		
99	1B,1C	*	X45-1330-03	FINAL UNIT	T1W1	
99	1B,1C	*	X45-1360-02	FINAL UNIT	K1M1M2	
99	1B,1C	*	X45-1360-02	FINAL UNIT	T2W2	
100	2A	*	X53-3040-11	CONTROL UNIT	K1	
100	2A	*	X53-3040-21	CONTROL UNIT	M1	
100	2A	*	X53-3040-22	CONTROL UNIT	M2	
100	2A	*	X53-3040-51	CONTROL UNIT	T1T2	
100	2A	*	X53-3040-61	CONTROL UNIT	W1W2	
101	2B	*	X57-3060-11	TX-RX UNIT	K1M1M2	
101	2B	*	X57-3060-51	TX-RX UNIT	T1W1	
101	2B	*	X57-3060-52	TX-RX UNIT	T2W2	
FINAL UNIT (X45-1330-03) : TM-221E						
C1 ,2			C90-0868-05	ELECTRO 10UF 16WV		
C3			CC45SL2H030C	CERAMIC 3.0PF C		
C4			CC45SL2H150J	CERAMIC 15PF J		
C5			CC45SL2H101J	CERAMIC 100PF J		
C6			CC45SL2H150J	CERAMIC 15PF J		

E: Scandinavia & Europe K: USA P: Canada W:Europe
U: PX(Far East, Hawaii) T: England M: Other Areas
UE : AAFES(Europe) X: Australia

TM-221A : K1,M1,M2
TM-221E : T1,W1
TM-221ES : T2,W2

⚠ indicates safety critical components.

PARTS LIST

⋇ New Parts
Parts without Parts No. are not supplied.
Les articles non mentionnes dans le Parts No. ne sont pas fournis.
Teile ohne Parts No. werden nicht geliefert.

Ref. No. 参照番号	Address 位置	New Parts 新	Parts No. 部品番号	Description 部品名／規格	Destination 仕向	Remarks 備考
C7			CC45SL2H390J	CERAMIC 39PF J		
C8			CC45CH1H020C	CERAMIC 2.0PF C		
C9			CC45SL2H330J	CERAMIC 33PF J		
C10			CC45CH1H010C	CERAMIC 1.0PF C		
C11			CM73F2H220J	CHIP C 22PF J		
C12 -18			CK45B1H102K	CERAMIC 1000PF K		
			E31-2066-05	COAX. CABLE (DO)		
			E31-2090-05	COAX. CABLE (RA)		
110	1C		E30-2021-35	DC CORD		
111	1C		E30-2074-05	ANT. CABLE WITH CONNECTOR		
-			E11-0401-05	EAR PHONE JACK		
TP1			E23-0512-05	TERMINAL (1P)		
			F05-4022-05	FUSE (4A)		
115	1C		F01-0949-05	HEAT SINK		
120	1B		J19-1375-04	COAX. CABLE FITTING HARDWARE		
121	1C		J41-0033-05	BUSHING (DC CORD)		
122	1C		J42-0425-05	BUSHING (ANT CABLE)		
-			J61-0307-05	WIRE BAND		
L1			L34-0908-05	COIL (3,9.5T)		
L2			L34-0895-05	COIL (3,6T)		
L3			L34-0742-05	COIL (3,5T)		
L4			L34-0908-05	COIL (3,9.5T)		
L5 ,6			L34-0499-05	VHF COIL (3,4T)		
L7			L40-1091-03	SMALL FIXED INDUCTOR(1UH)		
E	1B		N09-0626-04	SEMUSE SCREW		
F	1B		N87-2606-41	BRAZIER HEAD TAPTITE SCREW		
R1			RD14DB2H181J	SMALL-RD 180 J 1/2W		
R2			RD14BB2C103J	RD 10K J 1/6W		
VR1			R12-0541-05	TRIMMING POT. (100)		
D1			DSA3A1	DIODE		
D2 ,3			MI308	DIODE		
D4 ,5			1S1587	DIODE		
Q1			M57747	IC(POWER MODULE)		
FINAL UNIT (X45-1360-02) : TM-221A/ES						
C1 ,2			CE04CW1C100M	ELECTRO 10UF 16WV		
C3			CC45SL2H100D	CERAMIC 10PF D		
C4			CC45SL2H180J	CERAMIC 18PF J		
C5			CK45B2H102K	CERAMIC 1000PF K		
C6			CC45SL2H180J	CERAMIC 18PF J		
C7			CC45SL2H390J	CERAMIC 39PF J		
C8			CC45CH1H010C	CERAMIC 1.0PF C		
C9			CC45SL2H330J	CERAMIC 33PF J		
C10			CC45CH1H010C	CERAMIC 1.0PF C		
C11			CM73F2H220J	CHIP C 22PF J		
C12 -17			CK45B1H102K	CERAMIC 1000PF K		
			E11-0401-05	EAR PHONE JACK		
			E23-0512-05	TERMINAL		
			E31-2066-05	COAX CABLE (DO)		
			E31-2090-05	COAX CABLE (RA)		
110	1C		E30-2021-35	DC CORD		

E: Scandinavia & Europe K: USA P: Canada W: Europe
U: PX(Far East, Hawaii) T: England M: Other Areas
UE: AAFES(Europe) X: Australia

TM-221A : K1,M1,M2
TM-221E : T1,W1
TM-221ES : T2,W2

⚠ indicates safety critical components.

PARTS LIST

⋇ New Parts
Parts without Parts No. are not supplied.
Les articles non mentionnes dans le Parts No. ne sont pas fournis.
Teile ohne Parts No. werden nicht geliefert.

Ref. No. 参照番号	Address 位置	New Parts 新	Parts No. 部品番号	Description 部品名／規格	Destination 仕向	Remarks 備考
111	1C		E30-2074-05	ANT. CABLE WITH CONNECTOR		
			F05-1031-05	FUSE (10A)		
115	1C		F01-0950-05	HEAT SINK		
			J31-0503-05	BEAD		
120	1B		J19-1375-04	COAX CABLE FITTING HARDWARE		
121	1C		J41-0033-05	BUSHING (DC CORD)		
122	1C		J42-0448-05	BUSHING (ANT CABLE)		
-			J61-0307-05	WIRE BAND		
L1			L34-0908-05	COIL (3,9.5T)		
L2			L34-0895-05	COIL (3,6T)		
L3			L34-0499-05	VHF COIL (3,4T)		
L4			L34-0908-05	COIL (3,9.5T)		
L5 ,6			L34-0499-05	VHF COIL (3,4T)		
L7			L40-1091-03	SMALL FIXED INDUCTOR(1UH)		
E	1B		N09-0626-04	SEMUS SCREW		
F	1B		N87-2606-41	BRAZIER HEAD TAPTITE SCREW		
R1			RD14DB2H151J	SMALL-RD 150 J 1/2W		
R2			RD14BB2C153J	RD 15K J 1/6W		
VR1			R12-0541-05	TRIMMING POT. (100)		
D1			DSA3A1	DIODE		
D2			UM9401	DIODE		
D3			MI308	DIODE		
D4 ,5			1S1587	DIODE		
Q1			M57726	IC(POWER MODULE)		
CONTROL UNIT (X53-3040-XX) -11 : K -21 : M1 -22 : M2 -51 : T1,T2 -61 : W1,W2						
C1 ,2			CK73FB1H103K	CHIP C 0.010UF K		
C3 ,4			CC73FCH1H330J	CHIP C 33PF J		
C5 -14			CK73FB1H102K	CHIP C 1000PF K		
C15			CE04CW1C100M	ELECTRO 10UF 16WV		
C16			CK73FB1H103K	CHIP C 0.010UF K		
C17			CK73EF1C105Z	CHIP C 1.0UF Z		
			E06-0858-05	MIC JACK		
			E40-1878-05	PIN CONNECTOR		
L1			L77-1313-05	CRYSTAL RESONATOR(4.194304MHZ)		
R1			RD41FB2B563J	CYLND CHIP R 56K J 1/8W		
R2 -5			RD41FB2B105J	CYLND CHIP R 1.0M J 1/8W		
R6			RD41FB2B104J	CYLND CHIP R 100K J 1/8W		
R7			RD41FB2B105J	CYLND CHIP R 1.0M J 1/8W		
R8 ,9			RD41FB2B104J	CYLND CHIP R 100K J 1/8W		
R10 -13			RD41FB2B473J	CYLND CHIP R 47K J 1/8W		
R14			RD41FB2B2R2J	CYLND CHIP R 2.2 J 1/8W		
R15			RD41FB2B103J	CYLND CHIP R 10K J 1/8W		
R16			RD41FB2B473J	CYLND CHIP R 47K J 1/8W		
R17 ,18			RD41FB2B474J	CYLND CHIP R 470K J 1/8W		
R19			RD41FB2B472J	CYLND CHIP R 4.7K J 1/8W		
R21			R92-0687-05	CHIP R 0 OHM		
R22			R92-0687-05	CHIP R 0 OHM	K1M1M2	
R23			R92-0687-05	CHIP R 0 OHM	M2W1W2	
R24			R92-0687-05	CHIP R 0 OHM	M1T1T2	
R25			R92-0687-05	CHIP R 0 OHM	K1M1	

E: Scandinavia & Europe K: USA P: Canada W: Europe
U: PX(Far East, Hawaii) T: England M: Other Areas
UE: AAFES(Europe) X: Australia

TM-221A : K1,M1,M2
TM-221E : T1,W1
TM-221ES : T2,W2

⚠ indicates safety critical components.

PARTS LIST

* New Parts
Parts without **Parts No.** are not supplied.
Les articles non mentionnes dans le **Parts No.** ne sont pas fournis.
Telle ohne **Parts No.** werden nicht gellefert.

Ref. No. 参照番号	Address 位置	New Parts 新	Parts No. 部品番号	Description 部品名／規格	Destination 仕向	Remarks 備考
R26			RD41FB2B102J	CYLND CHIP R 1.0K J 1/8W		
VR1			R05-3441-05	POTENTIOMETER(10KA)VOL		
VR2			R05-4420-05	POTENTIOMETER(50KB)SQL		
S1 -8			S40-1086-05	TACT SWITCH		
S9 ,10			S40-2458-05	PUSH SWITCH		
D1 -4			1SS184	CHIP DIODE		
IC1		*	LA5006M	IC(LOW SATURATION REGULATOR)		
IC2		*	M51951BML	IC(SYSTEM RESET)		
IC3		*	75106G-508-1B	IC(MICROPROCESSOR)		
IC4		*	KRR-C001	IC(TONE A-D CONV)		
Q1			DTC124EK	DIGITAL TRANSISTOR		
Q2			2SC2712(Y)	CHIP TRANSISTOR		
		*	W02-0388-05	ROTARY ENCODER		
TX-RX UNIT (X57-3060-XX) -11 : K,M1,M2 -51 : T1,W1 -52 : T2,W2						
166	1B		A13-0675-01	FRAME		
C1			CC73FCH1H330J	CHIP C 33PF J		
C2			CC41FRH1H120J	CYLND CHIP C 12PF J		
C3			CC41FCH1H080D	CYLND CHIP C 8.0PF D		
C4			CC41FRH1H150J	CYLND CHIP C 15PF J		
C5			CC73FCH1H240J	CHIP C 24PF J		
C6			CK73FB1H102K	CHIP C 1000PF K		
C7			CK73FB1H103K	CHIP C 0.010UF K		
C8 ,9			CK73FB1H102K	CHIP C 1000PF K		
C10			CK73FB1H103K	CHIP C 0.010UF K		
C11		*	CC41FCH1H020C	CYLND CHIP C 2.0PF C		
C12			CC41FCH1H150J	CYLND CHIP C 15PF J		
C13			CK73FB1H102K	CHIP C 1000PF K		
C14			CK73FB1H103K	CHIP C 0.010UF K		
C15		*	CC41FCH1H050C	CYLND CHIP C 5.0PF C		
C16			CC73FCH1H101J	CHIP C 100PF J		
C17 -19			CK73FB1H103K	CHIP C 0.010UF K		
C20			CK73FB1H102K	CHIP C 1000PF K		
C21			CE04EW1A470M	ELECTRO 47UF 10WV		
C22			CC73FSL1H151J	CHIP C 150PF J	T1W1	
C22			CC73FSL1H151J	CHIP C 150PF J	W1W2	
C22			CC73FSL1H331J	CHIP C 330PF J	K1M1M2	
C23			CK73FB1H103K	CHIP C 0.010UF K		
C24			CC41FCH1H100D	CYLND CHIP C 10PF D	K1M1M2	
C25			CC73FCH1H330J	CHIP C 33PF J	T1W1	
C25			CC73FCH1H330J	CHIP C 33PF J	T2W2	
C25			CC73FSL1H181J	CHIP C 180PF J	K1M1M2	
C26			CE04EW1C100M	ELECTRO 10UF 16WV		
C27			CK73FB1H102K	CHIP C 1000PF K		
C28			CK73EF1C105Z	CHIP C 1.0UF Z		
C29			CK73FB1H103K	CHIP C 0.010UF K		
C30 ,31			CE04EW1A470M	ELECTRO 47UF 10WV		
C32 ,33			CK73EB1H104K	CHIP C 0.10UF K		
C34			CK73FB1H103K	CHIP C 0.010UF K		
C35 ,36			CK73FB1H102K	CHIP C 1000PF K		
C37			CE04EW1A470M	ELECTRO 47UF 10WV		
C38			CK73EB1H333K	CHIP C 0.033UF K		
C39			CE04EW1A470M	ELECTRO 47UF 10WV		

E: Scandinavia & Europe K: USA P: Canada W:Europe
U: PX(Far East, Hawaii) T: England M: Other Areas
UE : AAFES(Europe) X: Australia

TM-221A : K1,M1,M2
TM-221E : T1,W1
TM-221ES : T2,W2

⚠ indicates safety critical components.

PARTS LIST

* New Parts
Parts without **Parts No.** are not supplied.
Les articles non mentionnes dans le **Parts No.** ne sont pas fournis.
Teile ohne **Parts No.** werden nicht geliefert.

Ref. No. 参照番号	Address 位置	New Parts 新	Parts No. 部品番号	Description 部品名／規格			Destination 仕向	Remarks 備考
C40			CK73EF1C105Z	CHIP C	1.0UF	Z		
C41			CK73FB1H103K	CHIP C	0.010UF	K	K1M1M2	
C42			CE04EW1A470M	ELECTRO	47UF	10WV		
C43			CK73FB1H103K	CHIP C	0.010UF	K		
C44			CE04EW1C100M	ELECTRO	10UF	16WV		
C45		*	C92-0004-05	CHIP TAN	1UF	16WV		
C46			CE04EW1A470M	ELECTRO	47UF	10WV		
C47			CK73FB1H102K	CHIP C	1000PF	K		
C48		*	CC41FCH1H030C	CYLND CHIP C	3.0PF	C	K1M1M2	
C49 ,50			CK73FB1H103K	CHIP C	0.010UF	K	K1M1M2	
C51			CC73FCH1H330J	CHIP C	33PF	J	K1M1M2	
C52			CK73FB1H103K	CHIP C	0.010UF	K	K1M1M2	
C53			CK73FB1H103K	CHIP C	0.010UF	K	T1W1	
C53			CK73FB1H103K	CHIP C	0.010UF	K	T2W2	
C54			CC41FCH1H150J	CYLND CHIP C	0.010UF	J	T1W1	
C54			CC41FCH1H150J	CYLND CHIP C	0.010UF	J	T2W2	
C55			CC73FSL1H221J	CHIP C	220PF	J	T1W1	
C55			CC73FSL1H221J	CHIP C	220PF	J	T2W2	
C56 ,57			CC73FCH1H101J	CHIP C	100PF	J	T1W1	
C56 ,57			CC73FCH1H101J	CHIP C	100PF	J	T2W2	
C58			CC73FCH1H101J	CHIP C	100PF	J	K1M1M2	
C59			CK73EB1H473K	CHIP C	0.047UF	K		
C60			CC73FCH1H101J	CHIP C	100PF	J		
C61			CK41FB1H471K	CYLND CHIP C	470PF	K		
C62			CK73FB1H182K	CHIP C	1800PF	K		
C63			CK73FB1H103K	CHIP C	0.010UF	K		
C64		*	C92-0004-05	CHIP TAN	1UF	16WV		
C65			CK73FB1H102K	CHIP C	1000PF	K		
C66		*	C92-0003-05	CHIP TAN	0.47UF	25WV		
C67			CK73FB1H103K	CHIP C	0.010UF	K		
C68			CK73EB1H683K	CHIP C	0.068UF	K		
C69		*	C92-0004-05	CHIP TAN	1UF	16WV		
C70 ,71			CE04EW1A101M	ELECTRO	100UF	10WV		
C72			CC73FCH1H330J	CHIP C	33PF	J		
C73			CK73FB1H102K	CHIP C	1000PF	K		
C74			CC73FCH1H330J	CHIP C	33PF	J		
C75			CK73FB1H103K	CHIP C	0.010UF	K		
C76			CC41FCH1H100D	CYLND CHIP C	10PF	D		
C77			CK73FB1H102K	CHIP C	1000PF	K		
C78			CC41FCH1H100D	CYLND CHIP C	10PF	D		
C79			CK73FB1H103K	CHIP C	0.010UF	K		
C80			CK41FB1H471K	CYLND CHIP C	470PF	K		
C81			CK73FB1H102K	CHIP C	1000PF	K		
C82			CK73FB1H103K	CHIP C	0.010UF	K		
C83			CK73EF1C105Z	CHIP C	1.0UF	Z		
C84 ,85			CK73FB1H103K	CHIP C	0.010UF	K		
C86			CK73EF1C105Z	CHIP C	1.0UF	Z		
C87			CK73EB1H333K	CHIP C	0.033UF	K		
C88 -90			CE04EW1A470M	ELECTRO	47UF	10WV		
C91			CE04EW1A471M	ELECTRO	470UF	10WV		
C92			CK73EB1H104K	CHIP C	0.10UF	K		
C93			C90-2033-05	ELECTRO	1000UF	16WV		
C94			CC73FCH1H101J	CHIP C	100PF	J		
C95			CK73FB1H102K	CHIP C	1000PF	K		
C96			CE04EW1E4R7M	ELECTRO	4.7UF	25WV		

E: Scandinavia & Europe K: USA P: Canada W:Europe
U: PX(Far East, Hawaii) T: England M: Other Areas
UE : AAFES(Europe) X: Australia

TM-221A : K1,M1,M2
TM-221E : T1,W1
TM-221ES : T2,W2

⚠ indicates safety critical components.

PARTS LIST

* New Parts
Parts without Parts No. are not supplied.
Les articles non mentionnes dans le Parts No. ne sont pas fournis.
Teile ohne Parts No. werden nicht geliefert.

Ref. No. 参照番号	Address 位置	New Parts 新	Parts No. 部品番号	Description 部品名／規格	Destination 仕向	Remarks 備考
C97			CE04EW1C100M	ELECTRO 10UF 16WV		
C98			CK73FB1H102K	CHIP C 1000PF K		
C100			CK73FB1H102K	CHIP C 1000PF K		
C101			CE04EW1C100M	ELECTRO 10UF 16WV		
C102			CK73FB1H102K	CHIP C 1000PF K		
C103			CE04EW1C101M	ELECTRO 100UF 16WV		
C104			CK73FB1H103K	CHIP C 0.010UF K		
C105-109			CK73FB1H102K	CHIP C 1000PF K		
C110,111			CK73FB1H562K	CHIP C 5600PF K		
C112			CK73EB1H104K	CHIP C 0.10UF K		
C113			CK73FB1H103K	CHIP C 0.010UF K		
C114		*	CC41FCH1H030C	CYLND CHIP C 3.0PF C	K1M1M2	
C115			CC41FCH1H150J	CYLND CHIP C 15PF J	K1M1M2	
C116		*	CC41FCH1H010C	CYLND CHIP C 1.0PF C	K1M1M2	
C117			CC41FCH1H150J	CYLND CHIP C 15PF J	K1M1M2	
C118			CC41FCH1H220J	CYLND CHIP C 22PF J	K1M1M2	
C119			CK73FB1H103K	CHIP C 0.010UF K		
TC1		*	C05-0348-05	TRIMMING CAP (6PF)	K1M1M2	
TC2			C05-0308-05	TRIMMING CAP (4PF)	T1W1	
TC2			C05-0308-05	TRIMMING CAP (4PF)	T2W2	
TC3 ,4		*	C05-0350-05	TRIMMING CAP (20PF)		
			E04-0154-05	RF COAXIAL CONNECTOR		
-			E31-3237-05	LEAD WITH CONNECTOR	K1M1M2	
J1			E40-5016-05	PIN CONNECTOR (2P)	K1M1M2	
J2			E40-3237-05	PIN CONNECTOR (2P)		
J3			E40-3238-05	PIN CONNECTOR (3P)		
J4			E40-3237-05	PIN CONNECTOR (2P)		
J5			E40-3238-05	PIN CONNECTOR (3P)		
J6			E40-3237-05	PIN CONNECTOR (2P)		
J7 ,8			E40-5099-05	PIN CONNECTOR (SSQ-9)		
TP1			E40-0211-05	PIN CONNECTOR (2P)		
TP2 ,3			E23-0465-05	TERMINAL		
-		*	F11-1064-05	SHIELDING CASE	K1M1M2	
L1 ,2		*	L34-4039-15	COIL		
L3			L79-0498-15	HELICAL	T1W1	
L3			L79-0498-15	HELICAL	T2W2	
L4			L34-0683-05	TUNING COIL		
L5			L30-0005-05	TUNING COIL		
L6			L71-0216-05	MCF (10.695MHZ)	K1M1M2	
L6			L71-0228-05	MCF (10.70MHZ)	T1W1	
L6			L71-0228-05	MCF (10.70MHZ)	T2W2	
L7			L30-0005-05	TUNING COIL		
L8			L77-0720-05	CRYSTAL RESONATOR(10.24MHZ)	K1M1M2	
L8			L77-0946-05	CRYSTAL RESONATOR(10.245MHZ)	T1W1	
L8			L77-0946-05	CRYSTAL RESONATOR(10.245MHZ)	T2W2	
L9			L30-0531-05	TUNING COIL		
L10			L72-0315-05	CERAMIC FILTER (CFW455F)		
L11			L30-0503-05	TUNING COIL		
L12			L40-3392-81	CHIP INDUCTOR (3.3UH)		
L13			L77-1311-05	CRYSTAL RESONATOR(12.8MHZ)	T1W1	
L13			L77-1311-05	CRYSTAL RESONATOR(12.8MHZ)	T2W2	
L14			L40-3392-81	CHIP INDUCTOR (3.3UH)		
L15			L40-3982-81	CHIP INDUCTOR (0.39UH)		

E: Scandinavia & Europe K: USA P: Canada W: Europe
U: PX(Far East, Hawaii) T: England M: Other Areas
UE: AAFES(Europe) X: Australia

TM-221A : K1,M1,M2
TM-221E : T1,W1
TM-221ES : T2,W2

⚠ indicates safety critical components.

PARTS LIST

* New Parts
Parts without **Parts No.** are not supplied.
Les articles non mentionnes dans le **Parts No.** ne sont pas fournis.
Teile ohne **Parts No.** werden nicht geliefert.

Ref. No. 参照番号	Address 位置	New Parts 新	Parts No. 部品番号	Description 部品名／規格	Destination 仕向	Remarks 備考
L16			L15-0308-05	LOW-FREQUENCY CHOKE COIL		
L17			L34-0893-05	COIL (3,4T)		
L18			L34-0894-05	COIL (3,5T)		
L19		*	L34-2302-05	COIL	K1M1M2	
L20		*	L34-2303-05	COIL	K1M1M2	
L21		*	L34-2302-05	COIL	K1M1M2	
B	1B,2B		N87-2606-46	BRAZIER HEAD TAPTITE SCREW		
R1			RD41FB2B562J	CYLND CHIP R 5.6K J 1/8W		
R2			RD41FB2B104J	CYLND CHIP R 100K J 1/8W		
R3			RD41FB2B223J	CYLND CHIP R 22K J 1/8W		
R4			RD41FB2B101J	CYLND CHIP R 100 J 1/8W		
R5			RD41FB2B470J	CYLND CHIP R 47 J 1/8W		
R6			RD41FB2B331J	CYLND CHIP R 330 J 1/8W		
R7			RD41FB2B470J	CYLND CHIP R 47 J 1/8W		
R8			RD41FB2B182J	CYLND CHIP R 1.8K J 1/8W	K1M1M2	
R8			RD41FB2B222J	CYLND CHIP R 2.2K J 1/8W	T1W1	
R8			RD41FB2B222J	CYLND CHIP R 2.2K J 1/8W	T2W2	
R9			RD41FB2B473J	CYLND CHIP R 47K J 1/8W		
R10			RD41FB2B470J	CYLND CHIP R 47 J 1/8W		
R11			RD41FB2B473J	CYLND CHIP R 47K J 1/8W		
R12			RD41FB2B102J	CYLND CHIP R 1.0K J 1/8W		
R13			RD41FB2B100J	CYLND CHIP R 10 J 1/8W		
R14			RD41FB2B274J	CYLND CHIP R 270K J 1/8W		
R15			RD41FB2B101J	CYLND CHIP R 100 J 1/8W		
R16			RD41FB2B182J	CYLND CHIP R 1.8K J 1/8W		
R17			RD41FB2B473J	CYLND CHIP R 47K J 1/8W		
R18			RD41FB2B103J	CYLND CHIP R 10K J 1/8W		
R19			RD41FB2B101J	CYLND CHIP R 100 J 1/8W		
R20			RD41FB2B471J	CYLND CHIP R 470 J 1/8W		
R21			RD41FB2B101J	CYLND CHIP R 100 J 1/8W		
R22			RD41FB2B473J	CYLND CHIP R 47K J 1/8W		
R23			RD41FB2B182J	CYLND CHIP R 1.8K J 1/8W		
R24			R92-0687-05	CHIP R 0 OHM	T1W1	
R24			R92-0687-05	CHIP R 0 OHM	T2W2	
R25			RD41FB2B333J	CYLND CHIP R 33K J 1/8W		
R26			RD41FB2B102J	CYLND CHIP R 1.0K J 1/8W		
R27			RD41FB2B472J	CYLND CHIP R 4.7K J 1/8W		
R28			RD41FB2B223J	CYLND CHIP R 22K J 1/8W		
R29			RD41FB2B103J	CYLND CHIP R 10K J 1/8W		
R30			RD41FB2B273J	CYLND CHIP R 27K J 1/8W		
R31			RD41FB2B102J	CYLND CHIP R 1.0K J 1/8W		
R32			RD41FB2B103J	CYLND CHIP R 10K J 1/8W	T2W2	
R33			RD41FB2B104J	CYLND CHIP R 100K J 1/8W	K1M1M2	
R33			RD41FB2B223J	CYLND CHIP R 22K J 1/8W	T1W1	
R33			RD41FB2B223J	CYLND CHIP R 22K J 1/8W	T2W2	
R34			RD41FB2B222J	CYLND CHIP R 2.2K J 1/8W		
R35			R92-0687-05	CHIP R 0 OHM	T1W1	
R35			R92-0687-05	CHIP R 0 OHM	T2W2	
R36			RD41FB2B182J	CYLND CHIP R 1.8K J 1/8W		
R37			RD41FB2B103J	CYLND CHIP R 10K J 1/8W		
R38			RD41FB2B182J	CYLND CHIP R 1.8K J 1/8W		
R39			RD41FB2B102J	CYLND CHIP R 1.0K J 1/8W		
R40			RD41FB2B103J	CYLND CHIP R 10K J 1/8W		

E: Scandinavia & Europe K: USA P: Canada W: Europe
U: PX(Far East, Hawaii) T: England M: Other Areas
UE: AAFES(Europe) X: Australia

TM-221A : K1,M1,M2
TM-221E : T1,W1
TM-221ES : T2,W2

⚠ indicates safety critical components.

PARTS LIST

* New Parts
Parts without Parts No. are not supplied.
Les articles non mentionnes dans le Parts No. ne sont pas fournis.
Telle ohne Parts No. werden nicht geliefert.

Ref. No. 参照番号	Address 位置	New Parts 新	Parts No. 部品番号	Description 部品名／規格	Destination 仕向	Remarks 備考
R41			RD41FB2B182J	CYLND CHIP R 1.8K J 1/8W		
R42			RD41FB2B102J	CYLND CHIP R 1.0K J 1/8W		
R43			RD41FB2B100J	CYLND CHIP R 10 J 1/8W		
R44			RD41FB2B472J	CYLND CHIP R 4.7K J 1/8W		
R45 -49			RD41FB2B473J	CYLND CHIP R 47K J 1/8W		
R50			RD41FB2B101J	CYLND CHIP R 100 J 1/8W	K1M1M2	
R51			RD41FB2B274J	CYLND CHIP R 270K J 1/8W	K1M1M2	
R52			RD41FB2B222J	CYLND CHIP R 2.2K J 1/8W	K1M1M2	
R53			RD41FB2B472J	CYLND CHIP R 4.7K J 1/8W	K1M1M2	
R54			RD41FB2B223J	CYLND CHIP R 22K J 1/8W		
R55			RD41FB2B101J	CYLND CHIP R 100 J 1/8W	K1M1M2	
R56			RD41FB2B331J	CYLND CHIP R 330 J 1/8W	K1M1M2	
R57			RD41FB2B470J	CYLND CHIP R 47 J 1/8W	K1M1M2	
R58			RD41FB2B101J	CYLND CHIP R 100 J 1/8W	T1W1	
R58			RD41FB2B101J	CYLND CHIP R 100 J 1/8W	T2W2	
R59			RD41FB2B273J	CYLND CHIP R 27K J 1/8W	T1W1	
R59			RD41FB2B273J	CYLND CHIP R 27K J 1/8W	T2W2	
R60			RD41FB2B103J	CYLND CHIP R 10K J 1/8W	T1W1	
R60			RD41FB2B183J	CYLND CHIP R 18K J 1/8W	T2W2	
R61			RD41FB2B222J	CYLND CHIP R 2.2K J 1/8W	T1W1	
R61			RD41FB2B222J	CYLND CHIP R 2.2K J 1/8W	T2W2	
R62			RD41FB2B103J	CYLND CHIP R 10K J 1/8W		
R63			RD41FB2B473J	CYLND CHIP R 47K J 1/8W		
R64 ,65			RD41FB2B272J	CYLND CHIP R 2.7K J 1/8W		
R66			RD41FB2B822J	CYLND CHIP R 8.2K J 1/8W		
R67			RD41FB2B183J	CYLND CHIP R 18K J 1/8W		
R68 ,69			RD41FB2B103J	CYLND CHIP R 10K J 1/8W		
R70			RD41FB2B472J	CYLND CHIP R 4.7K J 1/8W		
R71			RD41FB2B223J	CYLND CHIP R 22K J 1/8W		
R72			RD41FB2B103J	CYLND CHIP R 10K J 1/8W		
R73			RD41FB2B223J	CYLND CHIP R 22K J 1/8W		
R74			RD41FB2B101J	CYLND CHIP R 100 J 1/8W		
R75			RD41FB2B102J	CYLND CHIP R 1.0K J 1/8W		
R76			RD41FB2B101J	CYLND CHIP R 100 J 1/8W		
R77			RD41FB2B102J	CYLND CHIP R 1.0K J 1/8W		
R78			RD41FB2B223J	CYLND CHIP R 22K J 1/8W		
R79			RD41FB2B103J	CYLND CHIP R 10K J 1/8W		
R80			RD41FB2B101J	CYLND CHIP R 100 J 1/8W		
R81 ,82			RD41FB2B103J	CYLND CHIP R 10K J 1/8W		
R83			RD41FB2B681J	CYLND CHIP R 680 J 1/8W		
R84			RD41FB2B101J	CYLND CHIP R 100 J 1/8W		
R85			RD41FB2B473J	CYLND CHIP R 47K J 1/8W		
R86			RD41FB2B2R2J	CYLND CHIP R 2.2 J 1/8W		
R87			RD41FB2B473J	CYLND CHIP R 47K J 1/8W		
R88			RD41FB2B273J	CYLND CHIP R 27K J 1/8W		
R89			RD41FB2B101J	CYLND CHIP R 100 J 1/8W		
R90			RD41FB2B182J	CYLND CHIP R 1.8K J 1/8W		
R91			RD41FB2B151J	CYLND CHIP R 150 J 1/8W		
R92 ,93			R92-0687-05	CHIP R 0 OHM		
R94			R92-0687-05	CHIP R 0 OHM	T1W1	
R94			R92-0687-05	CHIP R 0 OHM	T2W2	
R95		*	R92-0685-05	RD 22 J 1/2W	K1M1M2	
R95		*	R92-0685-05	RD 22 J 1/2W	T2W2	
R95		*	R92-0686-05	RD 33 J 1/2W	T1W1	
R96			RD41FB2B104J	CYLND CHIP R 100K J 1/8W	K1M1M2	

E: Scandinavia & Europe K: USA P: Canada W:Europe
U: PX(Far East, Hawaii) T: England M: Other Areas
UE: AAFES(Europe) X: Australia

TM-221A : K1,M1,M2
TM-221E : T1,W1
TM-221ES : T2,W2

⚠ indicates safety critical components.

PARTS LIST

⁎ New Parts
Parts without Parts No. are not supplied.
Les articles non mentionnes dans le Parts No. ne sont pas fournis.
Teile ohne Parts No. werden nicht geliefert.

Ref. No. 参照番号	Address 位置	New Parts 新	Parts No. 部品番号	Description 部品名／規格	Destination 仕向	Remarks 備考
R96			RD41FB2B104J	CYLND CHIP R 100K J 1/8W	T2W2	
R96			RD41FB2B473J	CYLND CHIP R 47K J 1/8W	T1W1	
R97			RD41FB2B103J	CYLND CHIP R 10K J 1/8W	T2W2	
R97			RD41FB2B103J	CYLND CHIP R 10K J 1/8W	K1M1M2	
R97			RD41FB2B472J	CYLND CHIP R 4.7K J 1/8W	T1W1	
R98			RD41FB2B104J	CYLND CHIP R 100K J 1/8W		
R99			RD41FB2B101J	CYLND CHIP R 100 J 1/8W	T1W1	
R100			RD41FB2B472J	CYLND CHIP R 4.7K J 1/8W		
R101			RD41FB2B564J	CYLND CHIP R 560K J 1/8W		
R102			RD41FB2B472J	CYLND CHIP R 4.7K J 1/8W		
R103			RD41FB2B183J	CYLND CHIP R 18K J 1/8W	K1M1M2	
R104			RD41FB2B103J	CYLND CHIP R 10K J 1/8W	K1M1M2	
R105			RD41FB2B223J	CYLND CHIP R 22K J 1/8W		
R106			RD41FB2B473J	CYLND CHIP R 47K J 1/8W		
R107			RD41FB2B564J	CYLND CHIP R 560K J 1/8W		
R108			RD41FB2B222J	CYLND CHIP R 2.2K J 1/8W		
R109			RD41FB2B102J	CYLND CHIP R 1.0K J 1/8W		
R110-112			RD41FB2B104J	CYLND CHIP R 100K J 1/8W	K1M1M2	
R113			RD41FB2B473J	CYLND CHIP R 47K J 1/8W		
R114-116			RD41FB2B102J	CYLND CHIP R 1.0K J 1/8W		
R117			R92-0687-05	CHIP R 0 ΩHM	T1W1	
R117			R92-0687-05	CHIP R 0 ΩHM	T2W2	
R118,119			R92-0687-05	CHIP R 0 ΩHM		
R120			RD41FB2B103J	CYLND CHIP R 10K J 1/8W	K1M1M2	
R121-123			R92-0687-05	CHIP R 0 ΩHM		
R124			R92-0670-05	CHIP R 0 ΩHM		
R125,126			RD14BB2C223J	RD 22K J 1/6W		
VR1			R12-5047-05	TRIMMING PΩT. (220K)		
VR2			R12-3096-05	TRIMMING PΩT. (10K)	K1M1M2	
VR3			R12-3096-05	TRIMMING PΩT. (10K)		
VR4 ,5			R12-3099-05	TRIMMING PΩT. (47K)		
VR6			R12-3096-05	TRIMMING PΩT. (10K)		
VR7			R12-3098-05	TRIMMING PΩT. (33K)	K1M1M2	
VR7			R12-3098-05	TRIMMING PΩT. (33K)	T2W2	
D1			1SS226	CHIP DIΩDE		
D2			1SS181	CHIP DIΩDE		
D3 ,4			1SS184	CHIP DIΩDE		
D5			02CZ6.2(Y,Z)	CHIP ZENER DIΩDE		
D6			1SS181	CHIP DIΩDE		
D7 ,8			BA282	DIΩDE		
D9 ,10			1SS181	CHIP DIΩDE		
D11 -13			1SV164	CHIP VARI-CAP DIΩDE	K1M1M2	
D14 ,15			1S1555	DIΩDE		
IC1		⁎	MC7808C	IC(VΩLTAGE REGULATΩR/ +14V)		
IC2			M54959P	IC(FREQ SYNTHESIZER PLL)		
IC3			TC4094BP	IC(8-STAGE SHIFT/STΩRE BUS REG		
IC4			UPC1241H	IC		
Q1			3SK184(S)	CHIP FET		
Q2		⁎	3SK131(V12)	CHIP FET		
Q3			2SC2714(Y)	CHIP TRANSISTΩR		
Q4			2SC3326(A)	CHIP TRANSISTΩR		
Q5 ,6			2SB1119S	CHIP TRANSISTΩR		
Q7 ,8			DTC124EK	DIGITAL TRANSISTΩR		
Q9			2SC2712(Y)	CHIP TRANSISTΩR		

E: Scandinavia & Europe K: USA P: Canada W: Europe
U: PX(Far East, Hawaii) T: England M: Other Areas
UE: AAFES(Europe) X: Australia

TM-221A : K1,M1,M2
TM-221E : T1,W1
TM-221ES : T2,W2

⚠ indicates safety critical components.

PARTS LIST

* New Parts
Parts without **Parts No.** are not supplied.
Les articles non mentionnes dans le **Parts No.** ne sont pas fournis.
Teile ohne **Parts No.** werden nicht geliefert.

Ref. No. 参照番号	Address 位置	New Parts 新	Parts No. 部品番号	Description 部品名／規格	Destination 仕向	Remarks 備考
Q10			2SC2714(Y)	CHIP TRANSISTOR	K1M1M2	
Q11			2SC2714(Y)	CHIP TRANSISTOR	T1W1	
Q11			2SC2714(Y)	CHIP TRANSISTOR	T2W2	
Q12			2SC2714(Y)	CHIP TRANSISTOR	K1M1M2	
Q13 ,14			2SC2712(Y)	CHIP TRANSISTOR		
Q15			2SA1162(Y)	CHIP TRANSISTOR		
Q16 ,17			2SC2714(Y)	CHIP TRANSISTOR		
Q18			2SC2712(Y)	CHIP TRANSISTOR		
Q19			2SC2538-22-A	TRANSISTOR	T1W1	
Q19		*	2SC3369	TRANSISTOR	K1M1M2	
Q19		*	2SC3369	TRANSISTOR	T2W2	
Q20			2SD1406(Y)	TRANSISTOR		
Q21			2SC2712(Y)	CHIP TRANSISTOR		
TH1			112-502-2	THERMISTER (5K)		
		*	X58-3090-00	SUB UNIT (VCO)		
		*	X59-3120-00	MODULE UNIT (DRIVE)		
		*	X59-3130-00	MODULE UNIT (APC)		
		*	X59-3140-00	MODULE UNIT (IF)		
		*	X59-3150-00	MODULE UNIT (SQL)		
		*	X59-3160-00	MODULE UNIT (MIC)		
		*	X59-3170-00	MODULE UNIT (VOL)		
VCO (X58-3090-00)						
C1 ,2			CK73FB1H102K	CHIP C 1000PF K		
C3			CC41FCH1H030C	CYLND CHIP C 3.0PF C		
C4			CK73FB1H103K	CHIP C 0.010UF K		
C5			CC41FCH1H030C	CYLND CHIP C 3.0PF C		
C6			CC41FCH1H100D	CYLND CHIP C 10PF D		
C7			CC41FCH1H080D	CYLND CHIP C 8.0PF D		
C8			CC41FCH1H220J	CYLND CHIP C 22PF J		
C9			CC41FCH1H0R5C	CYLND CHIP C 0.5PF C		
C10			CC73FCH1H270J	CHIP C 27PF J		
C11			CK73FB1H102K	CHIP C 1000PF K		
C12			CC41FCH1H030C	CYLND CHIP C 3.0PF C		
C13			CK73FB1H103K	CHIP C 0.010UF K		
C14			CC41FCH1H030C	CYLND CHIP C 3.0PF C		
C15			CC41FCH1H120J	CYLND CHIP C 12PF J		
C16			CC73FCH1H330J	CHIP C 33PF J		
C17			CC41FCH1H150J	CYLND CHIP C 15PF J		
C18			CC41FCH1H110J	CYLND CHIP C 11PF J		
C19			CK73FB1H102K	CHIP C 1000PF K		
C20			CC73FCH1H470J	CHIP C 47PF J		
C21			CK73FB1H102K	CHIP C 1000PF K		
TC1 ,2			C05-0345-05	CHIP TRIMMING CAP(10PF)		
			E40-5095-05	PIN ASSY (10P)		
L1			L40-3392-81	CHIP INDUCTOR (3.3UH)		
L2		*	L34-1192-05	COIL (3,5T)		
L3 ,4			L40-3392-81	CHIP INDUCTOR (3.3UH)		
L5		*	L34-1193-05	COIL (3,4T)		
L6			L40-1092-81	CHIP INDUCTOR (1UH)		
R1			RD41FB2B101J	CYLND CHIP R 100 J 1/8W		
R2			RD41FB2B223J	CYLND CHIP R 22K J 1/8W		
R3			RD41FB2B103J	CYLND CHIP R 10K J 1/8W		
R4			RD41FB2B101J	CYLND CHIP R 100 J 1/8W		

E: Scandinavia & Europe K: USA P: Canada W: Europe
U: PX(Far East, Hawaii) T: England M: Other Areas
UE: AAFES(Europe) X: Australia

TM-221A : K1,M1,M2
TM-221E : T1,W1
TM-221ES : T2,W2

⚠ indicates safety critical components.

PARTS LIST

* New Parts
Parts without Parts No. are not supplied.
Les articles non mentionnes dans le Parts No. ne sont pas fournis.
Telle ohne Parts No. werden nicht gellefert.

Ref. No. 参照番号	Address 位置	New Parts 新	Parts No. 部品番号	Description 部品名／規格	Destination 仕向	Remarks 備考
R5			RD41FB2B470J	CYLND CHIP R 47 J 1/8W		
R6			RD41FB2B391J	CYLND CHIP R 390 J 1/8W		
R7			RD41FB2B104J	CYLND CHIP R 100K J 1/8W		
R8			RD41FB2B103J	CYLND CHIP R 10K J 1/8W		
R9			RD41FB2B152J	CYLND CHIP R 1.5K J 1/8W		
R10			RD41FB2B823J	CYLND CHIP R 82K J 1/8W		
R11			RD41FB2B224J	CYLND CHIP R 220K J 1/8W		
R12			RD41FB2B470J	CYLND CHIP R 47 J 1/8W		
R13			RD41FB2B181J	CYLND CHIP R 180 J 1/8W		
R14			RD41FB2B682J	CYLND CHIP R 6.8K J 1/8W		
R15 ,16			RD41FB2B103J	CYLND CHIP R 10K J 1/8W		
R17			RD41FB2B102J	CYLND CHIP R 1.0K J 1/8W		
D1			1SS184	CHIP DIODE		
D2		*	1SV164	CHIP VARI-CAP DIODE		
D3 ,4		*	1SV166	CHIP VARI-CAP DIODE		
D5		*	1SS153	CHIP DIODE		
Q1			2SC2757(T33)	CHIP TRANSISTOR		
Q2		*	2SK508(K52)	CHIP FET		
Q3			2SC2712(Y)	CHIP TRANSISTOR		
Q4		*	2SK508(K51)	CHIP FET		
DRIVE (X59-3120-00)						
C1 -7			CK73FB1H102K	CHIP C 1000PF K		
C8			CK73FB1H103K	CHIP C 0.010UF K		
C9			CC73FCH1H330J	CHIP C 33PF J		
C10			CC41FCH1H020C	CYLND CHIP C 2.0PF C		
C11			CK73FB1H103K	CHIP C 0.010UF K		
C12			CK73EF1C105Z	CHIP C 1.0UF Z		
			E23-0471-05	TERMINAL		
L1			L40-5672-80	CHIP INDUCTOR (56NH)		
R1 -5			RD41FB2B472J	CYLND CHIP R 4.7K J 1/8W		
R6			RD41FB2B103J	CYLND CHIP R 10K J 1/8W		
R7			RD41FB2B101J	CYLND CHIP R 100 J 1/8W		
R8			RD41FB2B102J	CYLND CHIP R 1.0K J 1/8W		
R9			RD41FB2B223J	CYLND CHIP R 22K J 1/8W		
R10			RD41FB2B472J	CYLND CHIP R 4.7K J 1/8W		
R11			RD41DB2B331J	CYLND CHIP R 330 J 1/8W		
R12			RD41FB2B680J	CYLND CHIP R 68 J 1/8W		
R13			RD41FB2B182J	CYLND CHIP R 1.8K J 1/8W		
R14			RD41FB2B471J	CYLND CHIP R 470 J 1/8W		
R15			RD41FB2B390J	CYLND CHIP R 39 J 1/8W		
R16			RD41FB2B220J	CYLND CHIP R 22 J 1/8W		
R17			R92-0687-05	CHIP R 0 OHM		
R18			R92-0338-05	CLYND CHIP R 0 OHM		
D1			1SS184	CHIP DIODE		
Q1 ,2			2SA1162(Y)	CHIP TRANSISTOR		
Q3			2SC2712(Y)	CHIP TRANSISTOR		
Q4			2SC2714(Y)	CHIP TRANSISTOR		
Q5		*	2SC3837K(N)	CHIP TRANSISTOR		
APC (X59-3130-00)						
C1			CK73FB1H102K	CHIP C 1000PF K		
C2			C92-0501-05	CHIP TAN 1.5UF 10WV		
C3			CK73FB1H472K	CHIP C 4700PF K		

E: Scandinavia & Europe K: USA P: Canada W:Europe
U: PX(Far East, Hawaii) T: England M: Other Areas
UE : AAFES(Europe) X: Australia

TM-221A : K1,M1,M2
TM-221E : T1,W1
TM-221ES : T2,W2

⚠ indicates safety critical components.

PARTS LIST

* New Parts
Parts without Parts No. are not supplied.
Les articles non mentionnes dans le Parts No. ne sont pas fournis.
Telle ohne Parts No. werden nicht geliefert.

Ref. No. 参照番号	Address 位置	New Parts 新	Parts No. 部品番号	Description 部品名／規格	Destination 仕向	Remarks 備考
C4			CK73FB1H102K	CHIP C 1000PF K		
C5			CK73FB1H472K	CHIP C 4700PF K		
C6			CK73FB1H102K	CHIP C 1000PF K		
			E23-0471-05	TERMINAL		
R1			RD41FB2B222J	CYLND CHIP R 2.2K J 1/8W		
R2			RD41FB2B102J	CYLND CHIP R 1.0K J 1/8W		
R3			RD41FB2B152J	CYLND CHIP R 1.5K J 1/8W		
R4 ,5			RD41FB2B103J	CYLND CHIP R 10K J 1/8W		
R6			RD41FB2B122J	CYLND CHIP R 1.2K J 1/8W		
Q1 ,2			FMW1	DIGITAL TRANSISTOR		
Q3			2SA1162(Y)	CHIP TRANSISTOR		
IF (X59-3140-00)						
C1			CK73FB1H102K	CHIP C 1000PF K		
C2			CK73FB1H472K	CHIP C 4700PF K		
C3			CC73FCH1H330J	CHIP C 33PF J		
C4			CK73FB1H472K	CHIP C 4700PF K		
C5			CC73FSL1H561J	CHIP C 560PF J		
C6			CK73FB1H472K	CHIP C 4700PF K		
C7			CK73FB1H103K	CHIP C 0.010UF K		
C8 -10			CK73EB1H104K	CHIP C 0.10UF K		
			E23-0471-05	TERMINAL		
L1			L40-2211-81	SMALL FIXED INDUCTOR(220UH)		
L2		*	L33-0695-05	CHOKE COIL (1MH)		
R1 ,2			RD41FB2B104J	CYLND CHIP R 100K J 1/8W		
R4			RD41FB2B332J	CYLND CHIP R 3.3K J 1/8W		
R5			RD41FB2B182J	CYLND CHIP R 1.8K J 1/8W		
IC1		*	TA7761F	IC		
SQL (X59-3150-00)						
C1			CK73FB1H102K	CHIP C 1000PF K		
C2			CC73FCH1H330J	CHIP C 33PF J		
C4			C92-0005-05	CHIP-TAN 2.2UF 6.3WV		
C5			CK73EF1C105Z	CHIP C 1.0UF Z		
C6		*	C92-0504-05	CHIP-TAN 0.68UF 20WV		
C7 ,8			CK73FB1E393K	CHIP C 0.039UF K		
C9			CK73FB1H153K	CHIP C 0.015UF K		
C10			CK73FB1H333K	CHIP C 0.033UF K		
			E23-0471-05	TERMINAL		
R1			RD41FB2B104J	CYLND CHIP R 100K J 1/8W		
R2			RD41FB2B272J	CYLND CHIP R 2.7K J 1/8W		
R3			RD41FB2B222J	CYLND CHIP R 2.2K J 1/8W		
R4			RD41FB2B223J	CYLND CHIP R 22K J 1/8W		
R5			RD41FB2B332J	CYLND CHIP R 3.3K J 1/8W		
R6			RD41FB2B682J	CYLND CHIP R 6.8K J 1/8W		
R7			RD41FB2B103J	CYLND CHIP R 10K J 1/8W		
R8			RD41FB2B474J	CYLND CHIP R 470K J 1/8W		
R9			RD41FB2B472J	CYLND CHIP R 4.7K J 1/8W		
R10			RD41FB2B474J	CYLND CHIP R 470K J 1/8W		
R11			RD41FB2B273J	CYLND CHIP R 27K J 1/8W		
R12			RD41FB2B223J	CYLND CHIP R 22K J 1/8W		
R13			RD41FB2B222J	CYLND CHIP R 2.2K J 1/8W		

E: Scandinavia & Europe K: USA P: Canada W:Europe
U: PX(Far East, Hawaii) T: England M: Other Areas
UE: AAFES(Europe) X: Australia

TM-221A : K1,M1,M2
TM-221E : T1,W1
TM-221ES : T2,W2

⚠ indicates safety critical components.

PARTS LIST

⁎ New Parts
Parts without Parts No. are not supplied.
Les articles non mentionnes dans le Parts No. ne sont pas fournis.
Telle ohne Parts No. werden nicht geliefert.

Ref. No. 参照番号	Address 位置	New Parts 新	Parts No. 部品番号	Description 部品名／規格	Destination 仕向	Remarks 備考
R14			RD41FB2B393J	CYLND CHIP R 39K J 1/8W		
R15			RD41FB2B273J	CYLND CHIP R 27K J 1/8W		
R16			RD41FB2B331J	CYLND CHIP R 330 J 1/8W		
R17			RD41FB2B222J	CYLND CHIP R 2.2K J 1/8W		
D1			1SS226	CHIP DIODE		
D2			1SS181	CHIP DIODE		
Q1 ,2			2SC2712(Y)	CHIP TRANSISTOR		
Q3 ,4			2SC3295(B)	CHIP TRANSISTOR		
Q5 ,6			2SC2712(Y)	CHIP TRANSISTOR		
MIC (X59-3160-00)						
C1			CK73FB1H223K	CHIP C 0.022UF K		
C2			CK73EF1C105Z	CHIP C 1.0UF Z		
C3			CK73FB1H333K	CHIP C 0.033UF K		
C4 ,5			CK73FB1H223K	CHIP C 0.022UF K		
C6			CK73EF1C105Z	CHIP C 1.0UF Z		
C7			CC73FSL1H101J	CHIP C 100PF J		
C8			CK73FB1H272K	CHIP C 2700PF K		
C9			CK73EF1C105Z	CHIP C 1.0UF Z		
C10			CC73FSL1H101J	CHIP C 100PF J		
C11			CK73FB1H821K	CHIP C 820PF K		
			E23-0471-05	TERMINAL		
R1			RD41FB2B123J	CYLND CHIP R 12K J 1/8W		
R2			RD41FB2B473J	CYLND CHIP R 47K J 1/8W		
R3			RD41FB2B563J	CYLND CHIP R 56K J 1/8W		
R4			RD41FB2B101J	CYLND CHIP R 100 J 1/8W		
R5			RD41FB2B154J	CYLND CHIP R 150K J 1/8W		
R6			RD41FB2B104J	CYLND CHIP R 100K J 1/8W		
R7			RD41FB2B101J	CYLND CHIP R 100 J 1/8W		
R8			RD41FB2B153J	CYLND CHIP R 15K J 1/8W		
R9			RD41FB2B473J	CYLND CHIP R 47K J 1/8W		
R10			RD41FB2B561J	CYLND CHIP R 560 J 1/8W		
R11			RD41FB2B274J	CYLND CHIP R 270K J 1/8W		
R12			RD41FB2B563J	CYLND CHIP R 56K J 1/8W		
R13			RD41FB2B224J	CYLND CHIP R 220K J 1/8W		
R14 -16			RD41FB2B823J	CYLND CHIP R 82K J 1/8W		
R17			RD41FB2B103J	CYLND CHIP R 10K J 1/8W		
R19 ,20			R92-0687-05	CHIP R 0 OHM		
IC1 ,2			NJM4558M	IC(OP AMP X2)		
VOL (X59-3170-00)						
C1 ,2			CK73EB1E104K	CHIP C 0.10UF K		
C3			CK73FF1E104Z	CHIP C 0.10UF Z		
C4			C92-0004-05	CHIP TAN 1UF 16WV		
			E23-0471-05	TERMINAL		
R1 -3			RD41FB2B473J	CYLND CHIP R 47K J 1/8W		
R4			RD41FB2B823J	CYLND CHIP R 82K J 1/8W		
R5			RD41FB2B103J	CYLND CHIP R 10K J 1/8W		
R6			RD41FB2B104J	CYLND CHIP R 100K J 1/8W		
R7			RD41FB2B272J	CYLND CHIP R 2.7K J 1/8W		
R8			RD41FB2B104J	CYLND CHIP R 100K J 1/8W		
R9			RD41FB2B272J	CYLND CHIP R 2.7K J 1/8W		
D1			1SS226	CHIP DIODE		

E: Scandinavia & Europe K: USA P: Canada W:Europe
U: PX(Far East, Hawaii) T: England M: Other Areas
UE: AAFES(Europe) X: Australia

TM-221A : K1,M1,M2
TM-221E : T1,W1
TM-221ES : T2,W2

⚠ indicates safety critical components.

PARTS LIST

⋇ New Parts
Parts without Parts No. are not supplied.
Les articles non mentionnes dans le Parts No. ne sont pas fournis.
Teile ohne Parts No. werden nicht geliefert.

Ref. No. 参照番号	Address 位置	New Parts 新	Parts No. 部品番号	Description 部品名／規格	Destination 仕向	Remarks 備考
IC1		*	LC7532M	IC(BILATERAL SWITCH)		
IC2		*	MN4066BS	IC(QUAD ANALOG SWITCH)		
Q1			DTC144EK	DIGITAL TRANSISTOR		
Q2 ,3			DTA114EK	DIGITAL TRANSISTOR		

E: Scandinavia & Europe K: USA P: Canada W:Europe
U: PX(Far East, Hawaii) T: England M: Other Areas
UE : AAFES(Europe) X: Australia

TM-221A : K1,M1,M2
TM-221E : T1,W1
TM-221ES : T2,W2

⚠ indicates safety critical components.

SEMICONDUCTOR

N : New parts

Item	Remarks	Parts No.
Diode		1S1555
		1S1587
		BA282
		DSA3A1
		MI308
		UM9401
Chip diode	N	1SS153
		1SS181
		1SS184
		1SS226
Chip zener diode		02CZ6.2(Y,Z)
Chip vari-cap diode	N	1SV164
	N	1SV166
Thermister		112-502-2
TR		2SC2538-22-A
	N	2SC3369
		2SD1406(Y)
Chip TR		2SA1162(Y)
		2SB1119S
		2SC2712(Y)
		2SC2714(Y)
		2SC2757(T33)
		2SC3295(B)
		2SC3326(A)
	N	2SC3837K(N)

Item	Remarks	Parts No.
Digital TR		DTA114EK
		DTC124EK
		DTC144EK
		FMW-1
Chip FET	N	2SK508(K51)
	N	2SK508(K52)
	N	3SK131(V12)
		3SK184(S)
Power module		M57726
		M57747
IC	N	KRR-C001
	N	LA5006M
	N	LC7532M
		LC7582
	N	M51951BML
		M54959P
	N	MC7808C
	N	MN4066BS
		NJM4558M
	N	TA7761F
		TC4094BP
		μPC1241H
	N	μPD75106G-508-1B

EXPLODED VIEW

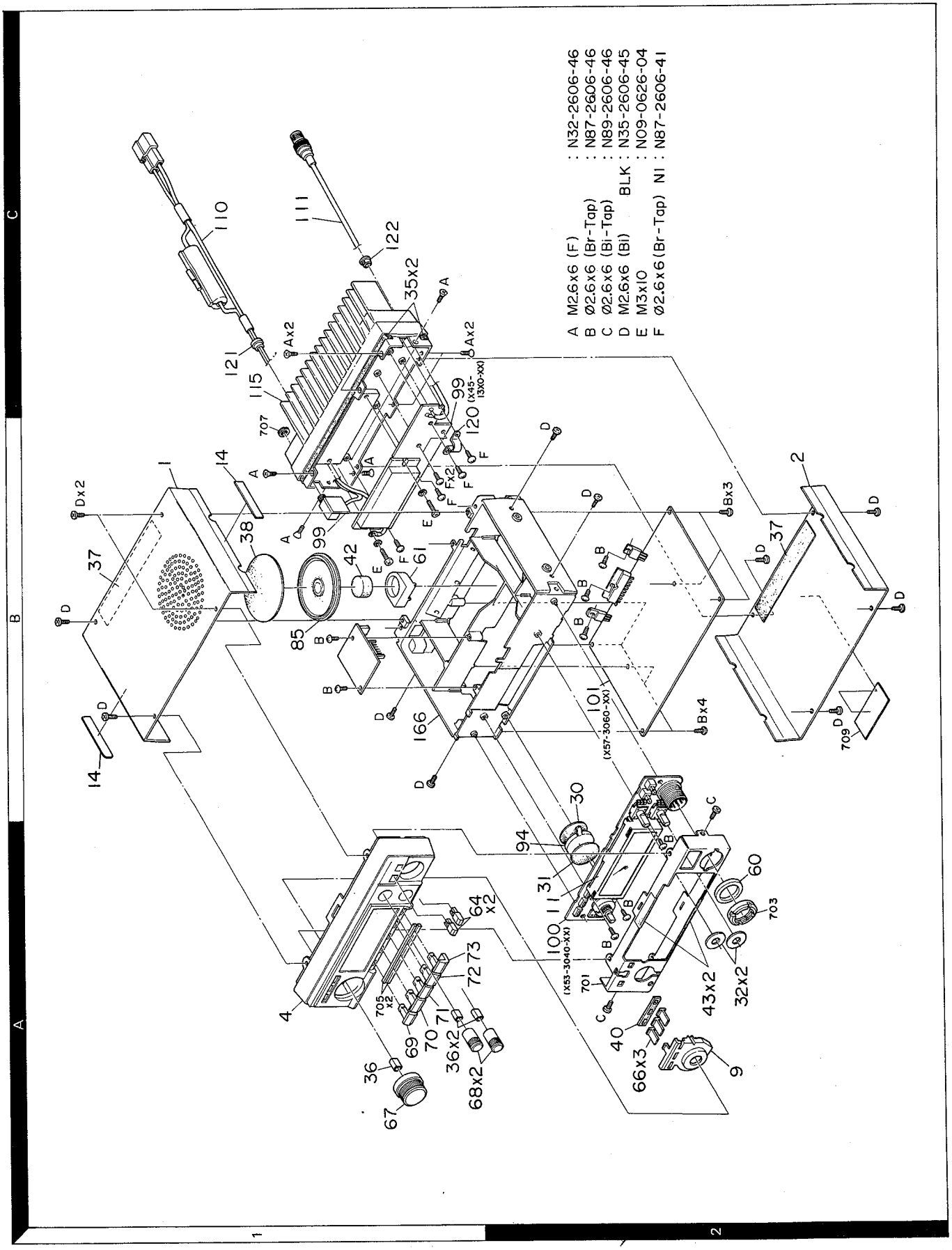

Parts with the exploded numbers larger than 700 are not supplied.

PACKING

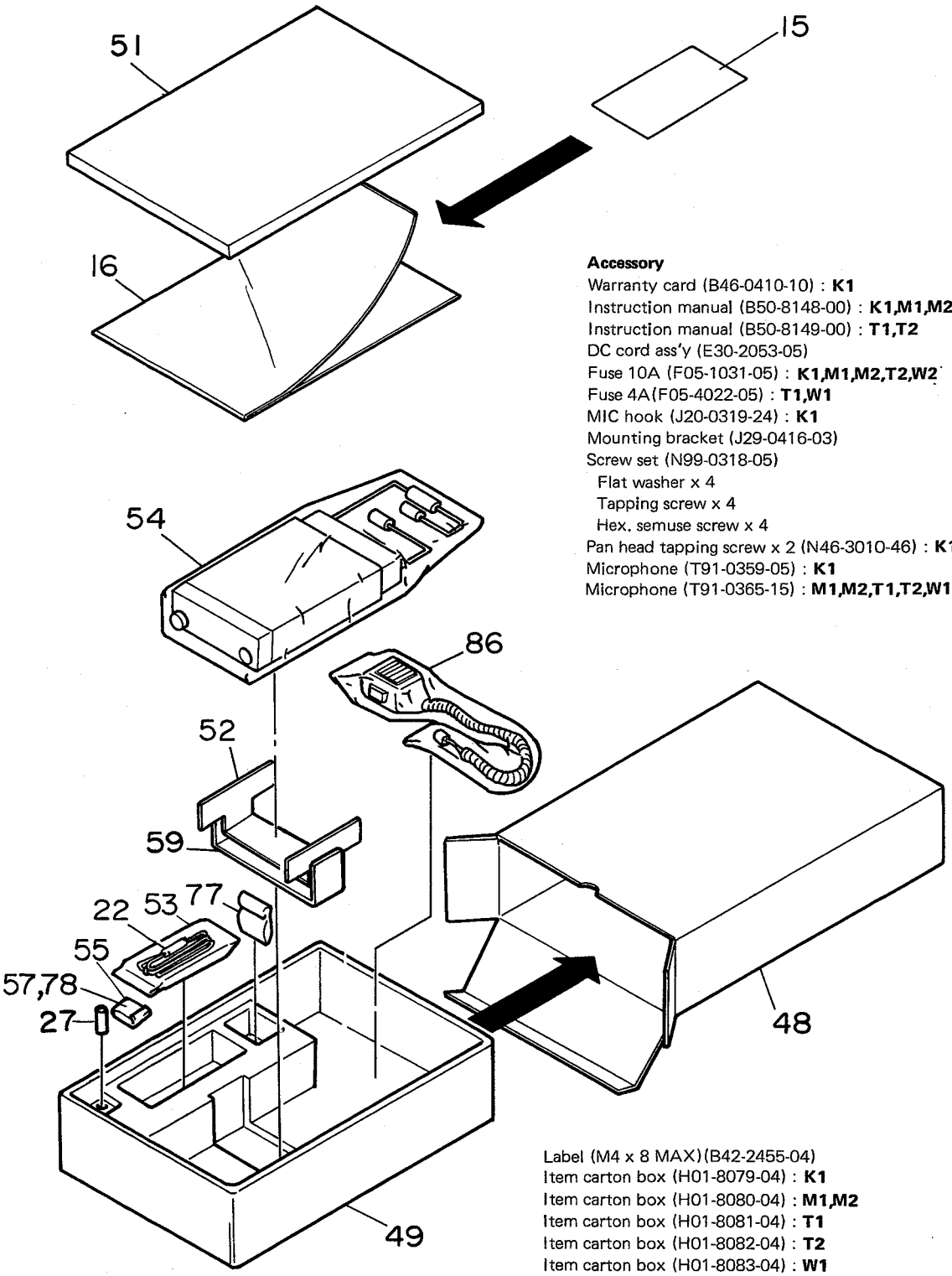

Accessory
Warranty card (B46-0410-10) : **K1**
Instruction manual (B50-8148-00) : **K1,M1,M2,W1,W2**
Instruction manual (B50-8149-00) : **T1,T2**
DC cord ass'y (E30-2053-05)
Fuse 10A (F05-1031-05) : **K1,M1,M2,T2,W2**
Fuse 4A(F05-4022-05) : **T1,W1**
MIC hook (J20-0319-24) : **K1**
Mounting bracket (J29-0416-03)
Screw set (N99-0318-05)
Flat washer x 4
Tapping screw x 4
Hex. semuse screw x 4
Pan head tapping screw x 2 (N46-3010-46) : **K1**
Microphone (T91-0359-05) : **K1**
Microphone (T91-0365-15) : **M1,M2,T1,T2,W1,W2**

Buffer (H13-0814-04)
Protection bag (MIC hook & screw) (H25-0029-04) : **K1**
Protection bag (DC cord ass'y) (H25-0049-03)
Protection bag (TM-221) (H25-0720-04)

Label (M4 x 8 MAX)(B42-2455-04)
Item carton box (H01-8079-04) : **K1**
Item carton box (H01-8080-04) : **M1,M2**
Item carton box (H01-8081-04) : **T1**
Item carton box (H01-8082-04) : **T2**
Item carton box (H01-8083-04) : **W1**
Item carton box (H01-8084-04) : **W2**
Polystyrene foamed fixture (H10-2626-02) : **T1,W1**
Polystyrene foamed fixture (H10-2627-02) : **K1,M1,M2,T2,W2**
Polystyrene foamed plate (H13-0812-04)

Parts with the exploded numbers larger than 700 are not supplied.

DISSASSEMBLY

Replacement of Lithium Battery

1. Remove the eight screws from the upper and lower case (❶). Loosen the four screws on the left and right panel (❷), and remove the upper and lower case.
2. Release the stoppers fixing the front panel and sub-panel (❸), and remove the front panel (❹).

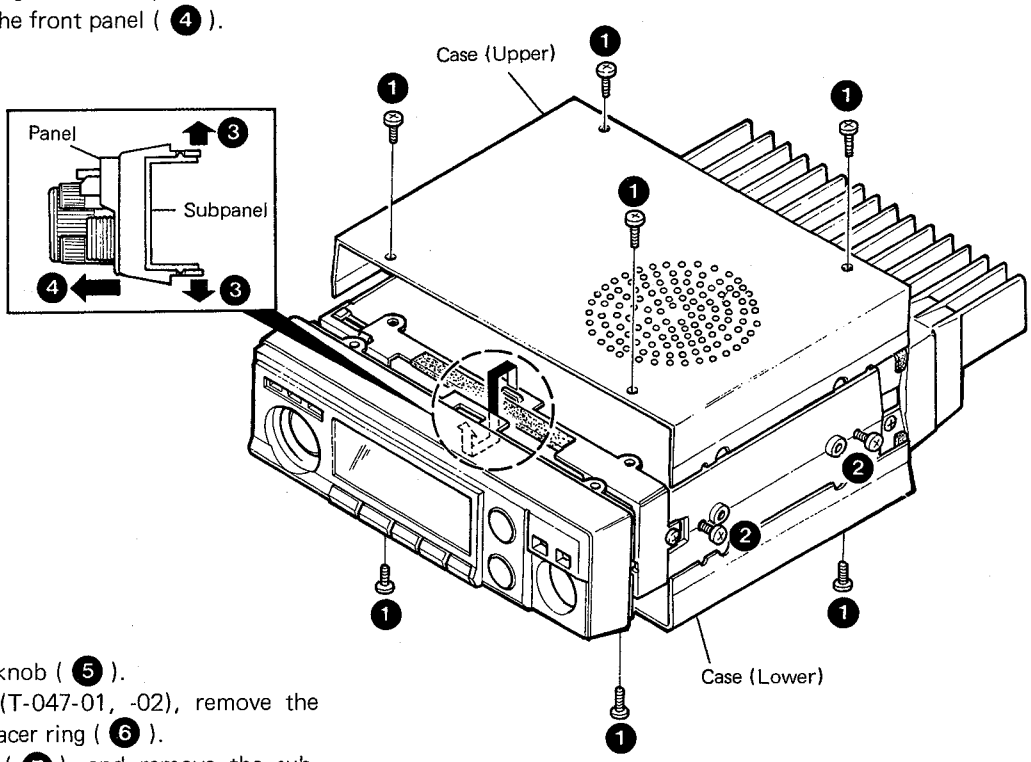

3. Pull out the main control knob (❺).
4. Using the special tools (T-047-01, -02), remove the MIC connector nut and spacer ring (❻).
5. Remove the two screws (❼), and remove the sub-panel.
6. Remove three screw (❽), and remove the Control unit. As it is connected to the TX-RX unit at the rear of it via a connector pin, disconnect it gently when removing.
7. Remove solder from two points (❾), and replace the lithium battery.

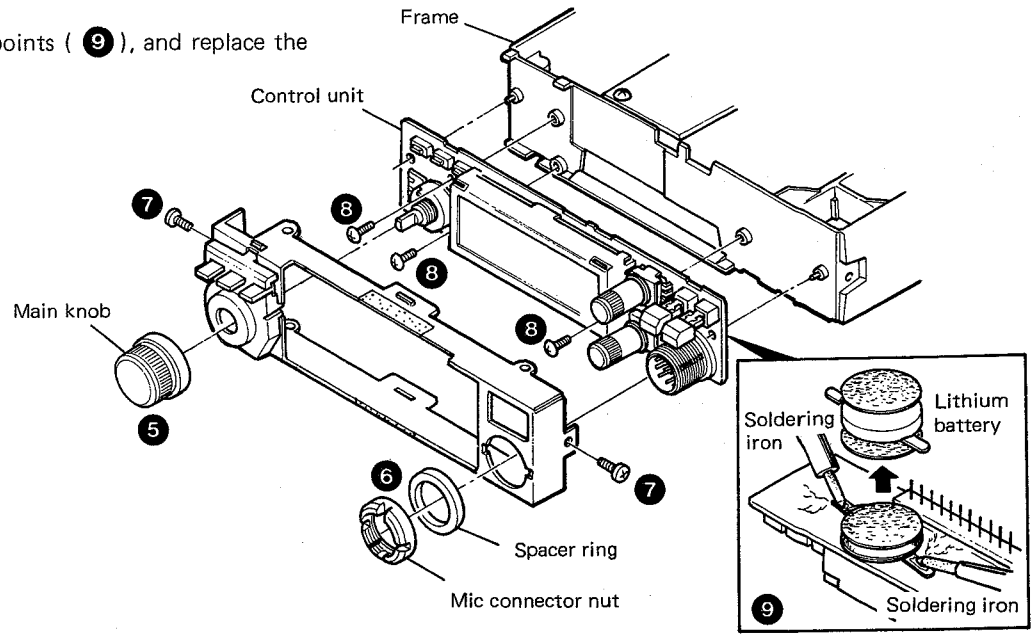

ADJUSTMENT

REQUIRED TEST EQUIPMENT

1. **DC V.M**
   1) High input impedance
2. **RF VTVM (RF V.M)**
   1) Input impedance : 1MΩ min., 2pF max.
   2) Voltage range : F.S = 10mV ~ 300V
   3) Frequency range : Up to 450MHz
3. **Frequency Counter (f. counter)**
   1) Input sensitivity : Approx. 50mV
   2) Frequency range : Up to 450MHz
4. **DC Power Supply**
   1) Voltage : 10V ~ 17V, variable
   2) Current : 6A min.
5. **Power Meter**
   1) Measurement range Approx. : 30W, 3W, 1W
   2) Input impedance : 50Ω
   3) Frequency range : 450MHz
6. **AF VTVM (AF V.M)**
   1) Input impedance : 1MΩ min.
   2) Voltage range : F.S = 1mV ~ 30V
   3) Frequency range : 50Hz ~ 10kHz
7. **AF Generator (AG)**
   1) Output frquency : 100Hz ~ 10kHz
   2) Output voltage : 0.5mV ~ 1V
8. **Linear Detector**
   1) Frequency range : 450MHz
9. **Field Strength Meter**
   1) Frequency range : 450MHz
10. **Directional Coupler**
11. **Oscilloscope**
    1) High sensitivity oscilloscope with horizontal input terminal
12. **SSG**
    1) Frequency range : 144MHz.
    2) Modulation : AM and FM MOD.
    3) Output level : −20dB to 100dB
13. **Dummy Load**
    1) 8Ω, 50W (approx.)
14. **Noise Generator**
    1) Must generate ignition-like noise containing harmonics beyond 450MHz.
15. **Sweep Generator**
    1) Sweep range : 1440MHz and 430MHz bands
16. **Tracking generator**

PREPARATION

1) Unless otherwise specified, knobs and switches should be set as follows **Table 7.**

POWER SW	ON	SHIFT SW	OFF
AF VOL VR	MIN	REV SW	OFF
SQL VOL VR	MIN	SCAN SW.	OFF
LOW SW	OFF	CTCSS SW **(K,M)**	OFF
VFO/M SW	VFO	ALERT SW **(T,W)**	
		TONE SW	OFF

Table 7

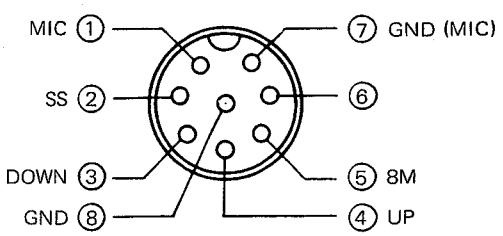

Fig. 18 MIC terminals (view from front panel side)

2) Use an insulated adjusting rod to adjust trimmers and coils.
3) To prevent damaging SSG, never connect the microphone to mic jack while adjusting the receiver section.
4) Be sure to turn the power switch OFF, before connecting the power cable to a power source.
5) SSG output levels are those at the time the output terminal is open.
6) Meter and display section should be set as follows **Fig. 19.**

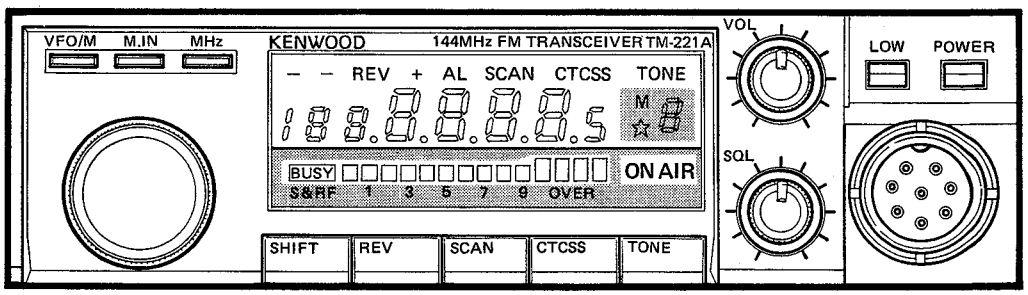

Fig. 19

CIRCUIT DESCRIPTION

COMMON ADJUSTMENT

Item	Condition	Measurement			Adjustment			Specification/Remarks
		Test equipment	Unit	Terminal	Unit	Part	Method	
1. Setting	1) Power supply : 13.8V DC Power SW : OFF VOL VR : Fully counter clockwise (CCW) SQL VR : Fully counter clockwise (CCW) VR6 on TX-RX unit : Fully counter clockwise (CCW)							
2. Reset	1) Turn the power SW ON, holding the VFO/M and M.IN SW down.							Display 145.000 M appeared during 5 sec. then, M disappeared.
	2) Release the VFO/M and M.IN SW.							
3. PLL	1) RX VCO FREQ. : 145.020 Receive.	Digital volt-meter	TX-RX	TP3 (4C)	VCO	TC2 (4B)	3.3V	±0.1V
	2) TX VCO FREQ. : 145.020 Transmit.					TC1 (4B)	4.5V	±0.1V
4. TX FREQ. ADJ.	1) FREQ. : 146.000 **(K,M)** 145.020 **(T,W)** Transmit.	f.counter Power meter	Rear panel	ANT (1E)	TX-RX	TC1 (4D) **(K,M)** TC2 (4C) **(T,W)**	146.000MHz **(K,M)** 145.020MHz **(T,W)**	±100Hz

RECEIVER SYSTEM ADJUSTMENT

Item	Condition	Measurement			Adjustment			Specification/Remarks
		Test equipment	Unit	Terminal	Unit	Part	Method	
1. Helical	1) FREQ. : 146.020 **(K,M)** 145.040 **(T,W)** Connect the sweep gen. to the ANT terminal and the Oscilloscope to the detector output.	Oscilloscope	TX-RX	TP1 (4E)	TX-RX	L1(3E) L2(2E) L19 (3F) **(K,M)** L21 (4F) **(K,M)** L3(3E) **(T,W)**	Adjust for the waveform perform shown on right.	
	2) Connect the spectrum analyzer to the TP1 terminal. from the TX-RX unit.							
	3) Connect the TP3 terminal to GND terminal.							
2. IF trap **(K,M)**	1) FREQ. : 147.500MHz SSG output : 126.110MHz MOD : OFF Output : 60dBμ	Digital multi-meter	TX-RX	TP2 (4D)	TX-RX	L20 (3F)	MAX.	
3. GAIN	1) FREQ. : 146.020 **(K,M)** 145.040 **(T,W)** SSG output : 5dBμ MOD : OFF	Digital multi-meter	TX-RX	TP2 (4D)	TX-RX	L4(4E) L5(4E) L7(4E) L9(4E)	Repeat for MIN. Repeat the adjustment in order of L5 and L7.	Check : Accurate SSG's freq.
4. Discri	1) FREQ. : 146.020 **(K,M)** 145.040 **(T,W)** SSG output : 20dBμ MOD : 1kHz DEV : ±5kHz	AF VM Oscilloscope 8Ω dummy load	Rear panel	SP (1B)	TX-RX	L11 (4D)	AF MAX.	

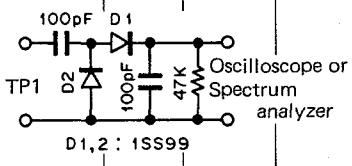

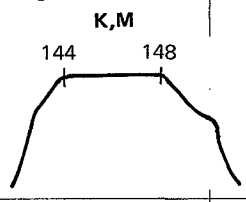

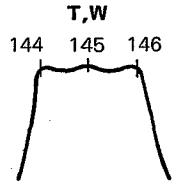

ADJUSTMENT

Item	Condition	Measurement			Adjustment			Specification/Remarks
		Test equipment	Unit	Terminal	Unit	Part	Method	
5. Sensitivity	1) FREQ. : 146.020 **(K,M)** 145.040 **(T,W)** SSG output : −9dBμ	AF VM Oscillo-scope 8Ω dummy load	Rear panel	SP (1B)			Check	SINAD 12dB or more.
	2) FREQ. : 144.020							
	3) FREQ. : 147.980 **(K,M)** 145.960 **(T,W)**							
6. S-meter	1) FREQ. : 146.020 **(K,M)** 145.040 **(T,W)** SSG output : −6dBμ MOD : OFF	LCD (S-meter)			TX-RX	VR1 (4D)	Set the RF scale to reads "2 digit".	
	2) SSG output : 16dBμ						All digits light.	
	3) SSG : OFF							S-meter lights OFF.

TRANSMITTER SYSTEM ADJUSTMENT

Item	Condition	Measurement			Adjustment			Specification/Remarks
		Test equipment	Unit	Terminal	Unit	Part	Method	
1−1. RF output	1) FREQ. : 146.000 **(K,M)** 145.020 **(T,W)** VR6 (TX-RX unit) : Fully clockwise (CW) VR1 (Final unit) : Center Transmit.	Power meter (DC power supply galvo meter)	Rear panel	ANT (1E)	TX-RX	TC3 (3A) TC4 (2B)	MAX	50W or more **(K,M,T2,W2)** 13W or more **(T1,W1)**
								ON AIR LCD indicated.
	2) FREQ. : 147.995 **(K,M)** 145.020 **(T1,W1)** 145.980 **(T2,W2)** Transmit.					VR6 (3B)	47W **(K,M,T2,W2)** 12W **(T1,W1)**	±4W, less than 9.5A **(K,M,T2,W2)** ±2W, less than 2.8A **(T1,W1)**
	3) FREQ. : 144.000 Transmit.						Check	43W or more, less than 9.5A **(K,M,T2,W2)** 10W or more, less than 2.8A **(T1,W1)**
	4) FREQ. : 146.000 **(K,M)** 145.980 **(T1,W1)** 145.000 **(T2,W2)** Transmit.							
1−2. LOW Power	1) FREQ. : 146.000 **(K,M)** 145.020 **(T,W)** LOW SW : ON Transmit.						Check	0.5~2W, less than 1.5A **(T1,W1)**
					TX-RX	VR7 (3B)	5W **(K,M,T2,W2)**	±2W, less than 4A. **(K,M,T2,W2)**
2. RF meter	1) FREQ. : 146.000 **(K,M)** 145.020 **(T,W)** Transmit.	LCD (RF meter)			TX-RX	VR4 (3B)	Set to the RF scale reads "6 digits".	
	2) LOW SW : OFF Transmit.							All digits light.
3. DEV.	1) FREQ. : 146.000 **(K,M)** 145.020 **(T,W)** AG : 1kHz, 50mV **(K,M)** 1kHz, 30mV **(T,W)** ● MS-57A/61A (Anritsu) HPS : OFF LPF : 20kHz	Linear detector Modulation analyzer Power meter	Rear panel	ANT (1E)	TX-RX	VR3 (3C)	±4.4kHz	±200Hz
	2) AG : 1kHz, 5mV **(K,M)**				TX-RX	VR2 (3C)	±3kHz **(K,M)**	±200Hz **(K,M)**
	1kHz, 3mV **(T,W)**						Check	±2.2~3.6kHz **(T,W)**

ADJUSTMENT

Item	Condition	Measurement			Adjustment			Specification/Remarks
		Test equipment	Unit	Terminal	Unit	Part	Method	
4. Protection	1) FREQ. : 146.000 **(K,M)** 145.020 **(T,W)** Transmit.	Power meter Digital multi-meter	Final	TP1 (2E)	Final	VR1 (2E)	Dip point 	
	2) Disconnect the power meter from ANT terminal. **(K,M,T2,W2)** ANT : Shorted to GND **(T1,W1)** Transmit.	DC AM (DC power supply galvo-meter)			TX-RX	VR5 (3C)	5A **(K,M,T2,W2)** 2.2A **(T1,W1)**	±0.5A **(K,M,T2,W2)** ±0.2A **(T1,W1)**
5–1. TONE **(K,M)**	1) FREQ. : 146.000 TONE SW : ON Transmit	Linear detector Modula-tion analyzer Power meter f.counter	Rear panel	ANT (1E)				FREQ. : 88.0~89.0Hz DEV. : ±0.5~1kHz
5–2. TONE **(T,W)**	1) FREQ. : 145.020 TONE SW : ON Transmit.			ANT (1E)				FREQ. : 1750±10Hz DEV. : ±2.5kHz or more

Microprocessor operation check

Item	Condition	Operation check
1. Reset	1) Turn the Power switch ON holding the VFO/M and M.IN switches down.	Display 145.000 The M0 indicator and the Memory channel number display light for approx. 5 sec. after release the switches.
	2) Release the VFO/M and M.IN switches.	
2. FREQ. step selec-tion	1) Press the M.IN switch.	M indicator lights.
	2) Press the M.IN switch, then press the REV switch within 5 sec.	Display 00000005 Turn the Tuning control and the UP/DOWN switches to increase or decrease the figures as shown below. (T,W) 20←25 ←5→10→12.5 ↓ ↓ 15 CCW CW 15 ↓ ↓ 12.5→10→5←25←20 (T,W)
	3) Press any switch except the LOW and the Power switches to return to the normal receive FREQ.	Receive FREQ. lights. (to return to the normal FREQ.)
3. FREQ. step selec-tion (MHz)	1) Press the MHz switch.	The kHz digits goes off.
	2) Turn the Tuning control switch to CW or CCW.	Rotating the Tuning control switch changes the FREQ. in 1MHz step.
	3) Press any switch except the LOW and the Power switches to return to the normal receive FREQ.	The kHz digits lights.

Item	Condition	Operation check
4–1. Memory entry (simplex standard offsets)	Simplex memory channels are; M0~9, MA, b. Determine the desired FREQ., SHIFT, CTCSS, TONE FREQ. then follow the procedure below.	
	1) Press the M.IN switch.	The memory channel number display lights.
	2) Select the desired memory channel using the Tuning control or the Microphone UP/DOWN switch. This selection should be completed within 5 sec. after the M.IN switch is pressed.	
	3) Press the M.IN switch within 5 sec. after the memory channel selec-tion is completed.	Memory entry is completed.
4–2. Odd split memory channels	1) Select the desired FREQ. using the Tuning control or the Microphone UP/DOWN switch. (as described in Item 4–1.)	

ADJUSTMENT

Item	Condition	Operation check
4–2. Odd split memory channels	2) Press the M.IN switch	The beeper sound changes. [M] indicator lights. The memory channel number display is not light.
	The receive FREQ. memory entry is completed, then changes to the waiting mode of the transmit FREQ. memory entry.	
	4) Select the desired transmit FREQ. using the Tuning control or the Microphone UP/DOWN switch.	
	5) Press the M.IN switch.	Memory entry is completed.
5. TONE FREQ.	1) Press the M.IN switch and then TONE switch. (within 5 sec. after pressing the M.IN switch.)	TONE FREQ. lights.
	2) Select the desired TONE FREQ. using the Tuning control or the Microphone UP/DOWN switch. (a value in the 67.0 to 250.3)	

Item	Condition	Operation check
5. TONE FREQ.	3) Press any switch except the LOW and the Power switches to return to the normal VFO FREQ.	Receive FREQ. lights.
6. Memory channel lockout selection	1) Press the VFO/M switch to select the memory channel mode.	[0] indicator lights.
	2) Select the desired memory channel to skip using the Tuning control or the Microphone UP/DOWN switch.	
	3) Press the M.IN switch and the SCAN switch. When the M.IN switch is pressed, the M indicator lights. The SCAN switch should be pressed within 5 sec. after the M.IN switch is pressed, or the M indicator goes off.	[★3] indicator lights. The asterisk (★) lights in the left of the memory channel number display. The indicated memory channel is skipped during SCAN operation.

ADJUSTMENT

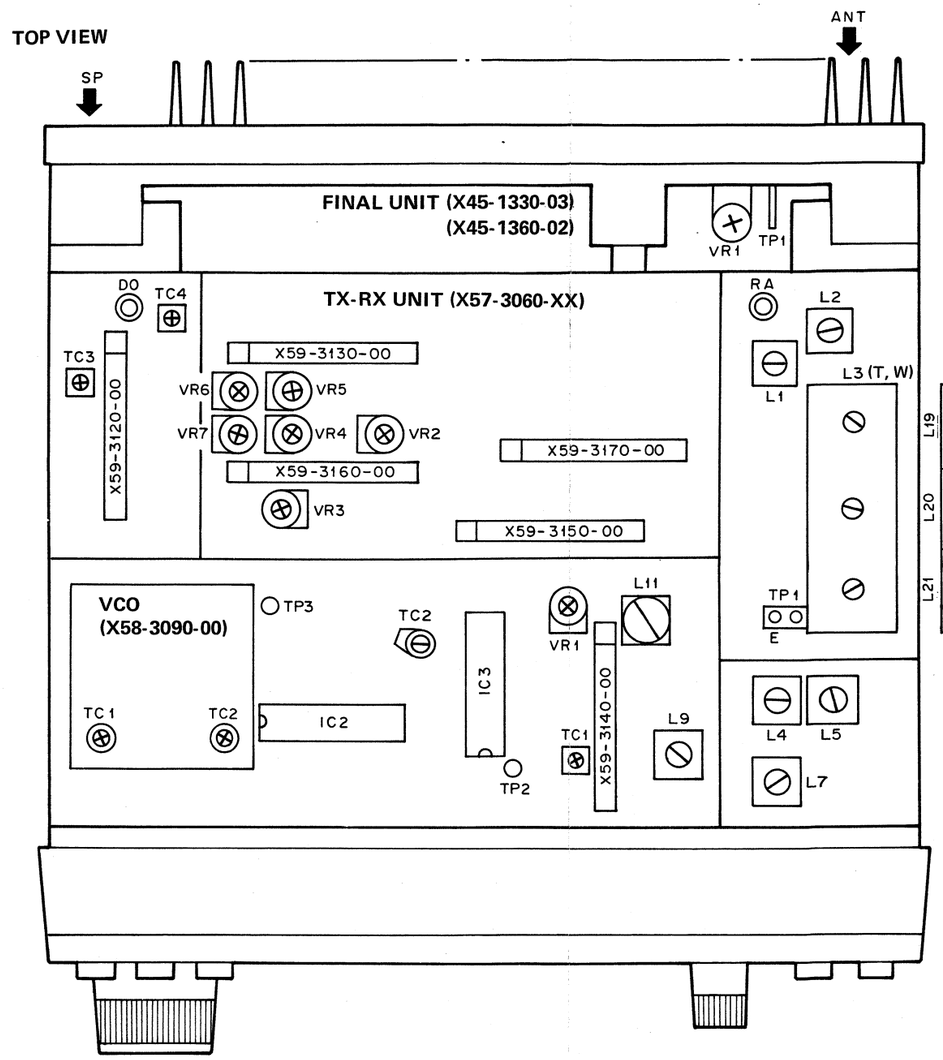

TX-RX UNIT (X57-3060-XX)
VR1 : S-1
VR2 : DEV. 1kHz, 5mV, ±3kHz (**K, M**)
VR3 : DEV. 1kHz, 50mV (**K, M**), 30mV (**T, W**), ±4.4kHz
VR4 : RF meter
VR5 : PRO.
VR6 : RF output
VR7 : Low power (**K, M, T2, W2**)
L1,2 : Helical
L3 : Helical (**T, W**)
L4,5,7,9 : IF GAIN
L11 : Discri.
L19,21 : Helical (**K, M**)
L20 : IF trap (**K, M**)
TC1 : TX frequency (**K, M**)
TC2 : TX frequency (**T, W**)
TC3,4 : TX power

FINAL UNIT (X45-1330-03) : TM-221E
(X45-1360-02) : TM-221A/ES
VR1 : PRO. (NULL)

VCO (X58-3090-00)
TC1 : TX VCO
TC2 : RX VCO

TM-221A/E/ES PC BOARD VIEWS

LCD ASS'Y (B38-0303-05) Component side view

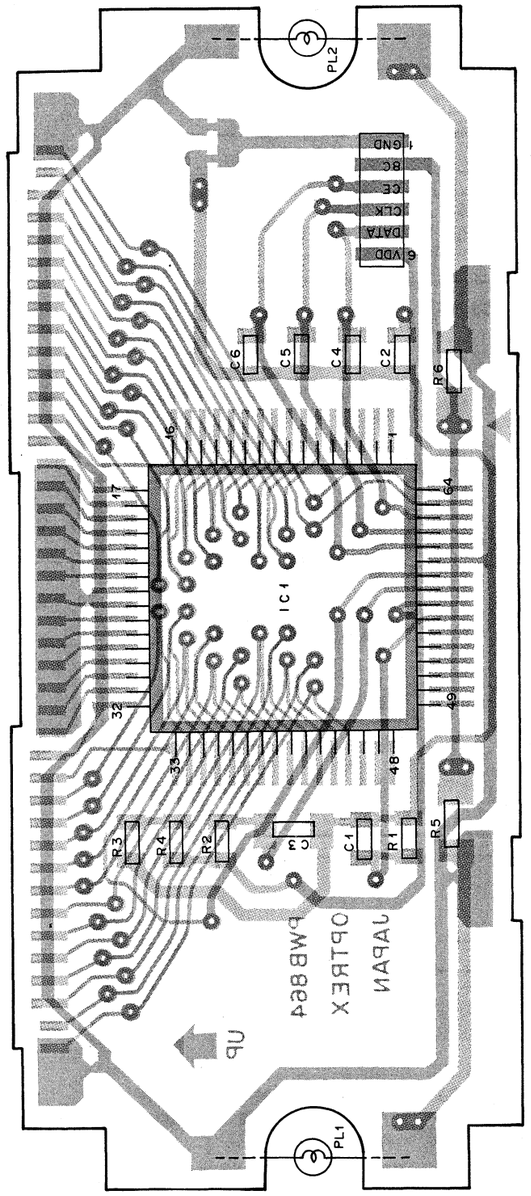

IC1 : LC7582

VCO (X58-3090-00) Component side view

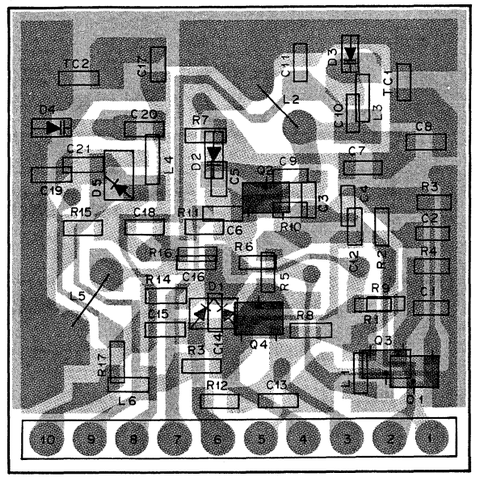

Q1 : 2SC2757(T33) Q2 : 2SK508(K52)
Q3 : 2SC2712(Y) Q4 : 2SK508(K51)
D1 : 1SS184 D2 : 1SV164
D3,4 : 1SV166 D5 : 1SS153

DRIVE (X59-3120-00) Component side view

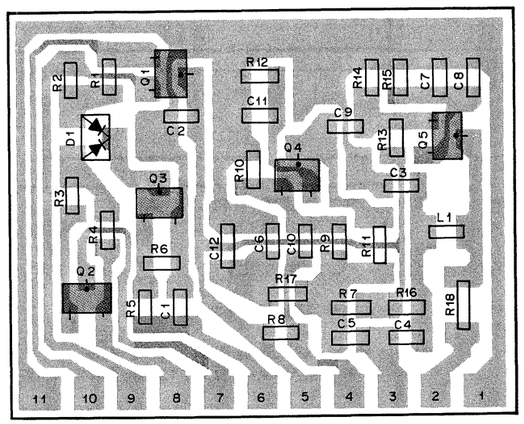

Q1,2 : 2SA1162(Y) Q3 : 2SC2712(Y)
Q4 : 2SC2714(Y) Q5 : 2SC3837K(N)
D1 : 1SS184

APC (X59-3130-00) Component side view

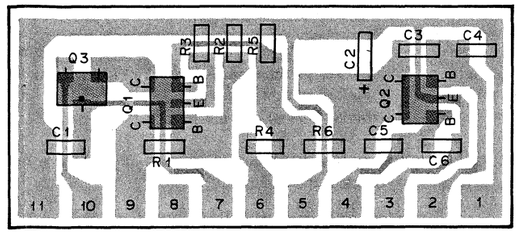

Q1,2 : FMW-1 Q3 : 2SA1162(Y)

MIC (X59-3160-00) Component side view

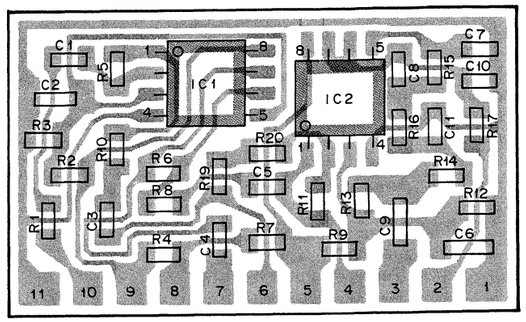

IC1,2 : NJM4558M

IF (X59-3140-00) Component side view

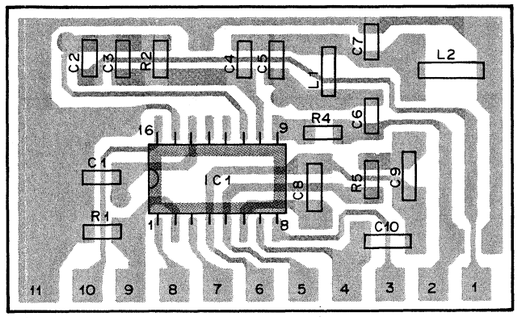

IC1 : TA7761F

VOL (X59-3170-00) Component side view

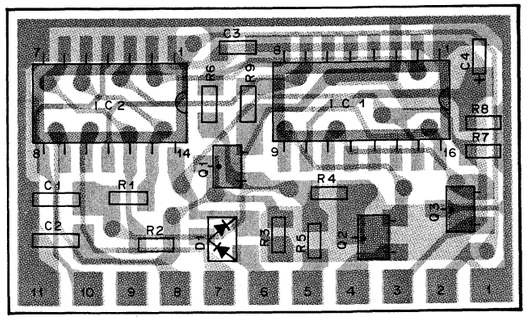

Q1 : DTC144EK Q2,3 : DTA114EK
IC1 : LC7532M IC2 : MN4066BS
D1 : 1SS226

SQL (X59-3150-00) Component side view

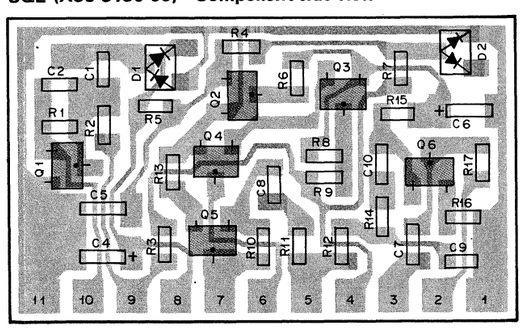

Q1,2,5,6 : 2SC2712(Y) Q3,4 : 2SC3295(B)
D1 : 1SS226 D2 : 1SS181

2SA1162 2SC2757
2SC2712 2SC3295
2SC2714 2SC3837K

2SK508

FMW-1

DTC144EK

DTA114EK

PC BOARD VIEWS TM-221A/E/ES

FINAL UNIT (X45-1330-03) : TM-221E
(X45-1360-02) : TM-221A/ES
Component side view

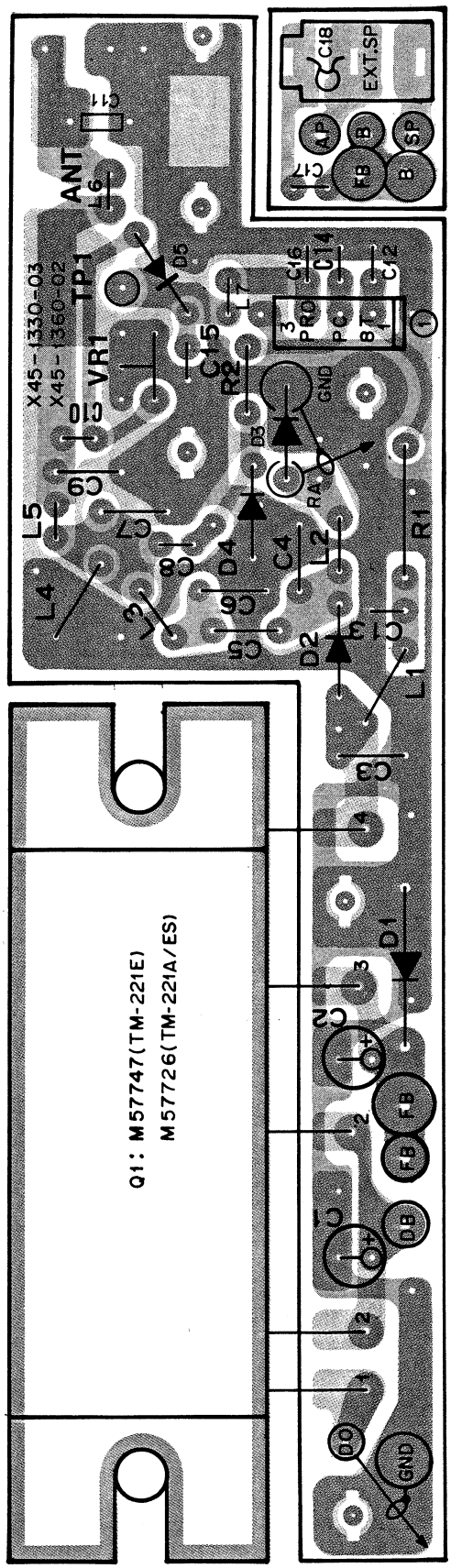

FINAL UNIT (X45-1330-03) : TM-221E
(X45-1360-02) : TM-221A/ES
Foil side view

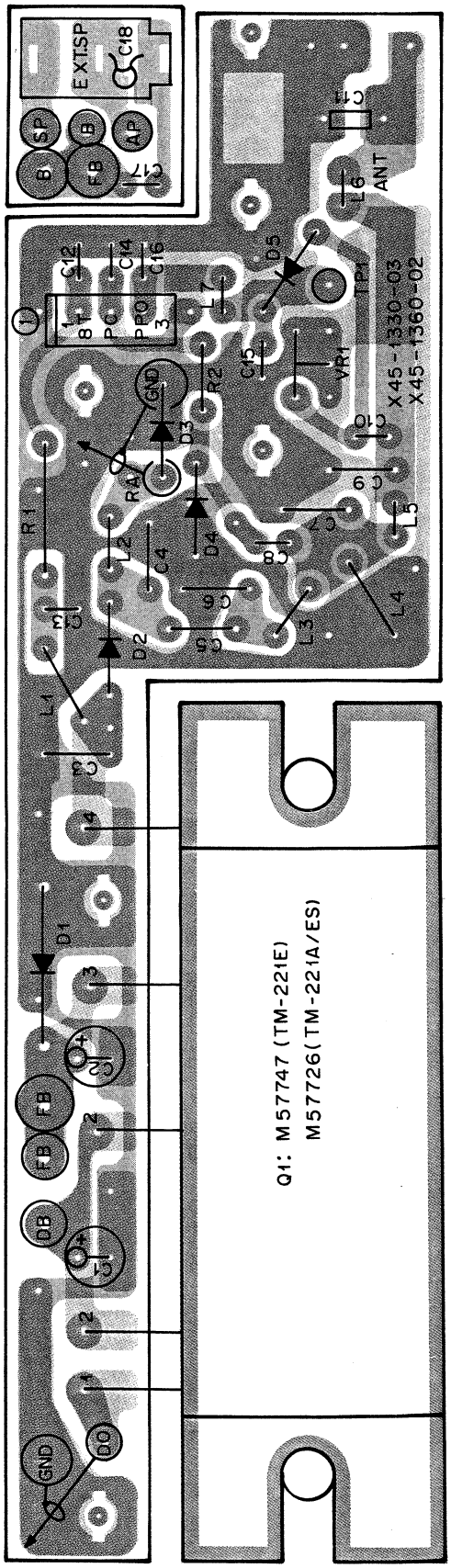

C18 : TM-221E ONLY

Q1 : M57747 (**TM-221E**) , M57726 (**TM-221A, TM-221ES**)
D1 : DSA3A1 D2 : MI308 (**TM-221E**) , UM9401 (**TM-221A, TM-221ES**) D3 : MI308 D4,5 : 1S1587

TM-221A/E/ES PC BOARD VIEWS

CONTROL UNIT (X53-3040-XX)
Component side view

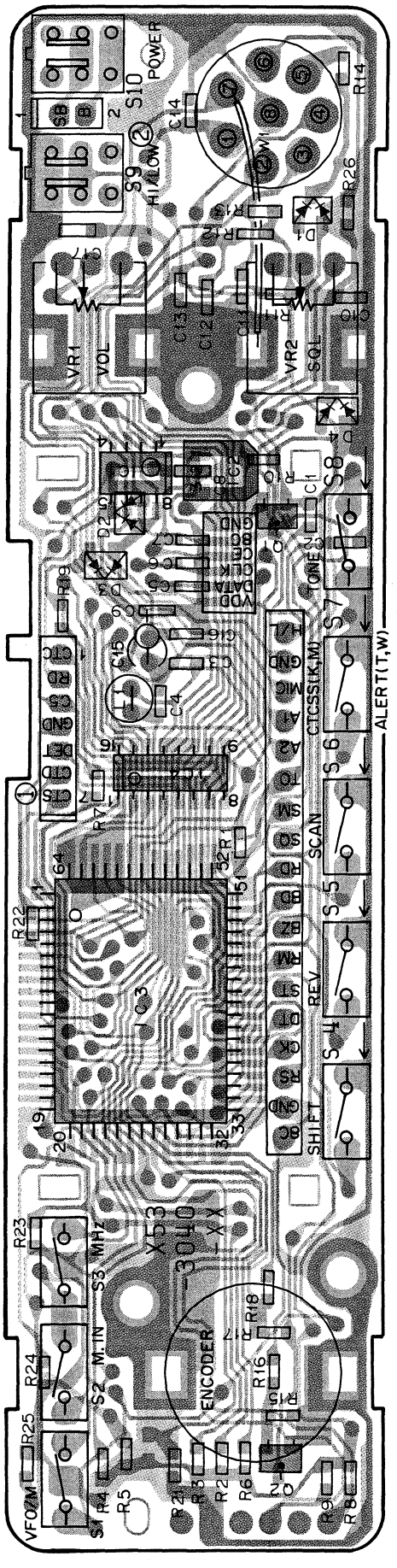

CONTROL UNIT (X53-3040-XX)
Foil side view

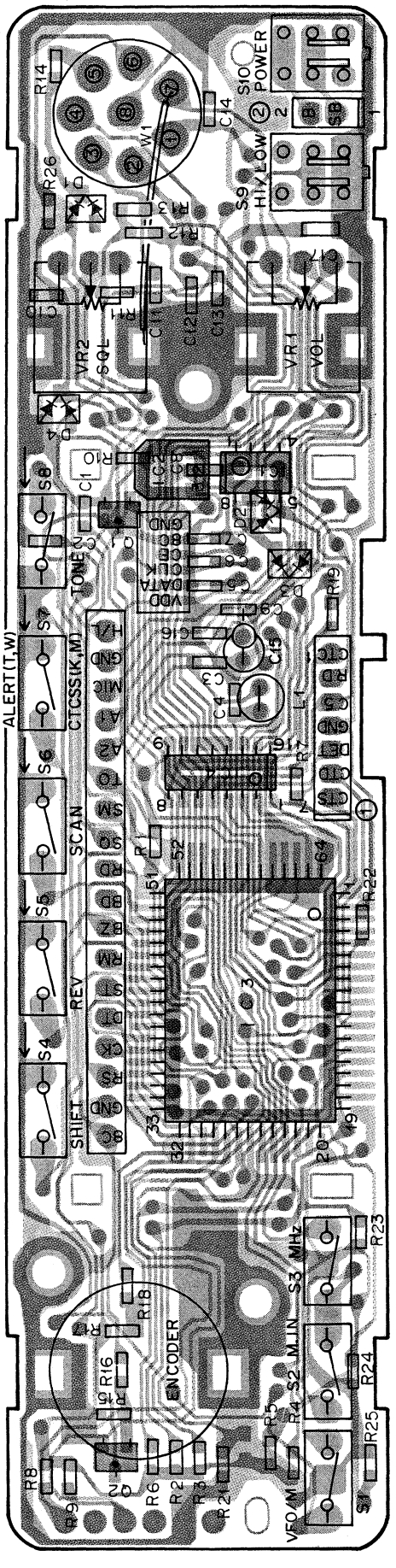

		R22	R23	R24	R25
TM-221A	-11 (K)	O	X	X	O
	-21 (M1)	O	X	O	O
	-22 (M2)	X	O	X	X
TM-221E/ES	-51 (T1, T2)	X	X	O	X
	-61 (W1, W2)	X	O	X	X

O : Used, X : Not used

Q1 : DTC124EK Q2 : 2SC2712(Y)
IC1 : LA5006M IC2 : M51951BML IC3 : μPD75106G-508-1B IC4 : KRR-C001
D1–4 : 1SS184

TX-RX UNIT (X57-3060-11) : K,M1,M2 Component side view

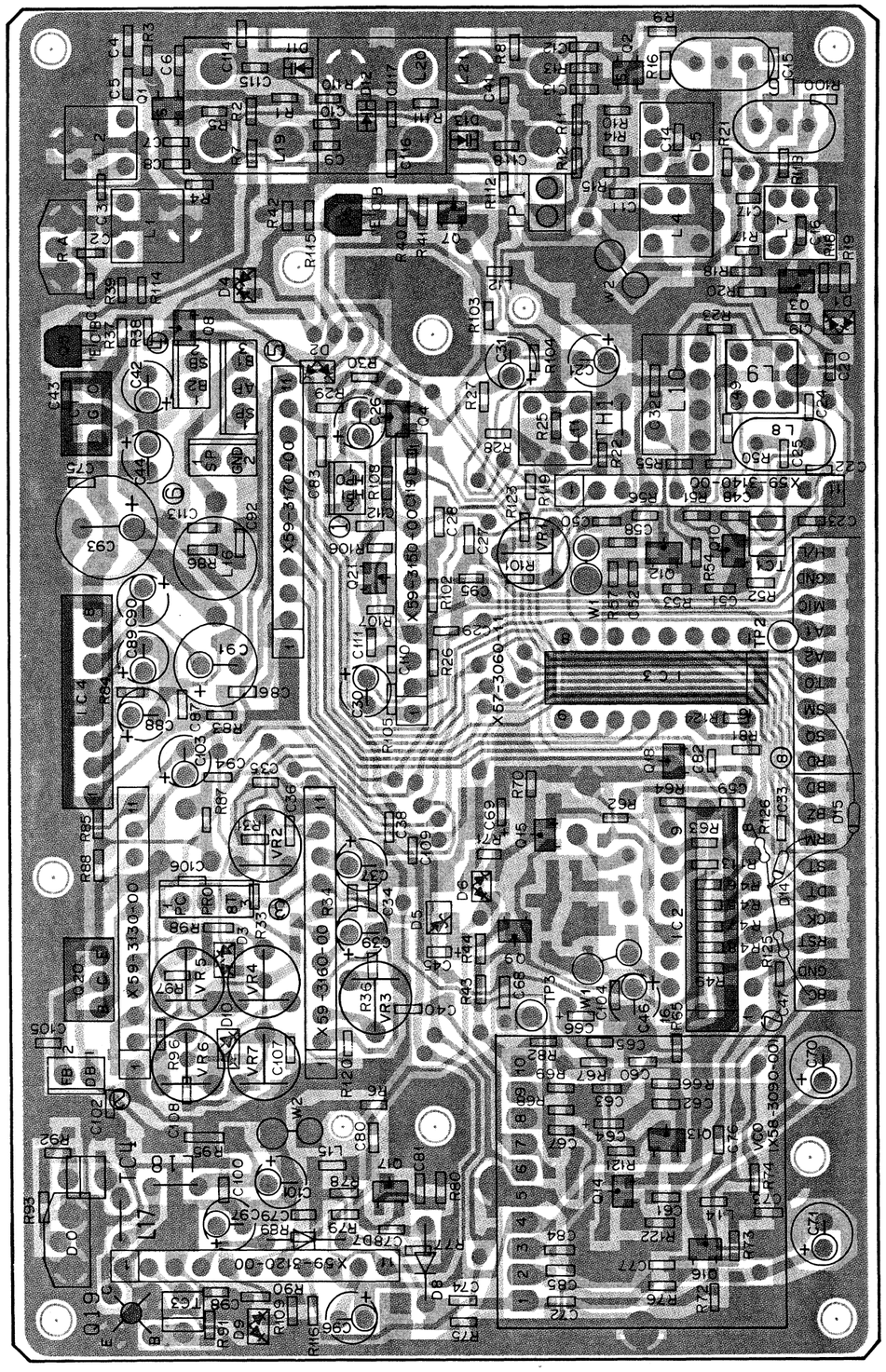

TX-RX UNIT (X57-3060-11) : K,M1,M2 Foil side view

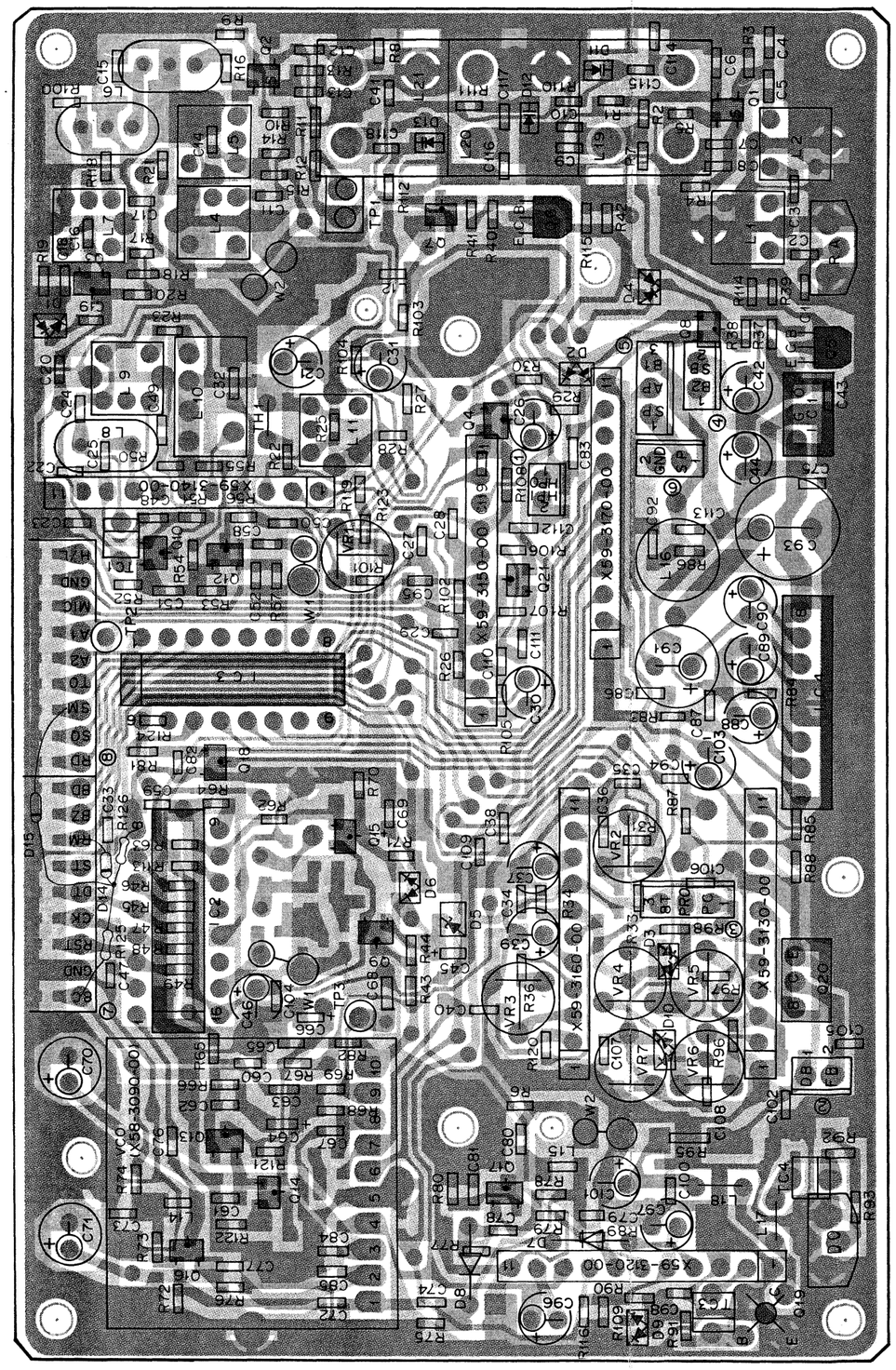

2SD1406

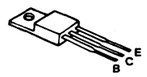

2SC3369

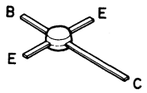

2SB1119S

MC7808C

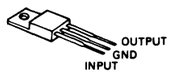

2SA1162
2SC2712
2SC2714
2SC3326

DTC124EK

3SK131
3SK184

μPC1241H

M51951BML

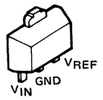

Q1 : 3SK184(S) Q2 : 3SK131(V12) Q3,10,12,16,17 : 2SC2714(Y) Q4 : 2SC3326(A) Q5,6 : 2SB1119S
Q9,13,14,18,21 : 2SC2712(Y) Q15 : 2SA1162(Y) Q19 : 2SC3369 Q20 : 2SD1406(Y)
IC1 : MC7808C IC2 : M54959P IC3 : TC4094BP IC4 : μPC1241H
D1 : 1SS226 D2,6,9,10 : 1SS181 D3,4 : 1SS184 D5 : 02CZ6.2(Y,Z) D7,8 : BA282 D11–13 : 1SV164 D14,15 : 1S1555

TM-221A/E/ES PC BOARD VIEWS

TX-RX UNIT (X57-3060-XX) -51 : T1,W1 -52 : T2,W2 Component side view

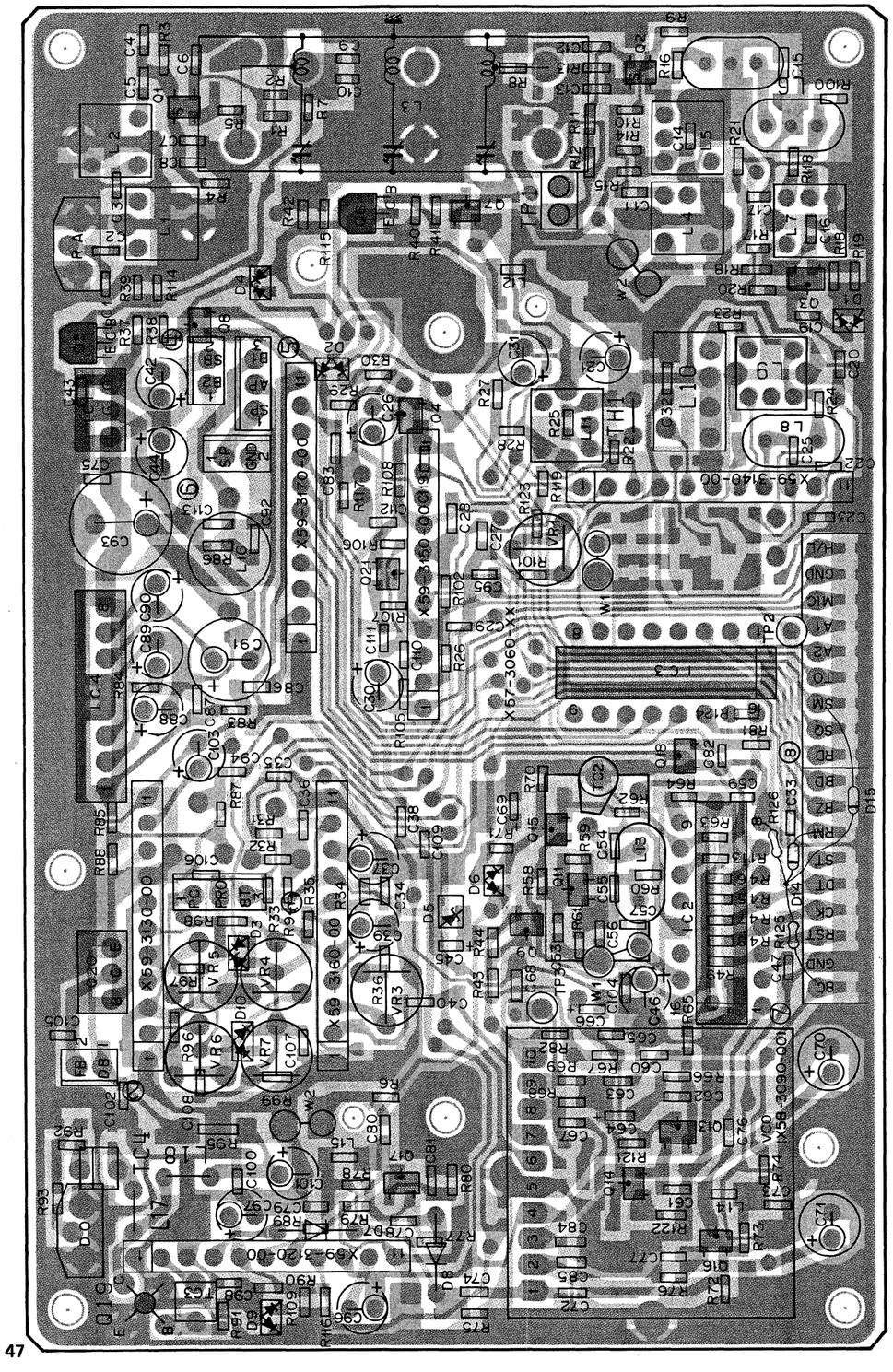

		VR7	R99
TM-221E	-51 (T1,W1)	X	O
TM-221ES	-52 (T2,W2)	O	X

O : Used, X : Not used

Q1 : 3SK184(S) Q2 : 3SK131(V12) Q3,11,16,17 : 2SC2714(Y) Q4 : 2SC3326(A) Q5,6 : 2SB1119S Q7,8 : DTC124EK
Q9,13,14,18,21 : 2SC2712(Y) Q15 : 2SA1162(Y) Q19 : 2SC2538-22-A (**TM-221E**) , 2SC3369 (**TM-221ES**) Q20 : 2SD1406(Y)
IC1 : MC7808C IC2 : M54959P IC3 : TC4094BP IC4 : μPC1241H
D1 : 1SS226 D2,6,9,10 : 1SS181 D3,4 : 1SS184 D5 : 02CZ6.2(Y,Z) D7,8 : BA282 D14,15 : 1S1555

TX-RX UNIT (X57-3060-XX) -51 : T1,W1 -52 : T2,W2 Foil side view

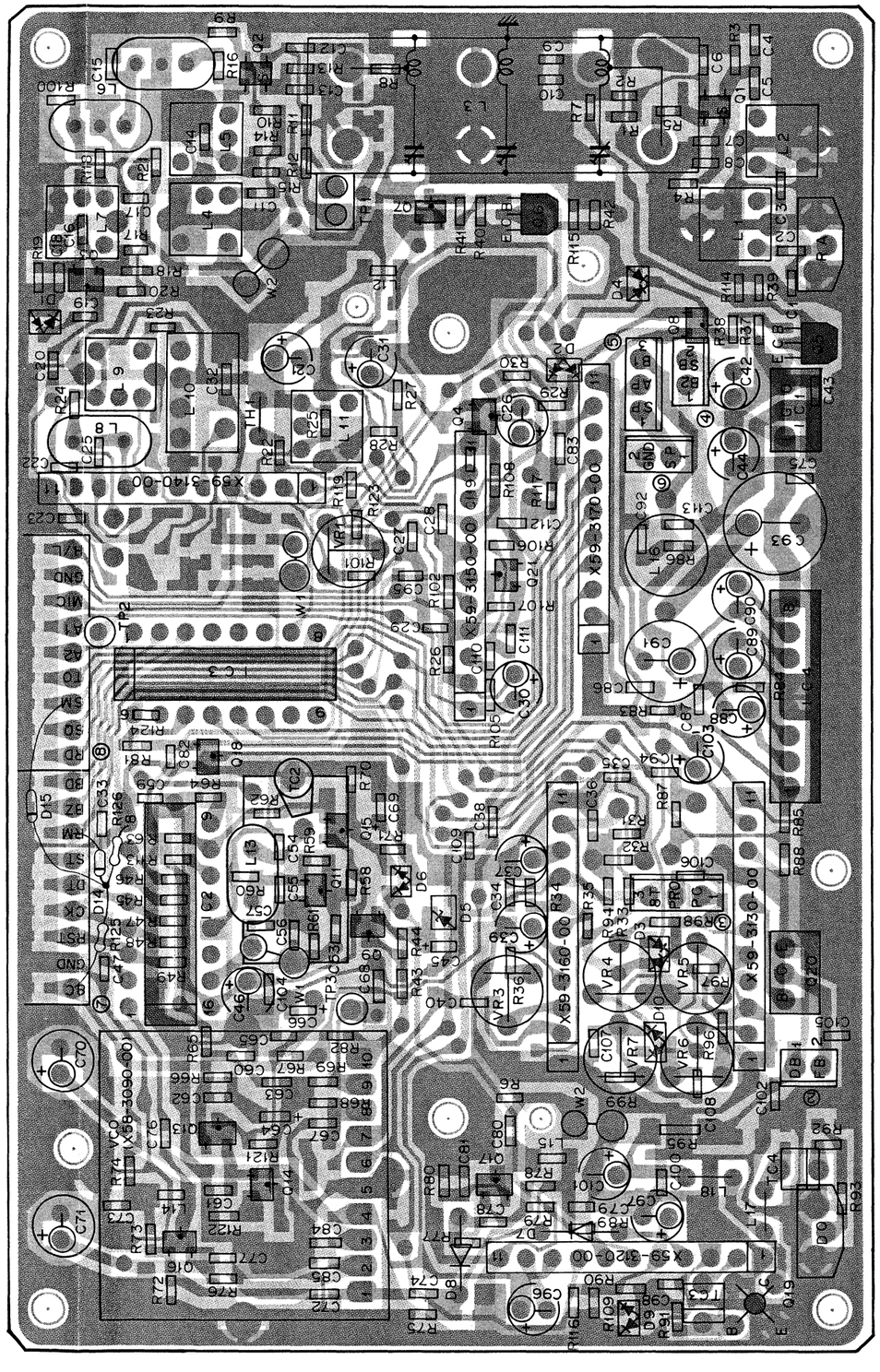

2SC2538-22-A

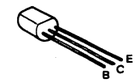

2SD1406

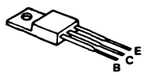

2SC3369

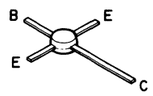

2SB1119S

MC7808C

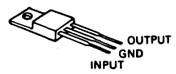

2SA1162
2SC2712
2SC2714
2SC3326

DTC124EK

3SK131
3SK184

μPC1241H

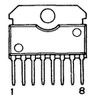

SCHEMATIC DIA

Signal line — Control line — Common DC line

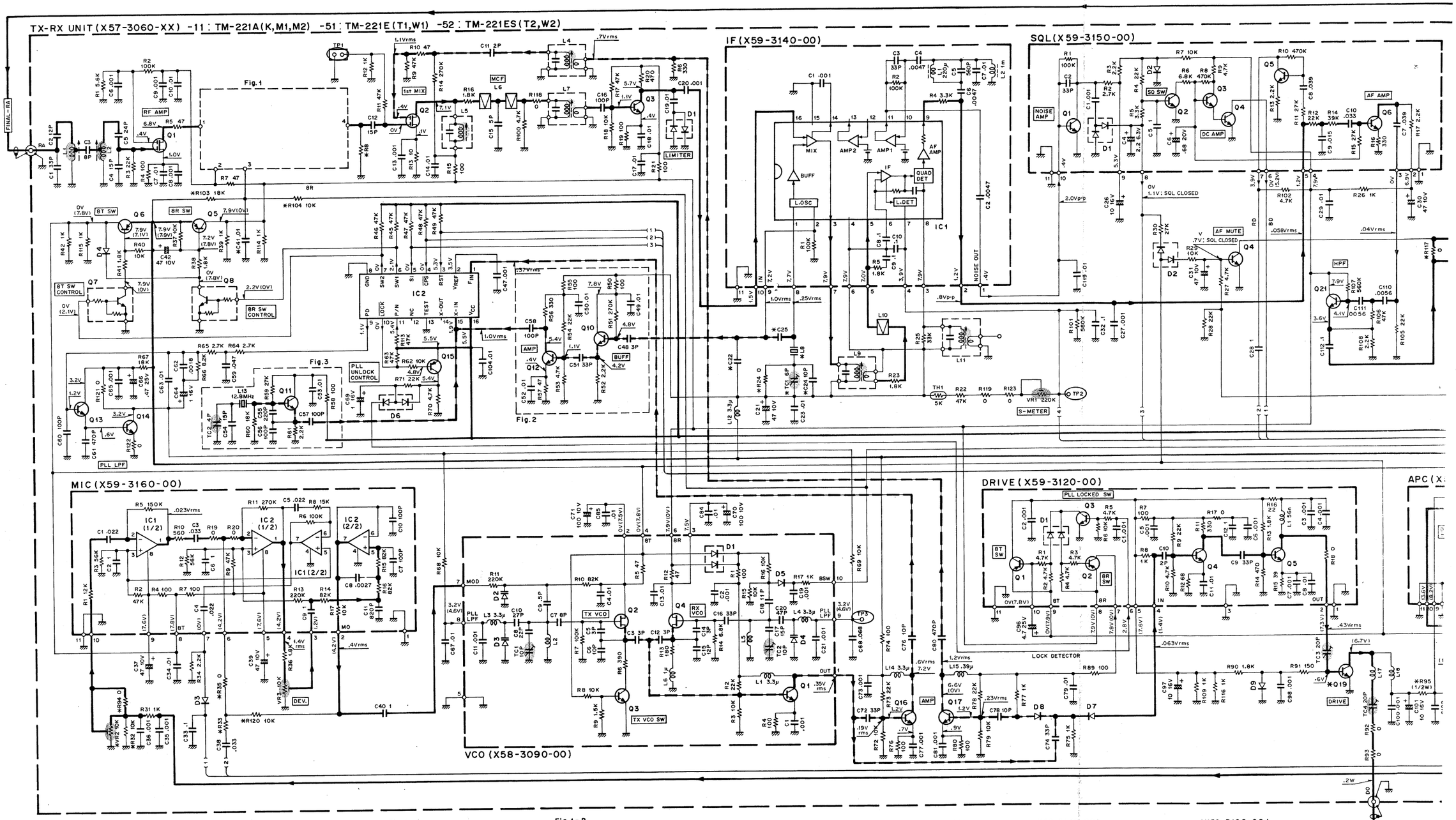

Q1	: 3SK184(S)	IC1	: MC7808C
Q2	: 3SK131(V12)	IC2	: M54959P
Q3,10~12,16,17	: 2SC2714(Y)	IC3	: TC4094BP
Q4	: 2SC3326(A)	IC4	: μPC1241H
Q5,6	: 2SB1119S		
Q7,8	: DTC124EK	D1	: 1SS226
Q9,13,14,18,21	: 2SC2712(Y)	D2,6,9,10	: 1SS181
Q15	: 2SA1162(Y)	D3,4	: 1SS184
Q20	: 2SD1406(Y)	D5	: 02CZ6.2(Y,Z)
		D7,8	: BA282
TH1	: 112-502-2	D11~13	: 1SV164
		D14,15	: 1S1555

Fig.1-A

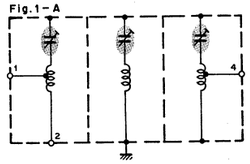

Fig.1-B

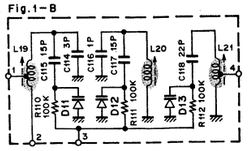

(X58-3090-00)
Q1 : 2SC2757(T33)
Q2 : 2SK508(K52)
Q3 : 2SC2712(Y)
Q4 : 2SK508(K51)

D1 : 1SS184
D2 : 1SV164
D3,4 : 1SV166
D5 : 1SS153

(X59-3120-00)
Q1,2 : 2SA1162(Y)
Q3 : 2SC2712(Y)
Q4 : 2SC2714(Y)
Q5 : 2SC3837K(N)

D1 : 1SS184

(X59-3130-00)
Q1,2 : FMW-1
Q3 : 2SA1162(Y)

(X59-3140-00)
IC1 : TA7761F

(X59-3150-00)
Q1,2,5,6 : 2SC2712(Y)
Q3,4 : 2SC3295(B)

D1 : 1SS226
D2 : 1SS181

(X59-3160-00)
IC1,2 : NJM4558M

(X59-3170-00)
Q1 : DTC144EK
Q2,3 : DTA114EK

IC1 : LC7532M
IC2 : MN4066BS

D1 : 1SS226

O : USED
X : NOT USED

	Q19	VR2	VR7	L8	TC1	R8	R24	R32	R33	R35	R94	R95	R96	R97	R99	R103	R104	R117	R120	C22	C24	C25	C41	Fig.1	Fig.2	Fig.3	Connector ①
TM-221A (45W) -11	2SC3369	O	O	10.24MHz	O	1.8K	X	X	100K	X	X	22	100K	10K	X	O	O	X	O	330P	O	180P	O	B	O	X	O
TM-221E (10W) -51	2SC2538-22-A	X	X	10.245MHz	X	2.2K	O	O	22K	O	O	33	47K	4.7K	O	X	X	O	X	150P	X	33P	X	A	X	O	X
TM-221ES (45W) -52	2SC3369	X	O	10.245MHz	X	2.2K	O	O	22K	O	O	22	100K	10K	X	X	X	O	X	150P	X	33P	X	A	X	O	X

HEMATIC DIAGRAM

Voltage measurement conditions f = 144.00MHz, RX no signal, ( ) : TX.

TM-221A/E/ES

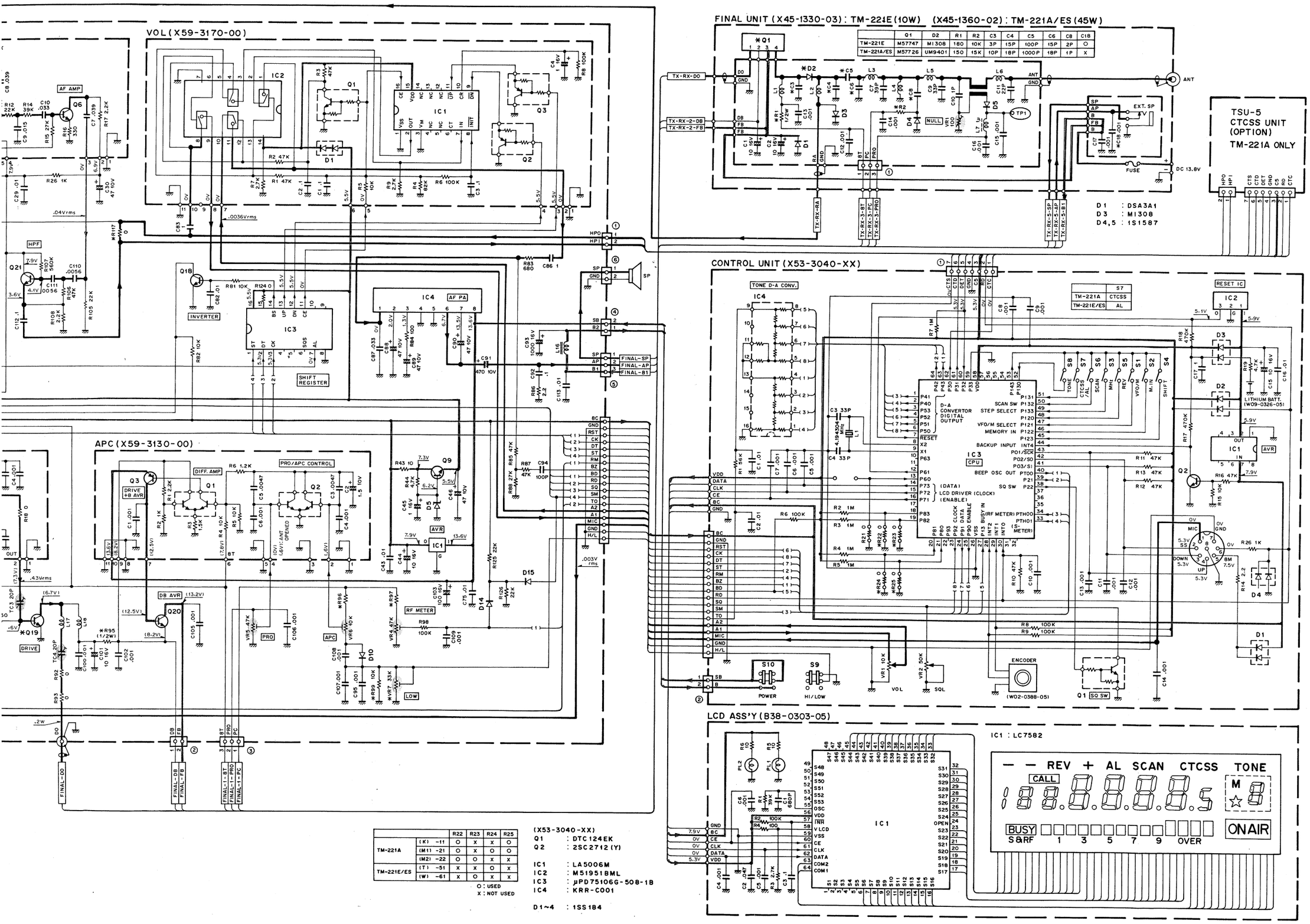

		R22	R23	R24	R25
TM-221A	(K) -11	O	X	X	O
	(M1) -21	O	X	O	O
	(M2) -22	O	O	X	X
TM-221E/ES	(T) -51	X	X	O	X
	(W) -61	X	O	X	X

O : USED
X : NOT USED

TM-221A/E/ES

LEVEL DIAGRAM

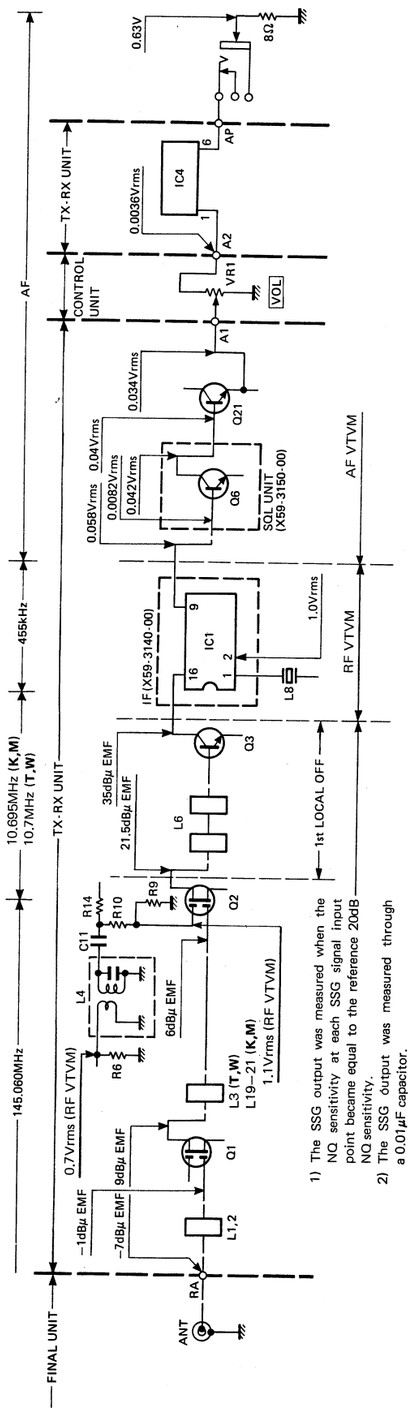

1) The SSG output was measured when the NQ sensitivity at each SSG signal input point became equal to the reference 20dB NQ sensitivity.
2) The SSG output was measured through a 0.01μF capacitor.

RX SECTION

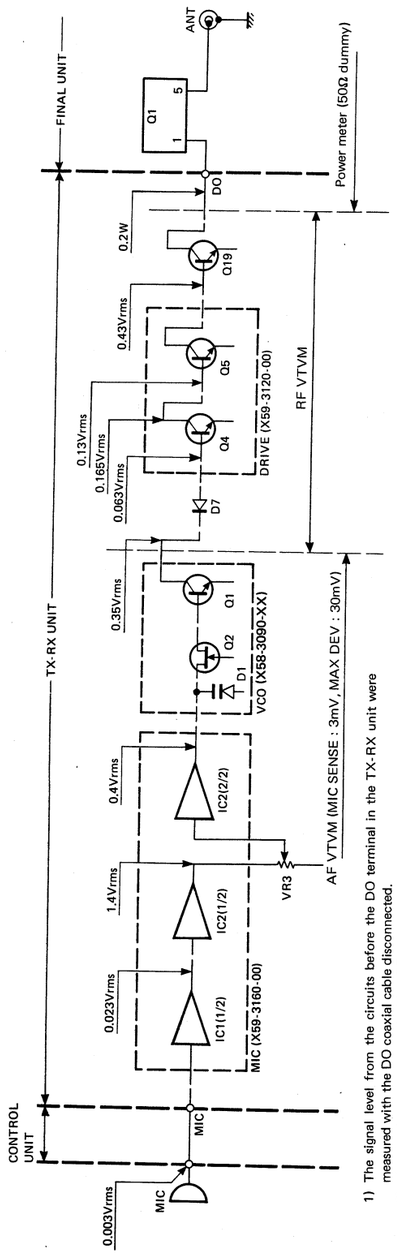

1) The signal level from the circuits before the DO terminal in the TX-RX unit were measured with the DO coaxial cable disconnected.
2) The circuits were measured with a RF prove.
3) FREQ. : 145.060MHz.

TX SECTION

BLOCK DIAGRAM

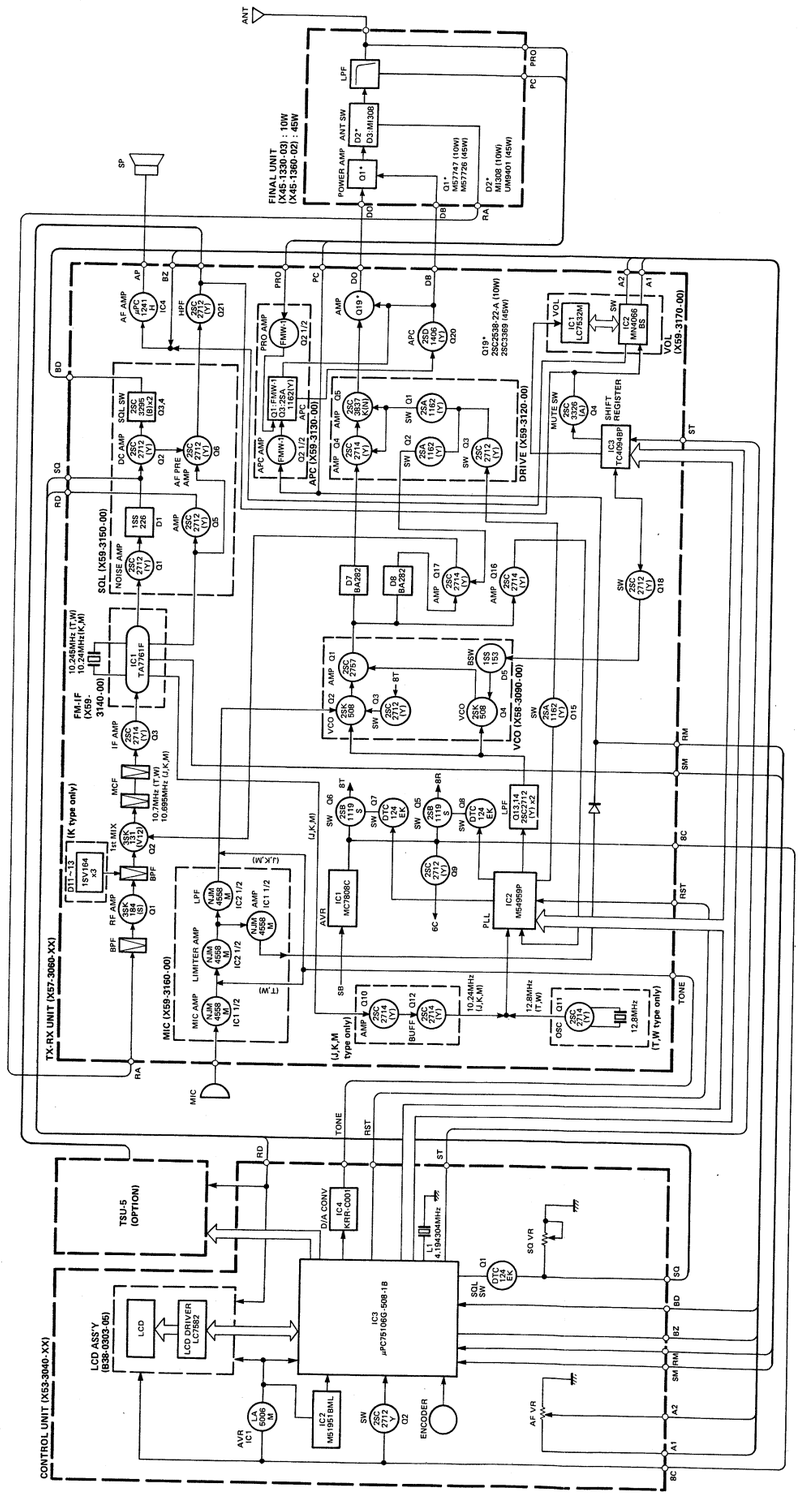

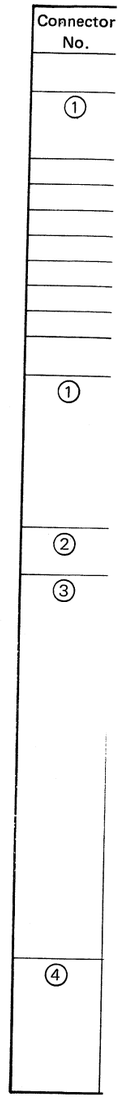

 TM-221A/E/ES

TERMINAL FUNCTIONS

Connector No.	Terminal No.	Terminal Name	Terminal Function
FINAL UNIT (X45-1330-03) : TM-221E (X45-1360-02) : TM-221A/ES			
①	1	8T	TX + 8T
	2	PC	Auto power control
	3	PRO	Protection
		RA	RX ANT
		DO	Drive output
		AP	Audio power
		B	+ B
		SP	Speaker
		FB	Final + B
		DB	Drive +B
CONTROL UNIT (X53-3040-XX)			
①	1	CTC	CTCSS IC clock
	2	RD	Remote data
	3	5C	+ 5V
	4	GND	GND
	5	DET	Tone detector output
	6	CTD	CTCSS IC data
	7	CTS	CTCSS shift register reset
②	1	SB	Switched + B (13.8V)
	2	B	+ B2
③		8C	+ 8V
		GND	GND
		RS	PLL enable
		CK	PLL & shift register clock
		DT	PLL & shift register data
		ST	Shift register strobe
		RM	RF meter
		BZ	Beep output
		BD	Busy display
		RD	Remote data
		SQ	Squelch
		SM	S meter
		TO	Tone output
		A2	AF output
		A1	AF input
		MIC	Mic AF input
		GND	GND
		H/L	Hi/low switch
④		VDD	Backup voltage
		DATA	LCD driver data
		CLK	LCD driver clock
		CE	LCD driver enable
		8C	+ 8V
		GND	GND

Connector No.	Terminal No.	Terminal Name	Terminal Function
TX-RX UNIT (X57-3060-XX)			
①	1	HPO	
	2	HPI	
②	1	DB	Drive +B
	2	FB	Final +B
③	1	PC	Auto power control
	2	PRO	Protection
	3	8T	TX + 8V
④	1	B2	+ B2
	2	SB	Switched + B (13.8V)
⑤	1	SP	Speaker
	2	AP	Audio power
	3	B1	+ B1
⑥	1	SP	Speaker
	2	GND	GND
⑦		8C	+ 8V
		GND	GND
		RST	PLL enable
		CK	PLL & shift register clock
		DT	PLL & shift register data
		ST	Shift register strobe
		RM	RF meter
		BZ	Beep output
		BD	Busy display
⑧		RD	Remote data
		SQ	Squelch
		SM	S meter
		TO	Tone output
		A2	AF output
		A1	AF input
		MIC	Mic AF input
		GND	GND
		H/L	Hi/low switch
		RA	RX ANT
		DO	Drive output

TSU-5 (CTCSS UNIT)

TSU-5 PARTS LIST

Parts No.	New Parts	Description				Ref. No.
TSU-5						
E31-3248-05	*	Lead with connector				
N87-2606-46		Brazier head taptite screw x 2				
X52-3060-00	*	CTCSS unit				
CTCSS UNIT (X52-3060-00)						
CC41FCH1H150J		Chip C	15pF	J		C6,7
CC73FSL1H681J		Chip C	680pF	J		C15
CE04CW1A100M		Electro	10μF		10WV	C1
CE04CW1A101M		Electro	100μF		10WV	C2
CE04CW1A220M		Electro	22μF		10WV	C5
CK73EF1C104Z		Chip C	0.1μF		Z	C3,4
CK73EF1C105Z		Chip C	1μF		Z	C17,19
CK73FB1H103K		Chip C	0.01μF		K	C16,18
CK73FB1H222K		Chip C	2200pF		K	C13,14
CK73FB1H272K		Chip C	2700pF		K	C12
C93-0501-05	*	Chip C	680pF			C8—11
E31-3248-05	*	Lead with connector				—
E40-5016-05		Pin ass'y	2P			J1
E40-5021-05		Pin ass'y	7P			J2
L77-1333-05		X'tal	4.194304MHz			L1
RD41FB2B103J		Chip R	10k	J	1/8W	R4,10,11
RD41FB2B104J		Chip R	100k	J	1/8W	R1
RD41FB2B105J		Chip R	1M	J	1/8W	R8,22,23
RD41FB2B122J		Chip R	1.2k	J	1/8W	R26
RD41FB2B124J		Chip R	120k	J	1/8W	R16
RD41FB2B153J		Chip R	15k	J	1/8W	R5
RD41FB2B154J		Chip R	150k	J	1/8W	R25
RD41FB2B183J		Chip R	18k	J	1/8W	R3
RD41FB2B222J		Chip R	2.2k	J	1/8W	R6
RD41FB2B273J		Chip R	27k	J	1/8W	R19
RD41FB2B392J		Chip R	3.9k	J	1/8W	R9
RD41FB2B473J		Chip R	47k	J	1/8W	R2,20,21,24
RD41FB2B683J		Chip R	68k	J	1/8W	R17
RD41FB2B823J		Chip R	82k	J	1/8W	R7
RD41FB2B824J		Chip R	820k	J	1/8W	R15,18
R92-0688-05	*	Chip R	470k			R14
R92-0689-05	*	Chip R	910k			R12,13
MN6520		IC				IC1
MN4094BS	*	IC				IC2
NJM4558M		IC				IC3
DTC114YK		Digital transistor				Q1,2
2SC2712(GR)		Chip transistor				Q3

TSU-5 PC BOARD VIEW

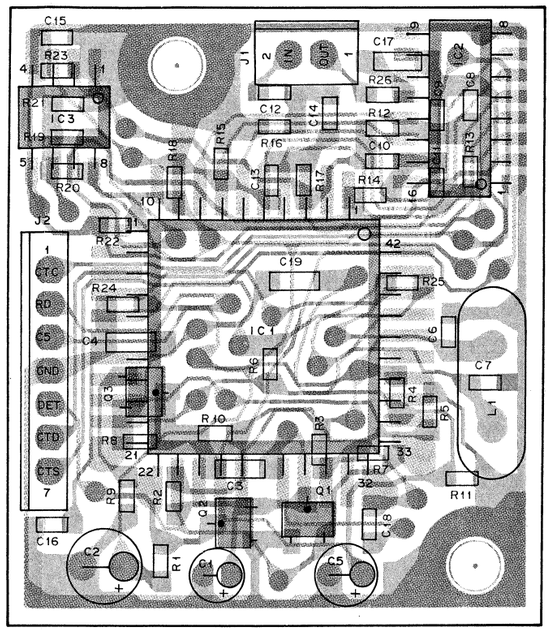

2SC2712

DTC114YK

TSU-5 (CTCSS UNIT)

TSU-5 SCHEMATIC DIAGRAM

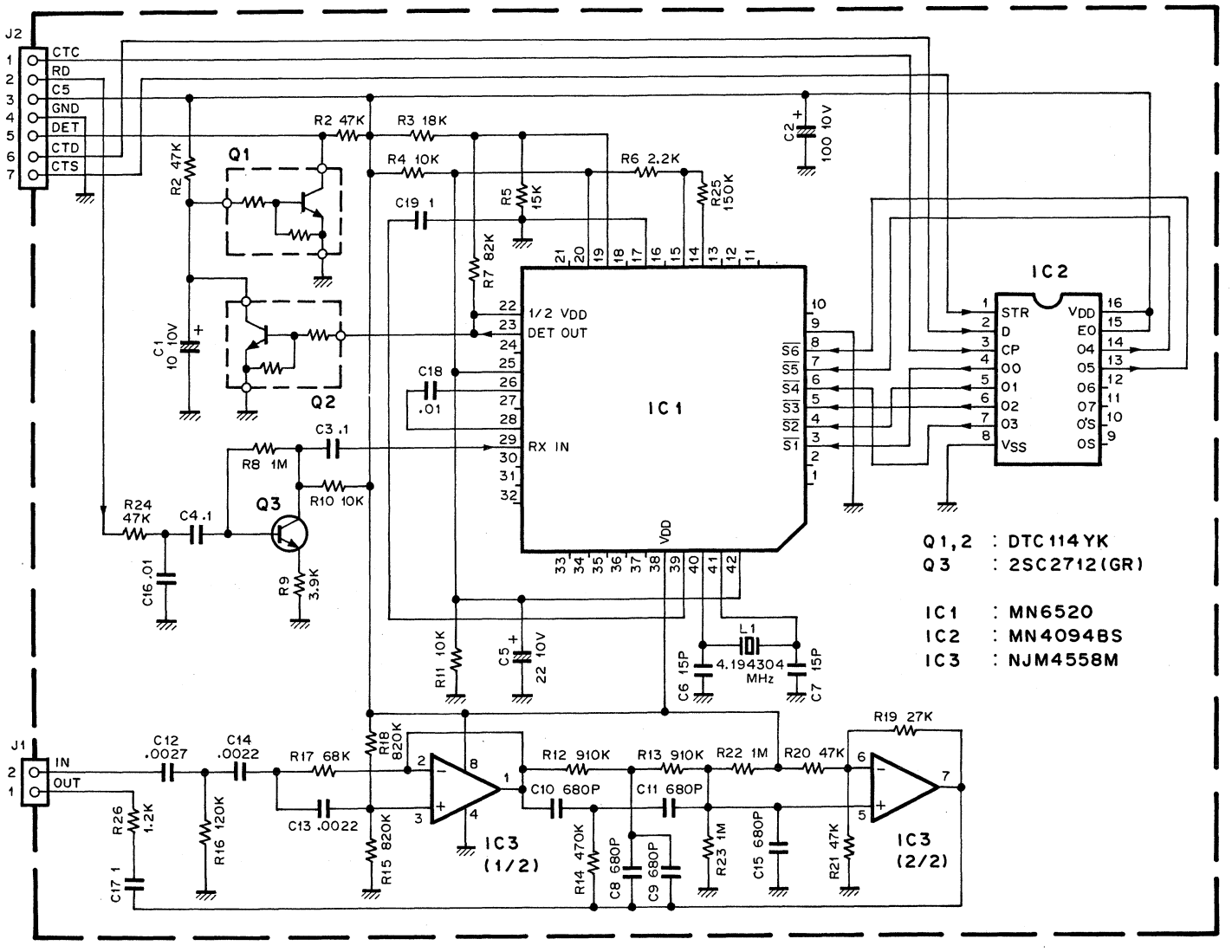

TM-221A/E/ES

SPECIFICATIONS

Specifications \ Model			TM-221A	TM-221ES	TM-221E
General	Frequency range		144 to 148MHz	144 to 146MHz	
	Mode		F3E (FM)		
	Antenna impedance		50 ohms		
	Operating temperature		−20°C to +60°C (−4°F to +140°F)		
	Power requirements		13.8V DC ± 15%		
	Ground		Negative		
	Current drain	Transmit mode (Max.)	9.5A		2.6A
		Receive mode with no input signal	0.4A		
	Frequency stability		Better than ± 10 x 10^{-6}		
	Dimensions (Projections included, W x H x D mm)		141 x 42 x 193		141 x 42 x 154
	Weight		1.2kg		1.0kg
Transmitter	Output power*	HI	45W		10W
		LOW	Approx. 5W Adjustable up to out 30W		Approx. 1W
	Modulation		Reactance modulation		
	Spurious radiation		Less than −60dB		
	Max. frequency deviation		±5kHz		
	Audio distortion (at 60% modulation)		Less than 3%		
	Microphone impedance		500 to 600 ohms		
Receiver	Circuitry		Double conversion superheterodyne		
	Intermediate frequency		10.695MHz/455kHz	10.7MHz/455kHz	
	Sensitivity (12dB SINAD)		Less than 0.16μV		
	Selectivity		−6dB : More than 12kHz, −60dB : Less than 26kHz		
	Spurious response		Better than 70dB		
	Squelch sensitivity		Less than 0.1μV		
	Output (5% distortion)		More than 2W across 8 ohms load		
	External speaker impedance		8 ohms		

Notes :

1. Circuit and ratings are subject to change without notice due to advancement in technology.
2. * : Recommended duty cycle :
   1 minute : Transmission
   3 minutes : Reception

KENWOOD CORPORATION

Shionogi Shibuya Building, 17-5, 2-chome Shibuya, Shibuya-ku, Tokyo 150, Japan

KENWOOD COMMUNICATIONS
Post Office Box 7065, Compton, California 90224, U.S.A.

KENWOOD COMMUNICATIONS
DIVISION OF KENWOOD ELECTRONICS, DEUTSCHLAND GMBH
Rembrücker Str. 15, 6056 Heusenstamm, West Germany

KENWOOD ELECTRONICS, BENELUX N.V.
Mechelsesteenweg 418 B-1930 Zaventem, Belgium

KENWOOD ELECTRONICS, AUSTRALIA PTY. LTD.
4E. Woodcock Place, Lane Cove, N.S.W. 2066, Australia