HF TRANSCEIVER/MULTI BANDER

TS-140S/680S

SERVICE MANUAL

KENWOOD

©1987-11 PRINTED IN JAPAN
B51-3337-00(O)1573

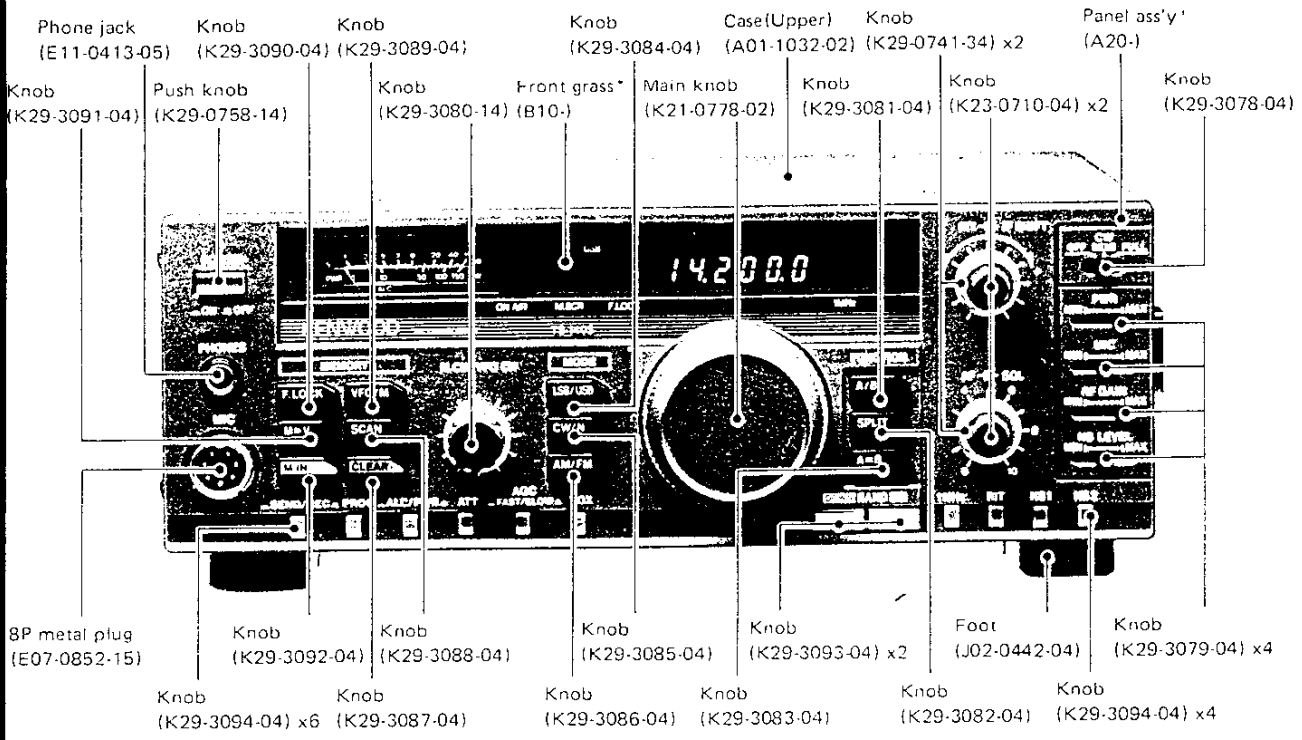

*Refer to parts list on page 42.

CONTENTS

CIRCUIT DESCRIPTION 2
SEMICONDUCTOR DATA 22
DESCRIPTION OF COMPONENTS 32
PARTS LIST 41
DISASSEMBLY 75
PACKING 79
LEVEL DIAGRAM 80
ADJUSTMENT 81
BLOCK DIAGRAM (TS-680S) 91
BLOCK DIAGRAM (TS-140S) 93
PC BOARD VIEWS/CIRCUIT DIAGRAM
CONTROL UNIT (X53-3100-XX) 95
SIDE TONE (X59-1060-00) 101, 110
VOX (X59-1080-00) 110
FM MIC AMP. (X59-3000-02) 101, 110
TRX (X59-3340-00) 101, 110
NB2 (X59-3350-00) 101, 110
DELAY TIME (X59-3360-00) 101, 110
SIGNAL UNIT (X57-3190-00) : TS-680S 102
TERMINAL FUNCTIONS 106
PC BOARD VIEWS/CIRCUIT DIAGRAM
SIGNAL UNIT (X57-3200-XX) : TS-140S 111
SWITCH UNIT (X41-3030-XX) 115
FINAL UNIT (X45-3100-XX) 116
FAN (X59-3370-00) 116
FILTER UNIT (X51-3040-XX) 117
DISPLAY UNIT (X54-3050-XX) 119
SCHEMATIC DIAGRAM (TS-140S) 121
SCHEMATIC DIAGRAM (TS-680S) 124
YK-455C-1 (CW FILTER) 127
TU-8 (TONE UNIT) 128
IF-10C (INTERFACE KIT) 132
SPECIFICATIONS 134

FOR SERVICE MANUALS
CONTACT:
MAURITRON TECHNICAL SERVICES
www.mauritron.co.uk
TEL: 01844 - 351694
FAX: 01844 - 352554

CIRCUIT DESCRIPTION

Note: This text is concerned primarily with the TS-140. those parts that pertain to the TS-680 will be marked with an asterisk (*).

GENERAL

The TS-140 is a transceiver incorporating a general coverage receiver section utilizing double conversion principles with a first intermediate frequency (IF) of 40.005 MHz and a second IF of 455kHz.

The TS-140 covers all amateur bands from 1.9MHz to 30MHz (*1.9 thru 50MHz). It contains a 10Hz step digital PLL circuit using single crystal frequency management and microprocessor control to provide high accuracy and stability.

The major functions are as follows:

- Receiving section: General coverage from 500kHz to 30 MHz (*500kHz to 30MHz, and 50 to 54MHz)
- Covers all amateur bands from 1.9 to 30MHz (*1.9 to 54 MHz)
- Full CW break-in
- 28MHz (*50MHz) band Preamplifier control
- Manual switching of AGC time constsnt
- Built-in variable threshold noise blanker
- Built-in woodpecker noise blanker (NB2)
- Frequency control function with a second sub-control
- Frequency configured using a single reference oscillator
- Range specified memory

FREQUENCY CONFIGURATION

The TS-140 operates using a double conversion syst for both transmit and receive (it operates using single c version in the FM transmit mode).

Figure 1 shows the frequency configuration of t transmit and receive systems. The receiver section will covered first.

Assume that the input frequency from the antenna fIN, the RX MIX1 local input is fVCO, and the RX MI local input is fHET. When the incoming signal is zero b the following relationships will hold true.

$$f_{IN} = f_{VCO} - f_{HET} - f_{CAR} \quad \cdots\cdots ①$$

for VCO4, $\frac{f_{VCO4}}{J} = \frac{f_{STD}}{8K}$ $\therefore f_{VCO4} = \frac{J}{8K} f_{STD}$ $\cdots\cdots ②$

for VCO3, $\frac{f_{VCO3}}{L} = \frac{f_{STD}}{8 \times 900}$ $\therefore f_{VCO3} = \frac{L}{7200} f_{STD}$ $\cdots\cdots ③$

for VCO2, $\frac{f_{VCO2}}{M} = \frac{f_{STD}}{8 \times 4500}$ $\therefore f_{VCO2} = \frac{M}{36000} f_{STD}$ $\cdots\cdots ④$

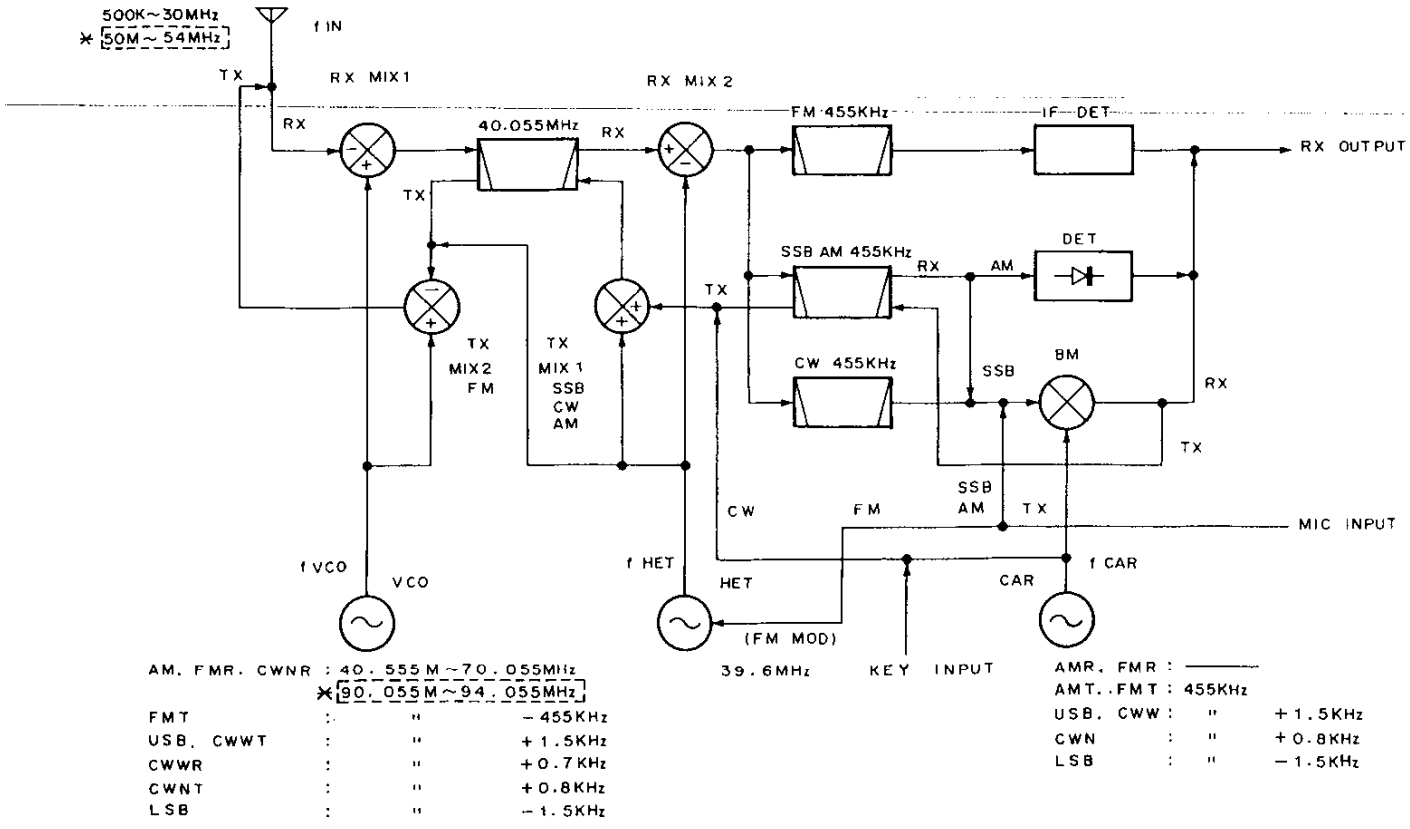

Fig. 1 Signal system frequency configuration

CIRCUIT DESCRIPTION

for VCO1, in the range of 500kHz to 30MHz

$$\frac{f_{VCO1}-\left(\frac{f_{VCO2}}{100}+\frac{f_{VCO3}}{200}+\frac{f_{STD}}{8}+f_{STD}-\frac{f_{STD}}{8}\right)}{N}=\frac{f_{STD}}{8\times 90}$$

$$\therefore f_{VCO1}=\left(\frac{N}{720}+\frac{M}{3600000}+\frac{L}{1440000}+1\right)f_{STD}\cdots\cdots⑤$$

Each local oscillator frequency may be summarized as follows:

$$f_{VCO}=f_{VCO1}\cdots\cdots⑥$$

$$f_{HET}=f_{VCO4}\cdots\cdots⑦$$

$$f_{CAR}=\frac{f_{VCO3}}{200}=\frac{L}{1440000}f_{STD}\cdots\cdots⑧$$

Therefore, f_{IN} in equation (1) is expressed as follows:
VCO1-A: 500kHz to 10.5MHz:

$$f_{IN}=\left(\frac{N}{720}+\frac{M}{3600000}-\frac{J}{8K}+1\right)f_{STD}\cdots\cdots⑨$$

Similarly, VCO1-B and VCO1-C are represented as follows:
VCO1-B: 10.5MHz to 21.5MHz:

$$f_{IN}=\left(\frac{N}{720}+\frac{M}{3600000}-\frac{J}{8K}+\frac{9}{8}\right)f_{STD}\cdots\cdots⑩$$

VCO1-C: 21.5MHz to 30MHz:

$$f_{IN}=\left(\frac{M}{3600000}-\frac{N}{720}-\frac{J}{8K}+\frac{17}{8}\right)f_{STD}\cdots\cdots⑪$$

*VCO1-D: 50MHz to 54MHz:

$$f_{IN}=\left(\frac{N}{720}+\frac{M}{3600000}-\frac{J}{8K}+\frac{17}{8}\right)f_{STD}\cdots\cdots⑫$$

As we have shown in equations (9) to (12) above the term fCAR can be eliminated, therefore the receive frequency is determined only by the reference fSTD and division ratios J to N (except L) (*J,K,M and N).

These equations may be further analyzed as follows:

(1) The division ratios are determined according to the desired operating frequency, by the microprocessor, and can be assumed to essentially contain no errors.
(2) Since each relationship is expressed using the fSTD linear equation, the reference frequency accuracy equals the operating frequency accuracy.
(3) The operating frequency remains unchanged even when the value of L changes.

When f_{IN} = 14MHz (USB) equation (10) is as follows:
J = 180, K = 1,584, L = 18,260, M = 55,000, N = 251
Therefore, f_{IN} = 1.25 fSTD.....⑬
When f_{IN} = 29.99999MHz (USB) equation (11) is as follows:
J = 180, K = 1,584, L = 18,260, M = 59,999, N = 149
Therefore, f_{IN} = 1.82 fSTD.....⑭
*When f_{IN} = 53.99999MHz (USB) equation (12) is as follows:
J = 180, K = 1,584, L = 18,260, M = 59,999, N = 330
Therefore, f_{IN} = 2.49 fSTD.....⑮

FOR SERVICE MANUALS
CONTACT:
MAURITRON TECHNICAL SERVICES
www.mauritron.co.uk
TEL: 01844 - 351694
FAX: 01844 - 352554

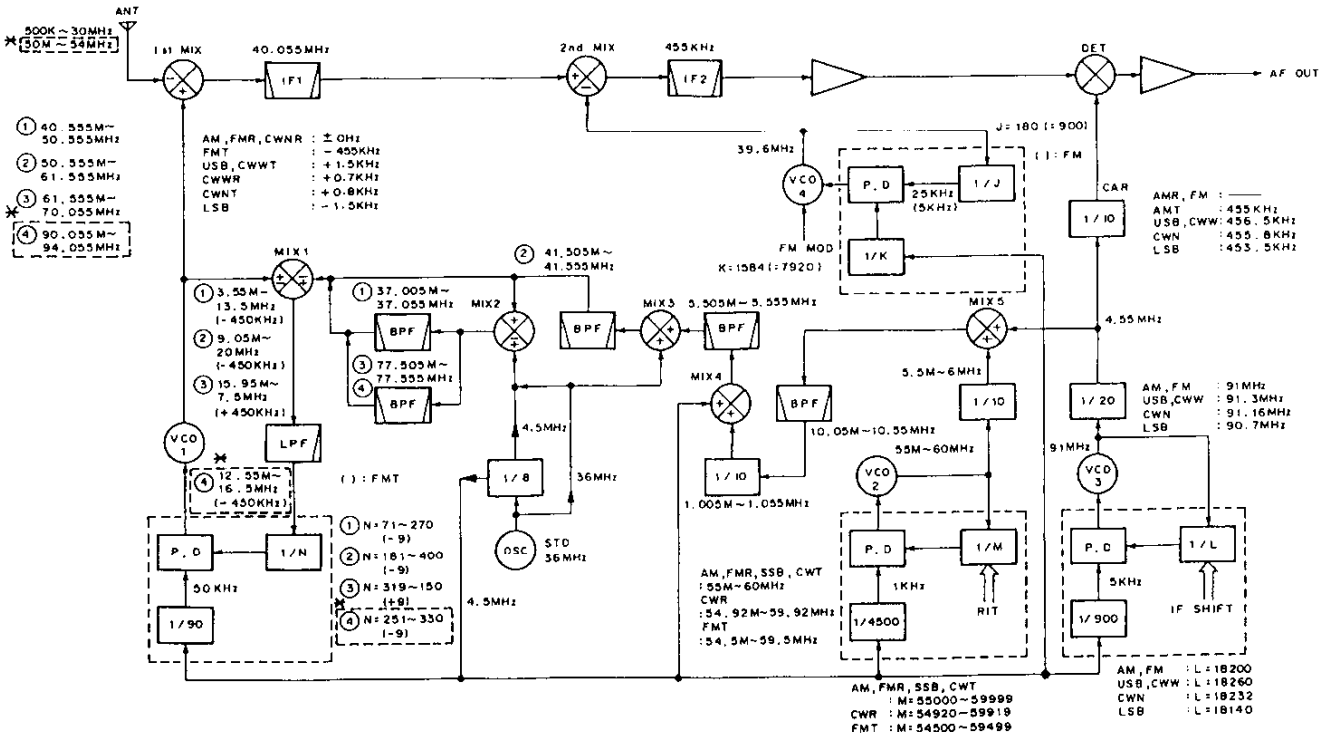

Fig. 2 PLL system frequency configuration

CIRCUIT DESCRIPTION

Since the accuracy of the reference crystal oscillator used in the TS-140 is 10PPM (−10 to +50 deg C), the overall accuracy is obtained by equations (9) to (12) according to characteristics (1) and (2). It is ±450Hz for 14MHz, and ±660Hz maximum for the frequency range of 500kHz to 30MHz. The accuracy of the transceiver is very stable.

*The total accuracy is ±900Hz at maximum for 50 to 54 MHz.

The variable band functions such as the IF shift are controlled by the microprocessor, by cotrolling the value of L, thus taking advantage of the characteristics (3). The carrier point setting and initial IF shift setting are adjusted by fine tuning of fCAR.

The receive frequency in SSB mode has been discussed already. In the other modes and during transmit operations the other modes and during transmit operations frequency is determined by the reference and division rations in the same manner as in the SSB mode in.

For CW receive the fVCO frequency is shifted down 800Hz at fVCO2.

For FM transmit the fVCO frequency is shifted down 455Hz at fVCO1 and fVCO2. The audio signal from the microphone is applied to VCO4, and fHET is directly modulated.

fCAR is stabilized by shift data During transmit and receive in the AM mode, and during receive in the FM mode.

The displayed frequency in each mode is listed in table 1.

Mode	Display frequency
USB, LSB	Carrier point frequency
CW	Transmit carrier frequency
AM, FM	IF filter center frequency

Table 1 Display frequencies in modes

Receive Circuit Configuration

The TS-140 receive system operates using double conversion with a first IF of 40.055MHz and a second IF of 455kHz.

The incoming signal from the ANT terminal passes through the filter unit LPF (Low Pass Filter) and transmit/receive switching relay, and is then applied to the RAT terminal of the signal unit. This signal passes through the 20dB attenuator circuit and an IF trap, and enters the 7 part HPF (High Pass Filter) (BPF for 1.6 to 2.5MHz). It combines with the LPF of the filter unit to give the required band rejection for each band.

*When the signal passes through the HPF, the preamplifier can be turned off or on via relays controlled by Q70 (2SK125-5) and Q71 (2SC1907) for 21.5 to 30 MHz or Q72 (2SK125-5) for 50 to 54MHz. When the preamplifier is turned on the signal is amplified approximately 10dB. For 50 to 54MHz the signal passes through buffer amplifier Q73 (2SC1907) for impedance matching regardless of the preamplifier state.

The signal passes through the IF trap again, and is combined with the VCO (Voltage Controlled Oscillator) in the first mixer, Q18 and Q19 (2SK125-5), to generate the first UF of 40.055MHz. The VCO circuit consits of Q9 thru Q11 (2SC2668Y), and generates 40.555 thru 70.055MHz by dividing it into three bands. The frequency is controlled by the DC signal (VCV) from the control unit.

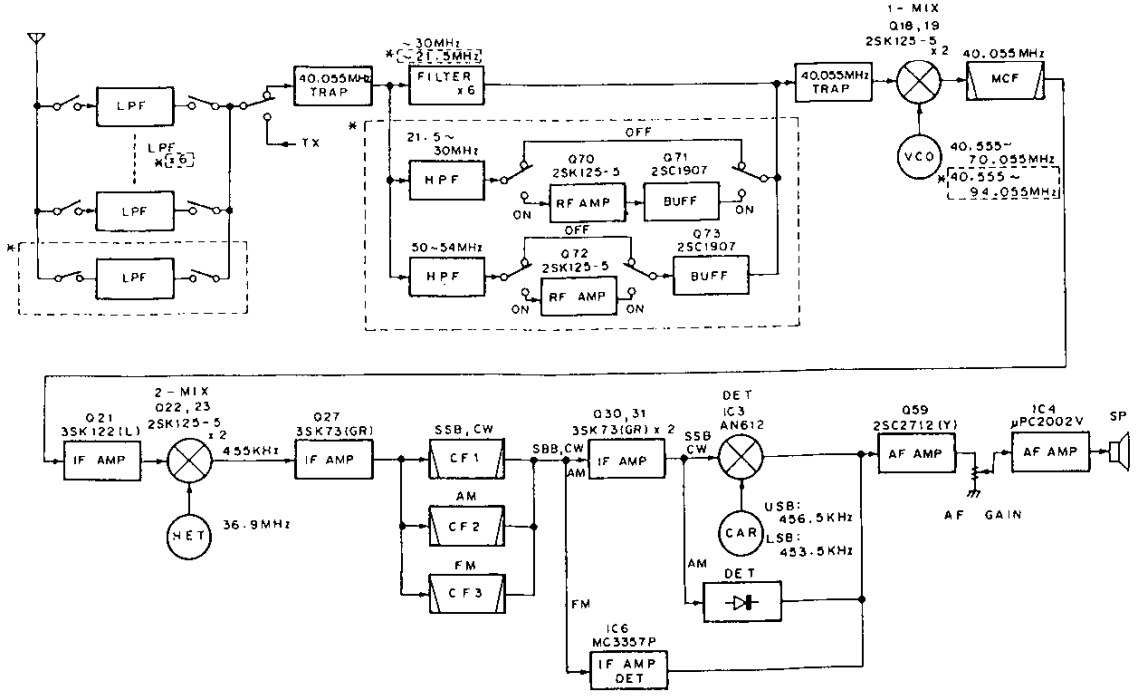

Fig. 3 Receive circuit configuration

CIRCUIT DESCRIPTION

*90.055 to 94.055MHz is generated by the VCO Q12 (2SK192A GR *J). Theerefore the circuit contains four VCO's.

The first IF signal of 40.055MHz passes through the two stage MCF (Monolithic Crystal Filter) that is used in both transmit and receive, and is then amplified by the first IF amplifier Q21 (3SK122L), mixed with the 39.6MHz heterodyne signal by the second mixer, Q22 and Q23 (2SK125-5), to generate the second IF of 455kHz. The heterodyne signal is generated by the control unit, then amplified for use by Q78 (2SK73GR). One portion of the 455kHz signal is applied to the noise blanker amplifier, and the other is amplified by Q27 (2SK73GR), passed through the mode specific ceramic filter (CF1 to CF3) or an optional filter to generate the necessary bandwidth, divided into appropriate mode, and fed into each amplifier circuit.

In modes other that FM, the signal is amplified by IF amplifier Q30 and Q31 (3SK73GR), detected by IC3 (AN612) for SSB and CW, and envelope detected by D75 for the AM mode.

In the FM mode the signal is trasmitted to IC6 (MC3357P) for limiting, amplification, and detection. This circuit is noise squelch cotrolled.

The AF signal in each mode after detection is selected by analog switch IC7 (TC4066BP), amplified by Q56 (2SC 2717Y), applied to the AF volume control, and amplified the final level by IC4 (μPC2002V).

Item	Rating
Nominal center frequency (fo) and declination	40.055MHz ± 0.75kHz or more
Pass bandwidth	fo ± 7.5kHz or more at 3dB
Attenuation bandwidth	fo ± 25kHz or more at 30dB fo ± 150kHz or more at 60dB Spurious is 30dB or more
Guaranteed attenuation	60dB or more at fo ± 150kHz ~ fo ± 1000kHz
Ripple	1.5dB or less
Insertion loss	4dB or less
I/O termination impedance	4.2kΩ

Table 2 MCF (L71-0275-05) (Signal unit XF1)

Item	Rating
Center frequency at 6dB	455kHz ± 0.20kHz
6dB bandwidth (total)	± 1.1 ~ ± 1.3kHz
60dB bandwidth	4.5kHz or less
Guaranteed attenuation (0.1 ~ 1MHz)	60dB or more
Spurious (600 ~ 700kHz)	40dB or more
Ripple at 6dB bandwidth	2dB or less
Insertion loss	2dB or less
I/O termination impedance	2kΩ

Table 3 Ceramic filter (L72-0356-05) (Signal unit CF1)

Item	Rating
Mominal center frequency (fo)	455kHz
6dB bandwidth	± 2kHz or less
40dB bandwidth	± 7.5kHz or less
Insertion loss	6dB or less
Guaranteed attenuation (Within fo ± 100Hz)	35dB or more
I/O termination impedance	2.0kΩ

Table 4 Ceramic filter (L72-0355-05) (Signal unit CF2)

Item	Rating
Nominal center frequency (fo)	455kHz ± 1kHz
6dB bandwidth (From 455kHz)	± 6kHz or more
50dB bandwidth (From 455kHz)	± 12.5kHz or less
Ripple (Within fo ± 4kHz)	3dB or less
Insertion loss	6dB or less
Guaranteed attenuation (Within fo ± 100kHz)	35dB or more
I/O termination impedance	2.0kΩ

Table 5 Ceramic filter (L72-0315-05) (Signal unit CF3)

Noise Blanker Circuit

NB1

NB1 is a noise blanker circuit which is designed for short duration noise interference such as might be encountered in an automobile. The 455kHz IF signal generated from the first IF of 40.055MHz by the second MIX is amplified by the noise amplifiers Q45, Q46, Q47 (2SC2712Y), buffered by Q48, and noise detected by D86. This signal switches Q51 (2SC2712Y), turns on Q28 (2SA1162Y) and Q29 (2SC2712Y), and switches the IF signal line according to variations in the incoming noise.

When NB1 turns on, a DC voltage is applied to the emitter of Q51 from the threshold cotrol, VR4. The effect of the noise blanker is cotrolled by varying this emitter voltage.

FOR SERVICE MANUALS
CONTACT:
MAURITRON TECHNICAL SERVICES
www.mauritron.co.uk
TEL: 01844 - 351694
FAX: 01844 - 352554

CIRCUIT DESCRIPTION

NB2

NB2 is a noise blanker circuit which blanks noises that have a relatively long duration, such as is generated by the so caslled "Russian Woodpecker". The noise signal is first amplified by noise amplifiers Q45 thru Q47, and then detected by D87, just as occurs with NB1. The threshold voltage on the emitter of Q50 (2SC2712Y) is also controled by VR4. Q50's output enters the NB2 module unit X59-3350-00 to synchronize pulse width and period signals with the woodpecker noise.

1/4,4/4 and 2/4,3/4 of IC1 (TC4011BF), are adjusted to a pulse width of 40ms.

Normally, woodpecker type noise has a pulse width of 3 to 4ms and a period of 80 to 100ms, but some woodpecker noise signals might have a period of approximately 50ms, although rare.

Therefore, even woodpecker noise with a large pulse width can be blanked by switching the noise at a 5ms rate. However, if noise with a period of several ms is encountered, such as ignition noise, and is blanked at this same interval, then the signal level will drop or become zero. To prevent this from occurring a one-shot multivibrator, composed of IC1 2/4,3/4, is utilized so that the next pulse does not occur until after a delay of 40ms, from the last output from IC1 1/4,4/4.

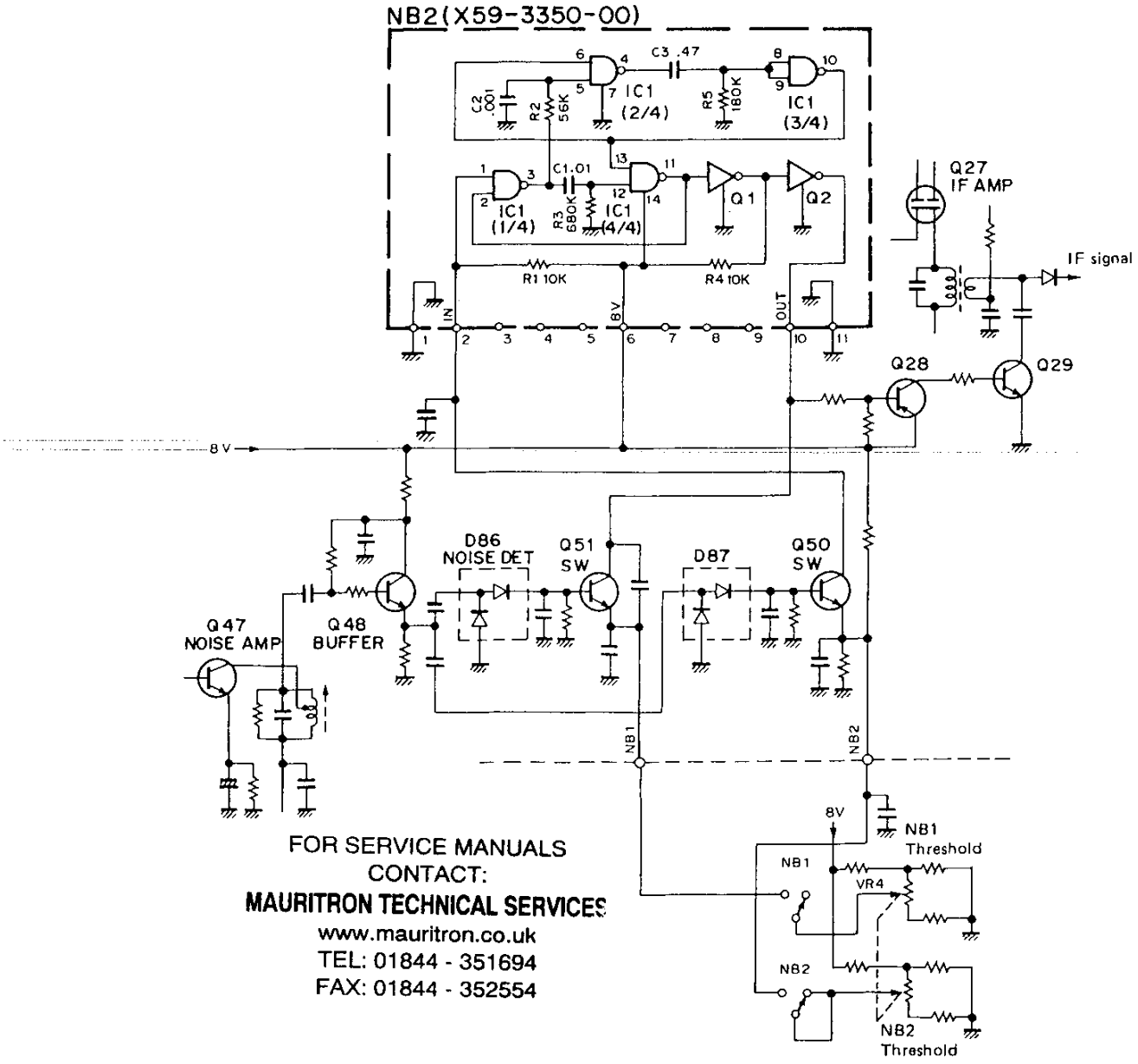

FOR SERVICE MANUALS
CONTACT:
MAURITRON TECHNICAL SERVICES
www.mauritron.co.uk
TEL: 01844 - 351694
FAX: 01844 - 352554

Fig. 4 Noise blanker circuit

CIRCUIT DESCRIPTION

Transmit Circuit Configuration

The transmit system operates utilizing double conversion for SSB, CW and AM and single conversion when operating in the FM mode.

The audio signal from the microphone terminal enters from the switch unit (CN5 "MIC"), and divides into a modulation and a VOX signal. The moduration signal is amplified by approximatery 20dB by IC1. Signals from data communications devices enter the ACC2 terminal on the rear panel of the radio and are applied to IC1. The output from IC1 is applied directly to the MIC GAIN cotrol on the front panel and to the FM modulation circuit.

The VOX signal is amplified by Q6 and enters the signal unit (CN501 "VOX"), and then enters the VOX module (X59-1080-00). The output from this module passes through the VOX switch and enters the DELAY TIME module (X59-3360-00) to cotrol the transmitter and receiver.

During SSB and AM operation the signal that passes through the microphone gain cotrol will enter the signal unit (CN1 "MV2"), where it is amplified by Q74 (2SC2712 Y) and applied to the balanced modulator IC3 (AN612). In the AM mode, however, the balance of IC3 is upset to generate the AM signal. Q74 does not operate in FM and CW modes because the voltage is applied to the emitter thru diode D89. The 455kHz DSB (Double Side Band) signal generated by IC3 passes through the transmit switching diodes D55 and D64, filter switching diodes D56, D57 (SSB), or D57, D60 (AM) to generate the 455kHz SSB or AM signal.

The SSB and AM signals pass through transmit switching diode D55, and are amplified by IF amplifier Q86. The carrier in CW mode optimizes the level past the PIN diode D74. The signal then passes through switching diodes D109, D110, and D122 and enters Q86 (3SK73GR).

Q86 is used to perform ALC (Automatic Level Control) and CW keying.

The 39.6MHz HET signal from the cotrol unit enters the signal unit (CN21 "HET") and is amplified by HET amplifier Q78 (3SK73GR). This HET signal passes through switching diode D100, in the SSB, CW and AM modes, and is fed into the first transmit mixer IC5.

The output from the IF amplifier also enters IC5 and is combined with the HET signal to generate a 40.055MHz signal.

The output from IC5 passes through a MCF, which removes spurious components and enters the second transmit mixer Q79 and Q80 (3SK122L).

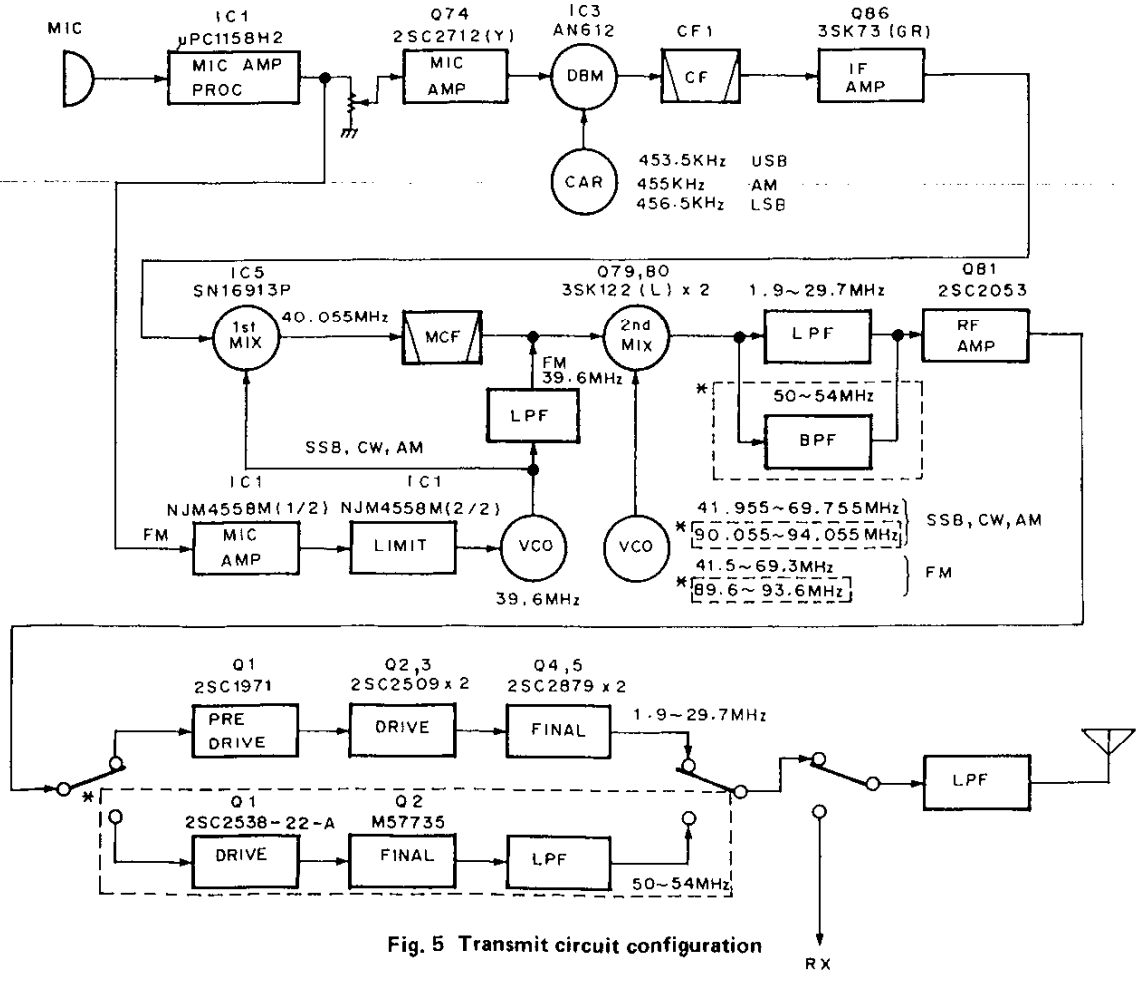

Fig. 5 Transmit circuit configuration

CIRCUIT DESCRIPTION

In FM the output of the MIC amplifier, IC1 of the switch unit, enters the signal unit FM MIC amplifier module (X59-3000-02). This module also functions as the MIC amplifier, limiter circuit, and low-pass filter circuit. The output enters the cotrol unit from the FMM terminal and modulates the 39.6MHz oscillator, VCO4. In modes other then FM, the power of the FM microphone amplifier module is not turned on, and therefore modulation is not affected.

The 39.6MHz signal from the control unit to the signal unit is the HET signal for SSB, AM, and CW modes and the first IF frequency in the FM mode. The IF frequency which enters the signal unit is amplified by IF amplifier Q78. Q78 is the ALC cotroller. The second gate of Q78 has a fixed bias in modes other then FM, therefore ALC does not fuction.

The output from Q78 (3SK73GR) passes through switching diodes D101, D102, and D124, a low-pass filter, and is delivered to the final mixer (the second mixer in modes other then FM). Since the IF frequency in the FM mode is different from that in the other modes, the frequency is corrected by the final VCO.

The signal is converted into an actual transmit frequency by the final mixer and passes through the IF trap (40.055 MHz) and low pass filter, is amplified by RF amplifier Q81, and passes through output transformer L111 to become the driver output.

The driver output from the signal unit now enters the final unit.

The output is amplified by final unit transistors Q1, Q2, Q3, Q4 and Q5 to generate a 100W final output. Then enters the filter unit.

The final unit output passes through the transmit/receive switching relay, K16, and individual low-pass filters for each band, and is then applied to the antenna terminal.

The ALC is detected by the output section of the low pass filter.

*The 50MHz band signal is separate from the HF band signal after it passes through the IF trap. This signal for the 50MHz band passes through switching diodes D104, and D106 and a band-pass filter. It is then amplified by RF amplifier Q81 (2SC2053), which is shared by the HF bands. Then the signal passes through the output transformer L11, enters the final unit, and is split from the HF path by relay K1. The signal is then applied to the filter unit. This signal is amplified to the required level by the drive amplifier (Q1) and power module Q2. It passes through the low pass filter, and is supplied to the antenna.

Standby Control Circuit

To switch between transmit and receive for full break-in, or for AMTOR/Packet use, the microprocessor sends various timing signals to control the transmit/receive circuits.

When the standby signal SS from the Standby switch is applied to the microprocessor, three signals are generated, CTX, RB, and CKY. Signals TXB, RXB, and RL are generated based upon these signals to operate the transmit/receive circuit.

The role of each of these signals is describe below:

SS: Reference signal to cotrol each signal (stadby switch, PTT switch, and key input)
CTX: Cotrol signal from the microprocessor to generate TXB
RB: Control signal to mute the receive signal line
CKY: Control signal for keying
TXB: 8V line for the transmit circuits
RXB: 8V line for the receive circuits
RL: 13.8V line for the transmit circuits
CKB: 8V line for keying generated by CKY

The signal timings are shown in the figure 6.

The timing after the standby switch is switched to transmit and until the system return to the receive state is as follows:

1. When SS goes low, the microprocessor judges whether the frequency is trasmittable or not. If so, the microprocessor switches CTX high 10ms after SS goes low.
2. Module unit (X59-3340-00) receive the CTX signal, and causes TXB and RL to go high.
3. CKY goes high 2ms after TXB goes high, CKB is driven to generate the keying voltage.
4. The transmit signal is emitted approximately 7ms after the CKB is actuated.
5. To return to receive, the transmit signal stops approximately 7ms after the SS line goes high, and TXB and RL return low, as RXB goes high.
6. The RB voltage used for turning on the receive signal line goes high 12ms after RXB goes high, and a signal is received.

FOR SERVICE MANUALS
CONTACT:
MAURITRON TECHNICAL SERVICES
www.mauritron.co.uk
TEL: 01844 - 351694
FAX: 01844 - 352554

CIRCUIT DESCRIPTION

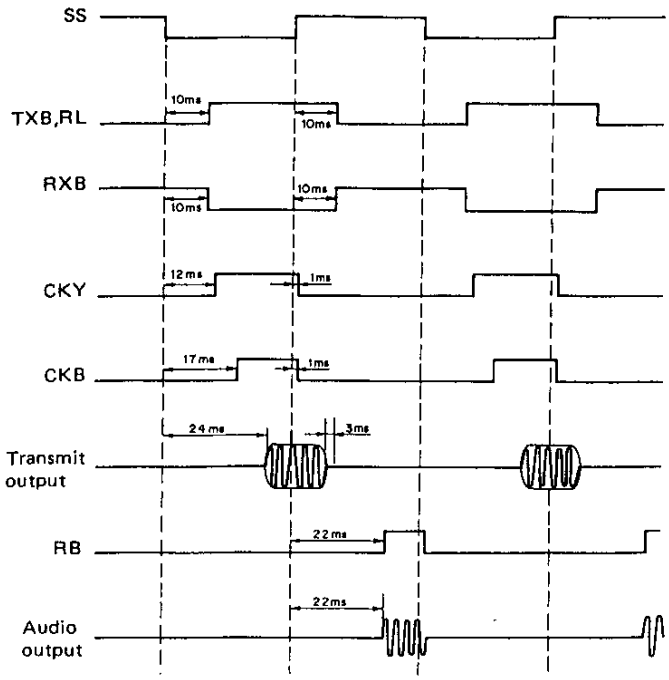

Fig. 6 Transmit/Receive timing chart

Break-in Operation

Manual keying

When the standby switch is turned ON, the base of Q90 (2SA1162Y) goes low, and Q91 (DTC114EK) turns on. CSS goes low, and CTX from the microprocessor turns on Q4 (DTC114EK) of the module unit (X59-3340-00). RL is emitted from Q1 (2SA1204Y), and TXB is applied from Q2 (2SA1204Y). Microprocessor output CKY turns on Q5 (DTC114EK) of the module unit (X59-3360-00), causing the emitter of Q7 (DTC114TK) to go to ground. One end of the Q7 collector is connected to Q87 (2SA1162Y) of the signal unit (X57-3190-00), and the other is connected to the key jack from Q84 (DTC114EK) from the COM terminal via the break-in changeover switch.

Q87 (2SA1162Y) is turned on and produce the CKB voltage when the key is closed, and Q86 (3SK73GR) of the send IF amplifier is keyed.

Semi-Break-In Keying

CW8 is applied to the base of Q84 and Q99. Therefore, they are ready to turn on when the emitter is connected to ground.

When the key is closed, the SEM terminal of the module unit (X59-3360-00) is connected to ground through Q99 and Q84 keys.

Q6 and Q2 in the module unit turn on, and trigger one-shot multivibrator IC1 (MB74LS122). A pulse is output from pin 8 to turn Q1 on and connect the SS line to ground.

When the key is closed, the IC8 output pulse returns to a low level and the SS line goes high after a time constant determined by setting of the VOX delay control VR7 and C254.

The key line switches Q87 via the COM terminal at this same time, and keys Q86 in real time.

Full Break-In

The key cunnects to the SS line and has the same function as the standby switch. When the key is closed, Q84 turns on, the base of Q90 is connected to the ground, Q91 is turned on, and CSS is switched low. The TXB and RL voltages are generated by the CTX signal, and the CKB voltage is used to generate the CKY signal voltage just as in manual keying.

Full break-in is different from manual keying in that the base of Q87 is controlled directly by the key in manual keying. In full break-in Q87 is controlled via Q5 and Q7 of the module unit (X59-3360-00) by the CKY signal from the microprocessor by turning the SS line on and off.

The reason is that in full break-in, the timing the transmit signal is set so that the radio signal is transmitted after the control signal is completely switched and the transmit system become stable; control is passed to receive after the signal stops, a receive signal is output, and the receive system becomes stable.

CIRCUIT DESCRIPTION

FOR SERVICE MANUALS
CONTACT:
MAURITRON TECHNICAL SERVICES
www.mauritron.co.uk
TEL: 01844 - 351694
FAX: 01844 - 352554

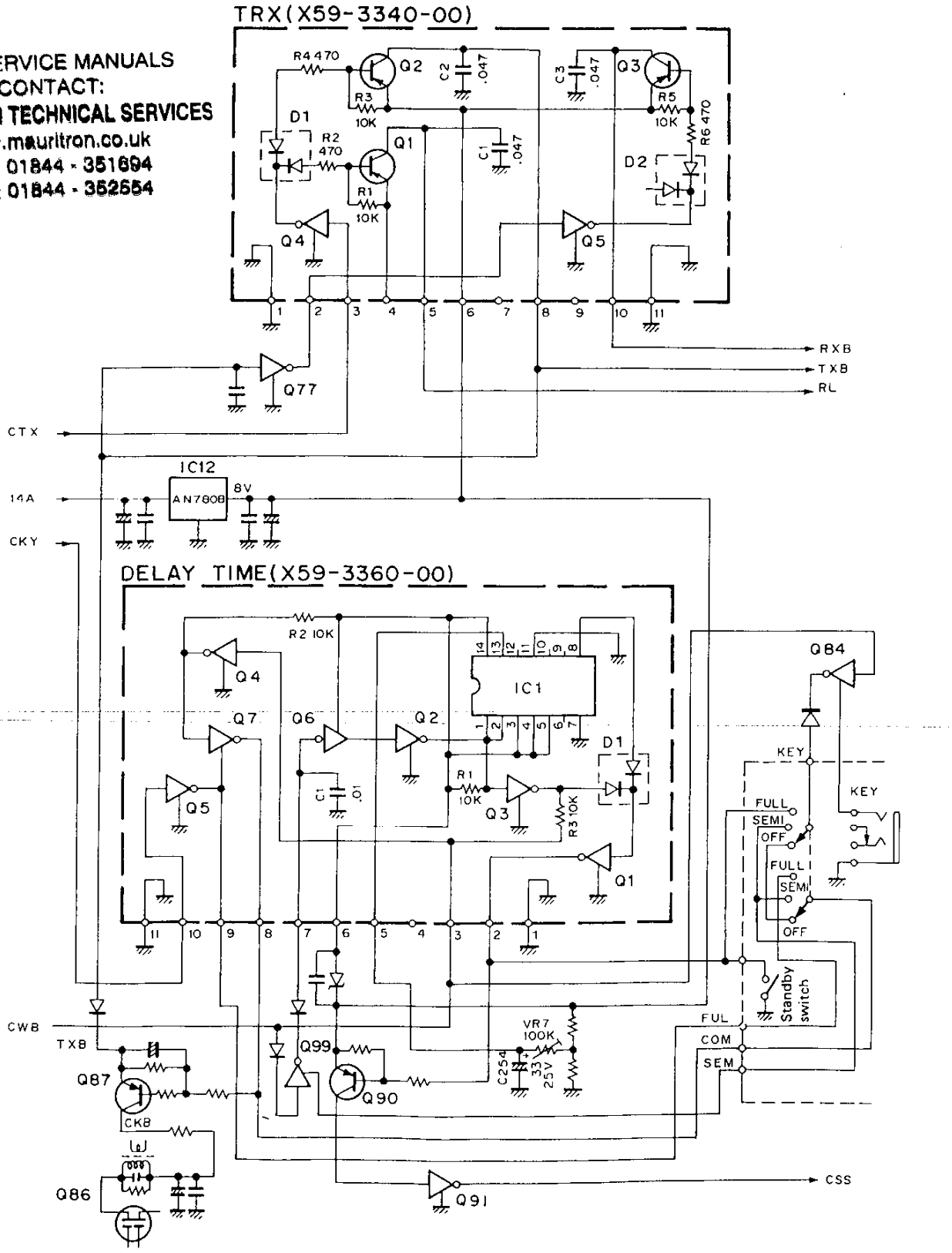

Fig. 7 Standby control circuit

CIRCUIT DESCRIPTION

ALC Circuit

A new ALC circuit is used to control the output according to the selected mode.

The output in the HF band is 100W for the CW mode, 110W for the SSB mode, and 50W for FM. therefore, the ALC detection voltage id defferent for each mode. CW is used and the standard reference mode. The gain of IC11 (3/4), in the ALC circuit, is varied according to the mode and transmit power. For example, since the output in FM is 50W the gain of IC11(3/4) must be increased by 3dB, with respect to the CW reference, to correct any deficiencies in the feedback voltage.

*Since the 50MHz band has only 10 watts output the gain of IC11(3/4) is increased by 10dB.

IC11(1/4) cotrols the ALC and power. IC11(1/4) functions as a differential amplifier in which the signal from IC11(3/4) enters the negative terminal and the power control voltage enters the positive terminal. As the transmitter output increases, the voltage at the negative terminal increases, and the output from IC11(1/4) decreases. When this output falls below the ALC reference of 2.5V, ALC action will begin.

The power is cotrolled by changing the voltage at the positive terminal of IC11(1/4). For the AM and CW modes the power is fixed at its maximum full power state since the center of VR2 (PC2) is held open.

The power cotrol voltage (PCV) changes with power, voltage and temperature. When the power, or voltage rises, the PCV is limited by zener diode D116 to avoid excessive power output. When the voltage falls, the power is increased. As the temperature rises, the resistance of thermister TH4 decreases, and the PCV rises, but excessive power output is prevented by the (negative) temperature coefficient of the zener diode. When the temperature falls, the PCV is reduced by the thermister, and power is reduced.

The drive level is also controlled in the FM mode. The input to IF amplifier Q78 (HET amplifier in modes other then FM) is controlled by PIN diode D96. The capacitor connected in parallel is provided to gain the minimum drive level at the maximum power.

VSWR Protection Circuit

To determine a time constant for the reflected wave, the reflected wave voltage is amplified by IC11(2/4) and applied to IC11(3/4) to provide protection.

Temperature Protection Circuit

The temperature detection circuit of the final unit is made modular to reduce its size. The surface temperature of the radiator is as follows:

Cooling fan start ..... 50 deg C
Cooling fan stop..... 45 deg C
Temperature protection start..... 80 deg C
Temperature protection stop ..... 70 deg C

When the temperature protection operates the ALC voltage and the power fall. The system does not return to the receive state.

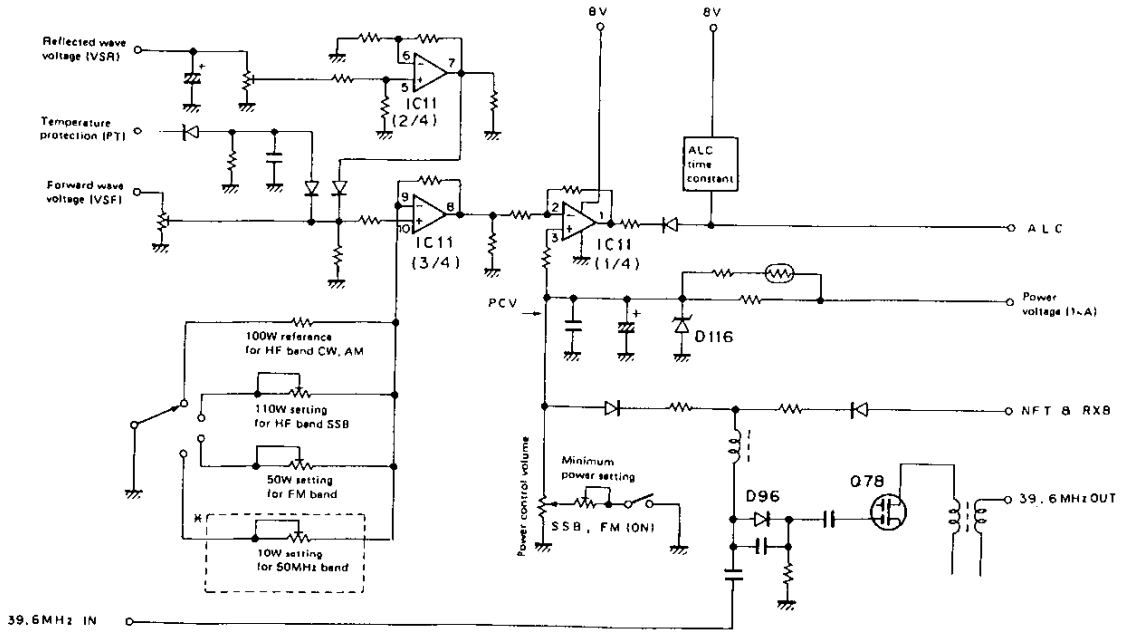

Fig. 8 ALC and power control circuit

CIRCUIT DESCRIPTION

Speech Processor Circuit

The SWITCH UNIT (A/4) IC1 is an audio type speech processor which also function as the first stage microphone amplifier. When the processor switch is OFF, the switch unit operates as a 20dB microphone amplifier. When the processor switch is ON, it operates as an ALC cotrolled amplifier with ALC with a maximum gain of 40dB.

The compression is set to approximately 20dB when the input signal to the MIC terminal is 10mV.

When the processor switch is ON, 8V DC is applie the base of the gain adjustment switching transistor Simultaneously the feedback amplifier begins operating.

When the switch unit is put on stand-by remotely data from terminal units connected to accessory term number 2 (such as packet, and AMTOR) Q2, Q3, and are turned ON, the microphone circuit is muted, the terminal is switched low, thus stabalizing the transmissio

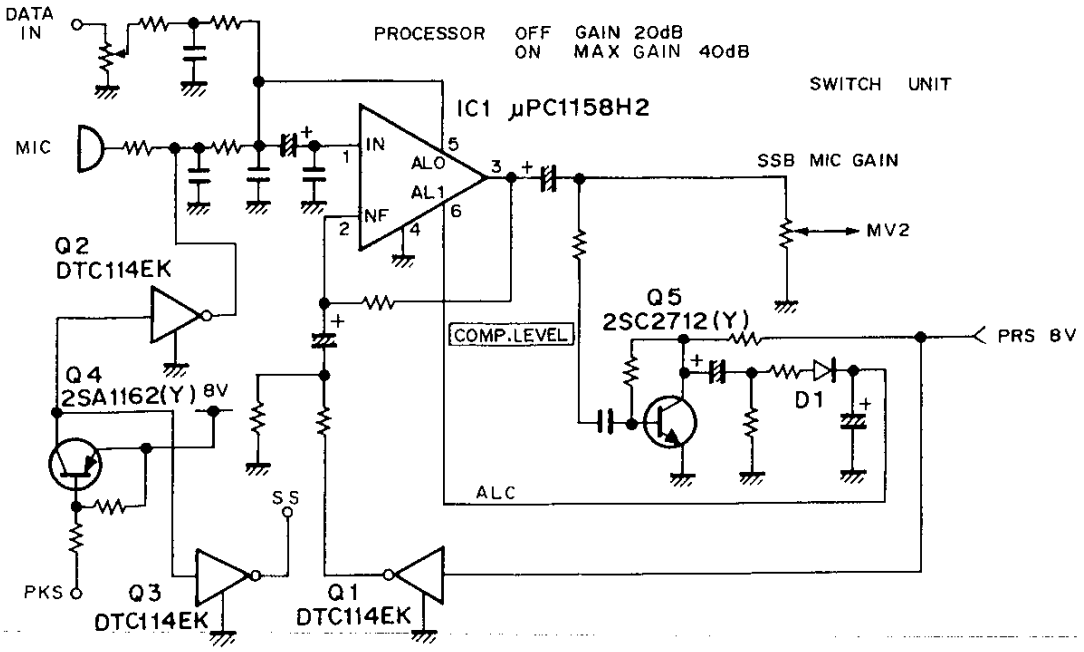

Fig. 9 Speech processor circuit

PLL Circuit

The TS-140 PLL circuit consists of three PLL loops which cover 500kHz to 30MHz in 10Hz steps with a reference frequency of 36MHz.

*The PLL circuit consists of four PLL loops, including 50MHz to 54MHz.

The carrier frequency is inserted into the PLL loop to provide the IF shift function. The carrier circuit PLL loop and the HET circuit PLL loop that aiways generates a 39.6 MHz frequency are also included. Division ratio data to these PLL loops cotrolled by the microprocessor. A single crystal frequency management method, in which phases are compared with that of a reference frequency fSTD, is used for this transceiver.

The block diagram of the PLL circuit is provided in figure 10.

The reference frequency fSTD, which is used as a basis for TS-140 frequency cotrol, is generated by a 36MHz crystal and oscillator Q9 (2SC2787L). The fSTD passes through buffers Q10 and Q12 (2SC2668Y), enters IC10 (SN16913P), passes through a LPF, and enters IC11 (SN16913P). This signal passes through buffer Q11 (2SC2668Y), and is divided by 8 in IC8 (M74LS93P) to generate a 4.5MHz signal. This signal passes through a LPF, and enters IC9 and IC11 (SN16913P) in the main loop. The signal passes through a LPF, and become the 4.5MHz reference frequency, fR, for each PLL circuit.

FOR SERVICE MANUALS
CONTACT:
MAURITRON TECHNICAL SERVICES
www.mauritron.co.uk
TEL: 01844 - 351694
FAX: 01844 - 352554

CIRCUIT DESCRIPTION

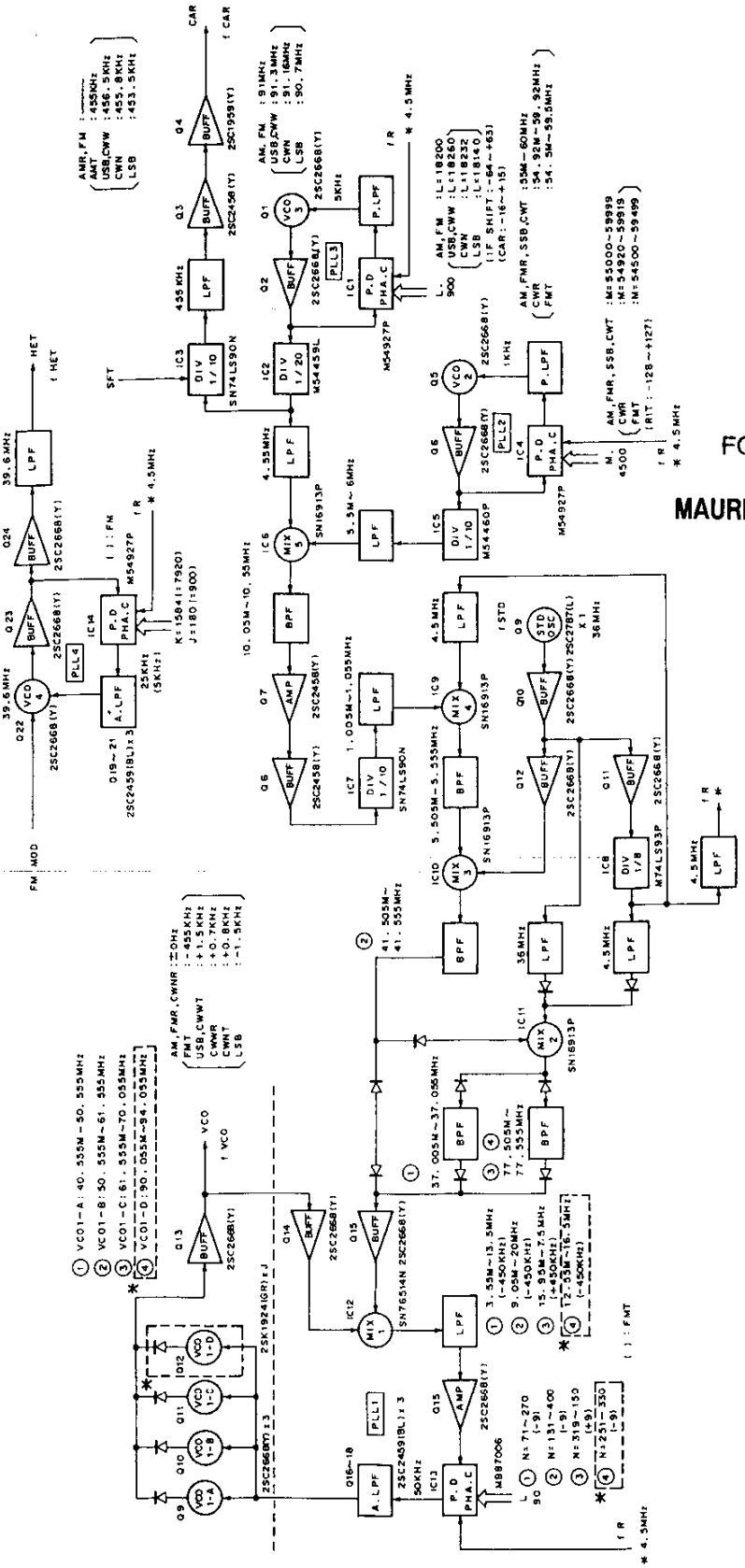

Fig. 10 PLL block diagram

FOR SERVICE MANUALS
CONTACT:
MAURITRON TECHNICAL SERVICES
www.mauritron.co.uk
TEL: 01844 - 351694
FAX: 01844 - 352554

CIRCUIT DESCRIPTION

PLL4

PLL4 consists of IC14 (M54927P), and VCO4, Q22 (2SC2668Y), is locked at 39.6MHz. The 4.5MHz reference frequency, fR, is applied to IC14 pin 15, and is divided internally by 180 (900 for FM) to generate a comparison frequency of 25kHz (5kHz for FM). The from VCO4 output passes through buffer Q23(2SC2668Y), applied to IC14 pin 3, and divided internally by 1584 (7920 for FM). The resulting signal is compared with the 25kHz (5kHz for FM) reference signal by the phase comparator, thus locking VCO4. Division ratios K and J are transmitted from digital control circuit via DA, CK, and PR4.

The output from PLL4 passes through Q24 (2SC2668Y) and a LPF and is fed into the signal unit as the HET signal.

PLL3

PLL3 consists of IC1 (M54927P), and VCO3, Q1 (2SC 2668Y), is locked at about 91MHz with a frequency that varies with the mode.

The 4.5MHz reference frequency, fR, is applied to IC1 pin 15, and divided internally by 900 to generate a 5kHz comparison frequency. The output from VCO3 passes through buffer Q2 (2SC2668Y), is applied to IC1 pin 3, and multiplied internally by the division ratio (about 1/18200) determined according to the mode. The resulting signal is compared with the 5kHz reference signal by the phase comparator, thus locking VCO3. Division ratio L is transmitted from the digital control circuit via DA, CK, and PR3.

The PLL3 output is divided by 20 in IC2 (M54459L), and directed to two circuits. One signal enters IC3 (SN74 LS90N) of the carrier circuit, is divided by 10, passes through a LPF, buffers, Q3 (2SC2458Y) and Q4 (2SC 1959Y) and fed into the signal unit as a carrier signal. During AM reception and AM/FM transmission, IC3 operation is stopped by the SFT data signal to remove the carrier signal.

The other signal is divided by 20, passes through a LPF, and enters MIX5 IC6 (SN16913P) in the main loop, which is part of the digital VFO. Therefore, the operating frequency remains unchanged even if the carrier frequency is changed to implement features, such as USB/LSB mode switching, IF shift, and fine adjustment of the carrier point. IF shift allows a shft of ±1kHz or more during SSB and CW receive The carrier point can be finely adjusted, in the SSB mode, thru a range of −400Hz to +375Hz.

PLL2

PLL2 consists of IC4 (M54927P), and VCO2, Q5(2SC 2668Y), is locked thru a range of 55MHz to 59.999MHz, except in CW receive and FM transmit. The 4.5MHz reference frequency, fR, is applied to IC4 pin 15, and divided internally by 4500 to generate a 1kHz comparison frequency. The from VCO2 output passes through buffer Q6 (2SC2688Y), is applied to IC4 pin 3, and divided internally by M. The resulting signal is compared with the 1kHz reference signal, by the phase comparator, thus locking VCO2. Division ratio, M, is transmitted from the digital control circuit as division data in 4,999 steps (55,000 to 59,999) corresponding to the range of 0.00kHz to 49.99kHz or 50.00 kHz to 99.99kHz via DA, CK,, and PR2.

Correction is performed according to the mode and RIT operation. To obtain the 800Hz beat tone obtained during CW reception, M is shifted (54,920 to 59,919) by about 80. Since the VCO1 output frequency during FM transmit is 455kHz lower than thatduring receive, it is corrected 5kHz (54,500 to 59,499) by VCO2. (450kHz is corrected by PLL1.) When the RIT is operating, the M division ratio is varied so that the from VCO1 output frequency is shifted ±1.2kHz or more.

In AM and FM modes, the frequency is shifted 10 steps, and operates in 100Hz steps as shown in the frequency display.

The PLL2 output is divided by 10 in IC5 (M54460L), passes through a LPF, and is applied to pin 2 of MIX5 IC6 (SN16913P). The signal is mixed with the signal generated by PLL3, passes through a BPF, and become a signal of 10.05MHz to 10.5499MHz, in 100Hz steps. The signal passesthrough amplifier Q7 (2SC2458Y), buffer Q8 (2SC 2458Y), is divided by 10 in IC7 (SN74LS90N), passes thru a LPF, and is applied to pin 2 of MIX5 IC9 (SN16913P). The signal is mixed with the 4.5MHz signal generated by dividing the reference frequency by 8 in MIX4 (SN16913P), passes through a BPF, become a signal of 5.505MHz to 5.55499MHz in 10Hz steps, and is applied to pin 2 of MIX3 IC10 (SN16913P). In addition, the signal is mixed with the 36MHz reference frequency by MIX3, passes through a BPF, and become a signal of 41.505MHz to 41.50499MHz.

FOR SERVICE MANUALS
CONTACT:
MAURITRON TECHNICAL SERVICES
www.mauritron.co.uk
TEL: 01844 - 351694
FAX: 01844 - 352554

CIRCUIT DESCRIPTION

PLL1

The final PLL1 loop consists primarily of IC13 (MB 87006). The final VCO1 is located in the signal unit, and consists of three VCOs, VCO1A to VCO1C, that cover a dial frequency of 500kHz to 30MHz. (*The final VCO1 consists of four VCOs, VCO1A to VCO1D, in the range of 50MHz to 54MHz.) Any of the VCOs can be selected according to band information from the digital cotrol circuit. The VCO1 signal passes through buffer Q13 (2SC2688Y) of the signal unit, and is applied to the PLL circuit of the control unit. This signal passes through buffer Q14 (2SC 2668Y), and is applied to pin 5 of MIX1 IC12 (SN76514N). The signal is mixed with the signals generated by PLL3 and PLL2. This input signal is also divided into three signals according to band information.

One of the signals generated in the previous loop is applied directly to buffer Q13 (2SC2668Y) by the diode switch according to the band information. The other signal is applied to pin 2 of MIX2 IC11 (SN16913P). When the operating frequency is 500kHz to 10.5MHz, the signal is mixed with the 4.5MHz signal generated by dividing the reference signal by 8 in MIX2, passes through a BPF, become a signal of 37.005MHz to 37.05499MHz, and is applied to buffer Q13. When the operating frequency is 10.5 MHz to 21.5 MHz, the signal is applied directly to buffer Q13 without passing through MIX2. When the operating frequency is 21.5MHz to 30MHz, the signal is mixed with the reference frequency in MIX2, passes through a BPF, becomes a signal of 77.505MHz to 77.55499MHz, and is applied to buffer Q13.

*When the operating frequency is 50MHz to 54MHz, the signal is processed in the same way as the signal for 21.5MHz to 30MHz.

These signsls are applied to pin 11 of MIX1 IC12 through buffer Q13. The difference signal passes through a LPF to become a signal of 3.55MHz to 20MHz, passes through amplifier Q15 (2SC2668Y), and is applied to pin 8 of PLL IC13.

The 4.5MHz reference frequency, fR, is applied to IC13 pin 1, and divided internally by 90 to generate a 50kHz comparison frequency. The signal input to IC13 is divided by N, and compared with the 50kHz reference signal, by the phase comparator. The signal psses through an active LPF, Q16 to Q18 (2SC2459BL), and is sent to the signal unit as the VCO voltage, to control the varactor diode of the last VCO1.

Division ratio, N, covers the overall operating frequency range in 50kHz steps, exept during FM transmit. During FM transmit, N is shifted 9 steps (450kHz) so that the VCO1 output frequency becomes −455kHz. The division ratio is sent from the digital control circuit via DA, CK, and PR1.

Therefore, the final output of PLL1 is 40.555MHz to 70.05499MHz (shifted by −455kHz for FM transmission) as determined by the values of L, M, and N, in 10Hz steps.

*The final output of PLL is 40.555MHz to 70.05499 MHz or 90.055MHz to 94.05499MHz in 10Hz steps.

UNLOCK Detection

If any PLL loop becomes unlocked, pin 11 of IC1, IC4, IC14 and/or pin 7 of IC13 go low, and act as an OR circuit. These signals pass through switching transistors Q25 (DTA 124ES) and Q26 (DTA124ES), and the "L" is sent to the digital cotrol circuit.

At this point, the microprocessor will display the unlock status, and emits the SBK signal to stop the IF signal before the filter via Q29 (2SC2712Y), and the MUTE signal for stopping the audio signal via Q57 (2SC2712Y) before entering the volume control.

50kHz Marker Signal

IC13's 50kHz comparison frequency is emitted from pin 13 and used as a marker signal.

CIRCUIT DESCRIPTION

Digital Control Circuit

Configuration of microprocessor peripheral circuits

As shown in figure 11, the units around microprocessor IC18 (BU18400A) include 16K ROM, IC21 (MBM27C128-25JAJ2), 2K static RAM, IC20 (TC5518CPL), extended I/O IC (TMP8255AP-5; IC22 and IC23 for output only, and IC24 for input only), encorder processing gate array IC26 (LZ92K37), and the microprocessor optional IF-IOC communication IC (μPD8251AFC). The microprocessor address signal is selected by transmitting the chip select signal from IC19 (SN74LS138N). IC15 (PST520D) generates a reset signal according to changes in the 5V line, to reset the microprocessor, the extended I/O IC, and communications IC. The reset signal is also sent to RAM to prevent data destruction due to shock noise when switching power on and off. IC16 (TC4069UBP) rectifies the waveform of the reset signal, and also functions as the buzzer oscillator circuit and system clock oscillator circuit. The timer IC, IC17 (NE555C), generates an AC signal for dynamic lighting of the fluorescent display tube, and gives an interupt signal to the microprocessor. The dynamic lighting function is controlled by the microprocessor. The μPC6300C is the fluorescent display tube driver IC. IC27 (MB4052) is an A/D converter IC to which a voltage corresponding to the rotational position is applied by a variable resistor such as the RIT. IC25 (TC4069UBP) operates as a chatter absorption circuit for the mechanical-type sub-dial rotary encorder.

Most of these circuit are located in the control unit, but the fluorescent display tube, drive IC (μPD6300C), and voltage generation DC/DC module (CPS1175B) are in the display unit.

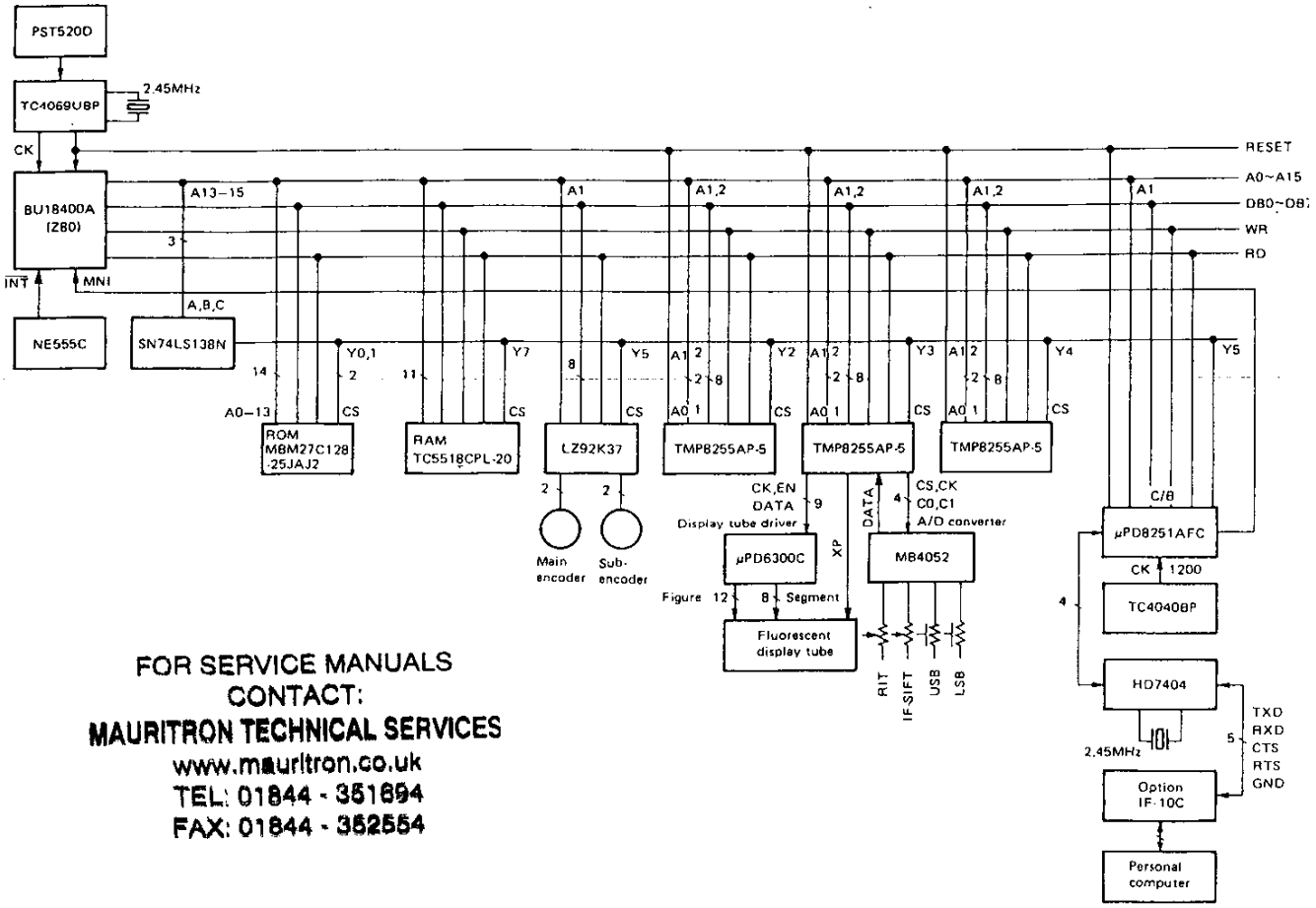

FOR SERVICE MANUALS
CONTACT:
MAURITRON TECHNICAL SERVICES
www.mauritron.co.uk
TEL: 01844 - 351694
FAX: 01844 - 352554

Fig. 11 CPU peripheral circuit

CIRCUIT DESCRIPTION

System Clock Oscillation and System Reset Circuit

Microprocessor IC18 (BU18400A) requires a 2.45MHz system clock. Ceramic oscillator X2 and IC16 (TC4069 UBP) are used to generate the system clocks (figure 12).

IC15 (PST520D) is a reset IC which sends a reset signal to the microprocessor and I/O when the power supply voltage reaches about 4.3V, which halts all function immediately. When the power supply voltage exceeds aproximately 4.3V, the reset signal is emitted and after the time constant set by R151 and C219 elapses, the microprocessor is initialized and operation resumes (figure 13).

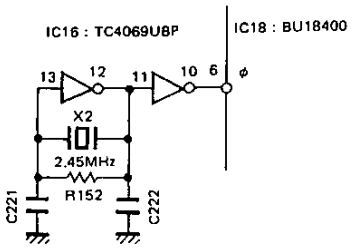

Fig. 12 System clock oscillation circuit

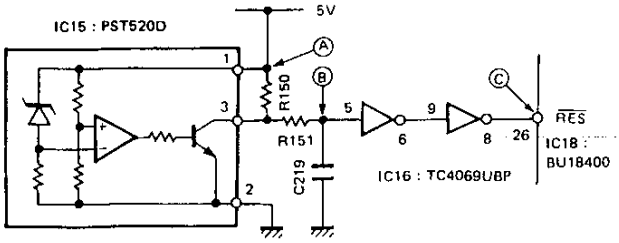

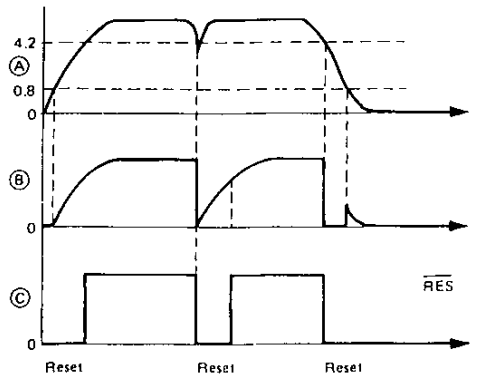

Fig. 13 Reset circuit

Address Control

Microprocessor address lines A0 to A15 cannot select ICs directly, so they are decoded into selection signals by IC19 (SN74LS138N). IC19 has a 64K-bytes memory area which is divided equally into 8 blocks (8K bytes each) and assigned to the ICs. Address control division is shown in figure 14.

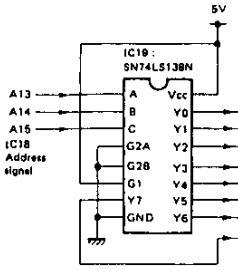

Function	Destination	Physical address
ROM	IC21 ㉑	0000H – 1FFFH
ROM	IC21 ㉒	2000H – 3FFFH
I/O	IC22 ⑧	4000H – 5FFFH
I/O	IC23 ⑨	6000H – 7FFFH
I/O	IC24 ⑩	8000H – 9FFFH
Encoder gate array	IC26 ⑦	A000H – BFFFH
Serial I/O (option)	IC 1 ⑪	C000H – DFFFH
RAM	IC20 ⑫	E000H – FFFFH

Fig. 14 Address control division

FOR SERVICE MANUALS
CONTACT:
MAURITRON TECHNICAL SERVICES
www.mauritron.co.uk
TEL: 01844 - 351694
FAX: 01844 - 352554

CIRCUIT DESCRITPION

Encorder Peripheral Circuit

IC26 (LZ92K37) detects the rotational direction from the dual-phase rotary encorder pulse input, counts up or down, and has two inputs. CK1 and CK2 count all leading and trailing pulse edges, and performs quadruple functions. CK3 and CK4 count the leading and trailing edges of CK3, and performs dual functions. The main dial is an optical type, which inputs signals directly. The sub-dial is a mechanical type, which inputs signals through the chatter absorption circuit.

Count data can be read in the same manner as when reading RAM. CK1 and CK2 have one counter, CK3 and CK4 have another counter. When IC26 A0 is low, the CK1 and CK2 data is read. When A0 is high, the CK3 and CK4 data is read.

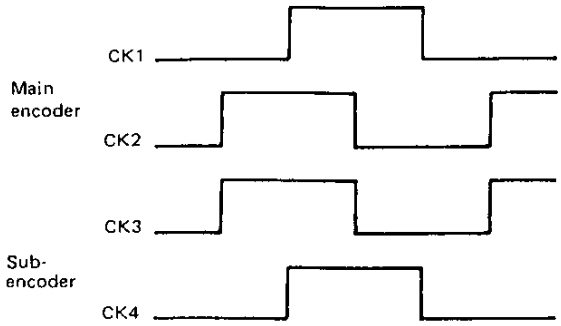

CK1 to CK4 input terminals have built-in pullup resistors.

Fig. 16 Waveforms of IC26, CK1 to CK4, when the dial is turned clockwise

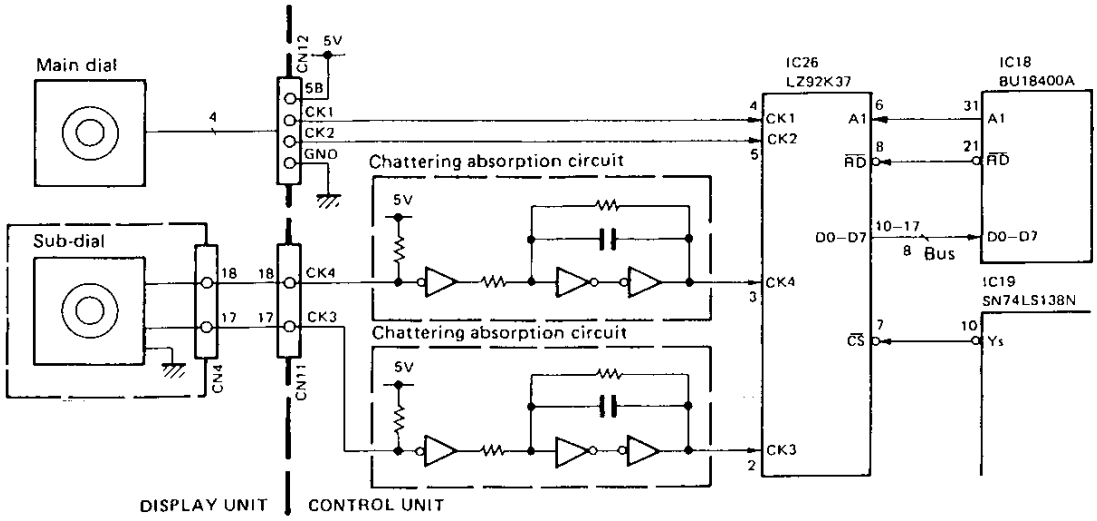

Fig. 15 Encoder peripheral circuit

Display Circuit

The fluorescent display tube is dynamically lit by IC18 (BU18400). The lighting period for one column is given by a negative pulse of IC17 (NE555C). When a low level is applied to the INT input, IC18 starts its interrupt procedure, outputs one column of display data, and the column signal to the fluorescent display tube driver MPD6300C through IC23 (TMP8255AP-5), and outputs data and control signal to the XP terminal, via IC22 port C7. Normally, one cycle ends when the data and signal are output 12 times, since there are 12 columns. However, for yellow (mode) display columns, the data and signal are output 3 times in one cycle because of a lack of sufficient intensity.

Display unit, T1, is the DC/DCE module which generates the drive voltage and filament voltage of the fluorescent display tube. The filament voltage waveform is generated by the oscillator circuit in that module. The frequency fluctuates because the column loads differ from each other, causing a variation in the oscillator frequency. The μPD 6300C input waveforms are seen in each of the oscillator periods of IC17 (See figure 18). Data is shown in figure 19. It is output from the left.

FOR SERVICE MANUALS
CONTACT:
MAURITRON TECHNICAL SERVICES
www.mauritron.co.uk
TEL: 01844 - 351694
FAX: 01844 - 352554

CIRCUIT DESCRIPTION

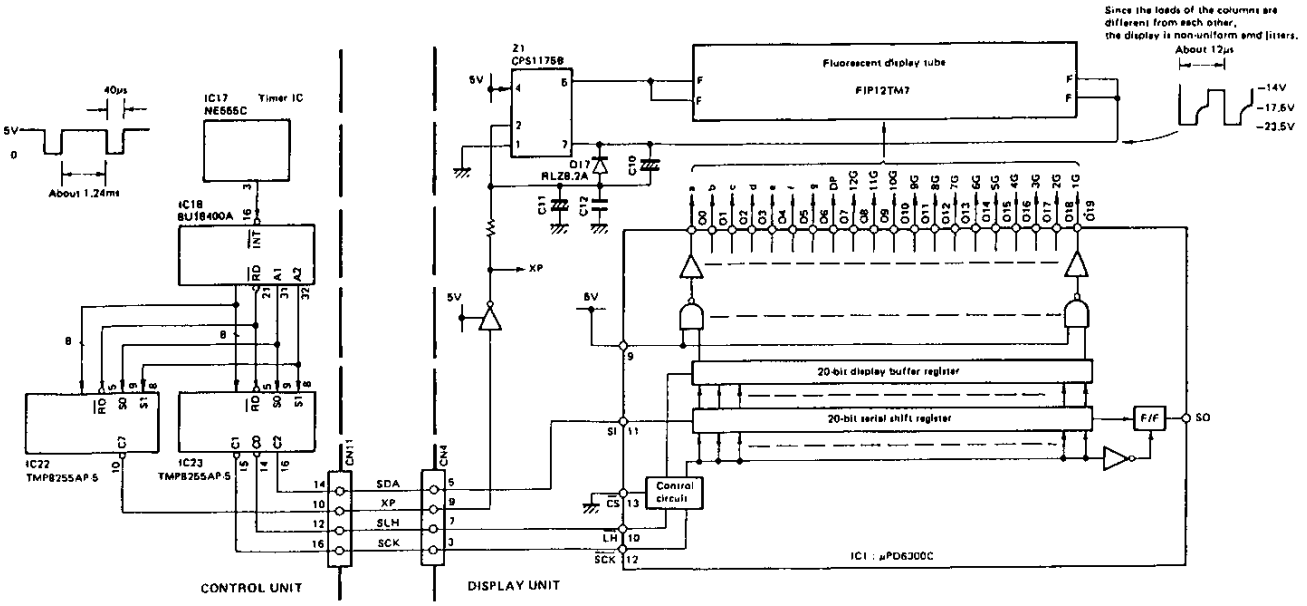

Fig. 17 Display circuit

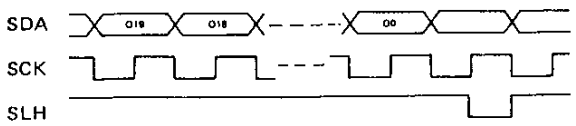

Fig. 18

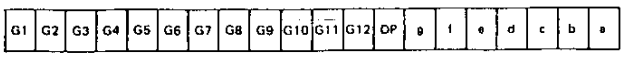

Fig. 19

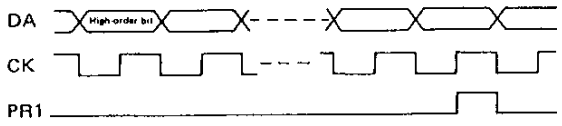

Fig. 20

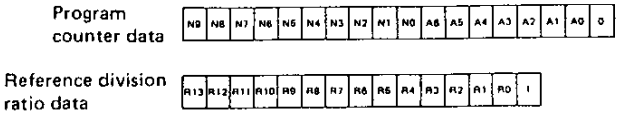

Fig. 21

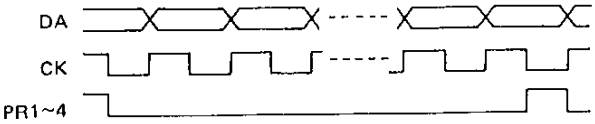

Fig. 22

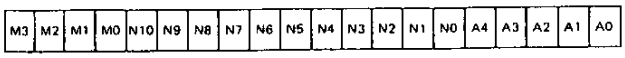

Fig. 23

PLL Data Output

Four PLLs are controlled. The 50kHz-step loop PLL1 uses the MB87006, and other loops use the M54927P.

Data is output for the MB87006 as shown in figure 20.

Both reference division ratio data and program counter data are given to the MB87006. Reference division ratio data are supplied only when the power is turned on. The data formats are as shown in figure 21. Data is output from the left.

Data is output to the M54927P as shown in figure 22.

Data output to the M54927P is shown in figure 23. It is output from the left.

This PLL data is output only to the PLL when changed.

CIRCUIT DESCRIPTION

Band Output

The BPF and LPF are switched by output ports A0 to A4 (B0 to B4) of IC22 (TMP8255AP-5). The PLLs are switched by output ports C4 to C6 (VB1 to VB3). The levels of the ports in each frequency range are shown in the figure below:

Freq' (MHz)	B4	B3	B2	B1	B0	VB3	VB2	VB1
0 – 0.5	H	L	L	L	L	L	L	H
0.5 – 1.6	H	L	L	L	H	L	L	H
1.6 – 2.5	L	L	L	H	L	L	L	H
2.5 – 4.0	L	L	L	H	H	L	L	H
4.0 – 6.5	H	L	H	L	L	L	L	H
6.5 – 7.5	L	L	H	L	H	L	L	H
7.5 – 10.5	H	L	H	H	L	L	L	H
10.5 – 14.5	L	L	H	H	H	L	H	L
14.5 – 19.0	H	H	L	L	L	L	L	L
19.0 – 21.5	L	H	L	L	L	L	L	L
21.5 – 25.0	H	H	L	L	H	H	L	L
25.0 – 30.0	L	H	L	L	H	H	L	L
50.0 – 54.0	L	H	L	H	L	H	L	L

Table 6

A/D Converter Analog Input

The four types of analog input, RIT, IF shift, carrie point correction for LSB and USB, are A/D converted, anc loaded into the microprocessor as digital values. The con trol unit has the A/D converter, IC27 (MB4052), to whicl a channel select signal (CS) and data input control signal (C0 and C1) are applied.

The microprocessor sends a channel select signal first then a positive pulse from the A2 port of IC23 (TMP825 AP-5) to reset the A/D coverter IC27 (MB4052). After 9 clock pulses have been sent from IC23 C6 port, the con verted digital values are sent from A/D converter IC27 tc the C6 port ofIC24: TMP8255AP-5 in synchronization witl the clock pulses. The A/D converter peripheral circuit anc timing charts are shown in figures 24 and 25.

FOR SERVICE MANUALS
CONTACT:
MAURITRON TECHNICAL SERVICES
www.mauritron.co.uk
TEL: 01844 - 351694
FAX: 01844 - 352554

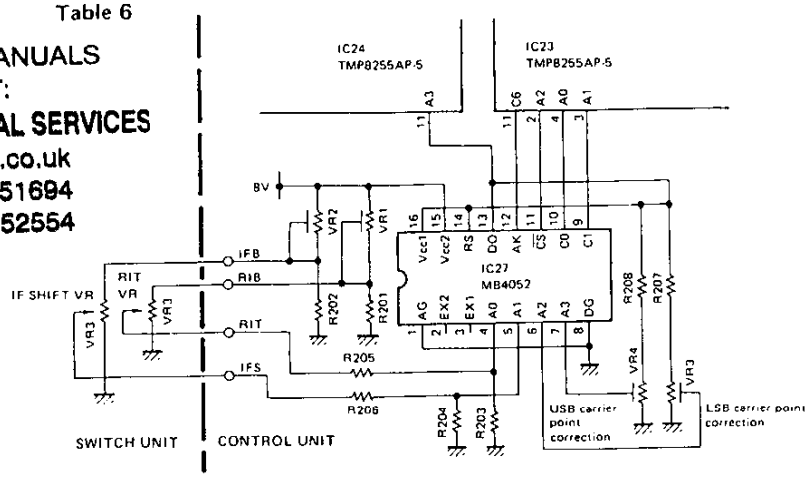

Fig. 24 A/D converter peripheral circuit

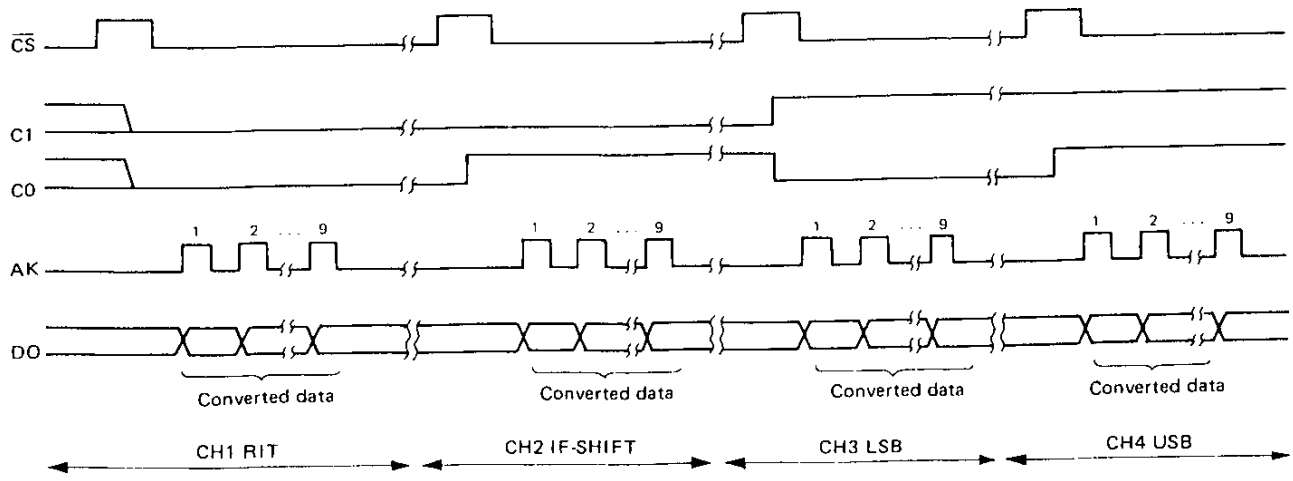

Fig. 25 A/D converter data read timing chart

CIRCUIT DESCRIPTION

Key Scan and Extended Diode

A key scan signal with a negative pulse is sent from ports B4 to B7 and C5 of IC23 (TMP8255AP-5). One column, corresponding to ports B0 to B3 of IC24 (TMP8255AP-5) is selected, and the ON/OFF state of the switch is sensed. When the switch at an intersection of the matrix is on, the corresponding bit of ports B0 to B3 of IC24 goes low, thus detecting. The activation of the switch.

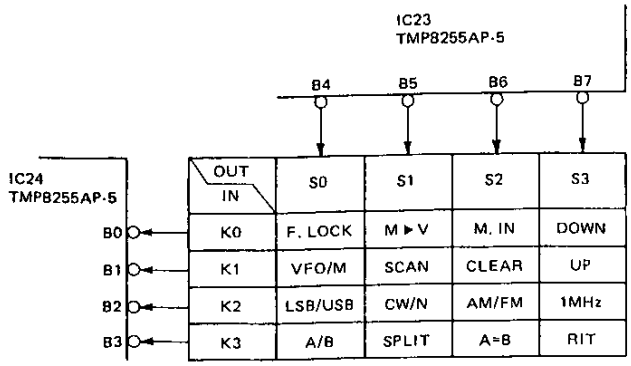

Fig. 26

Transmit Timing Control Signal

The full Break-in timing is generated by the microprocessor, and is sent as the CTX, RB, and CKY signals from port C of IC22 (TMP8255AP-5). When transmit/receive switching is detected at port A6 of IC24 (TMP8255AP-5), the CSS signal is output with the following timing.

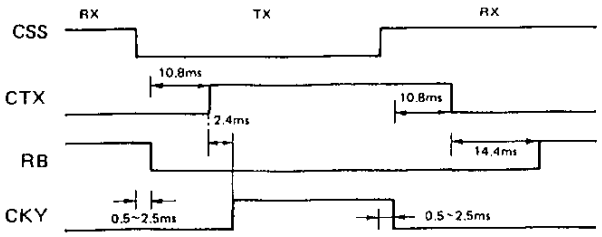

Fig. 27

FOR SERVICE MANUALS
CONTACT:
MAURITRON TECHNICAL SERVICES
www.mauritron.co.uk
TEL: 01844 - 351694
FAX: 01844 - 352554

SFT Output

The SFT output signal is output during FM and AM reception, and stops the CAR output.

TOB Output

The TOB output is stored in the memory channel, split channel, in FM mode, and output only during transmission. Repeater subtone control signal.

14V Input

To clear any meaningless display when the power switch is turned on or off, the 13.8V line is monitored. When this input goes low, the display is cleared.

SBK and MUT Output

This signal cuts the PLL switching noise.

I/O port functions

1) IC22 (Output only)

Terminal Name	Pin No.	Symbol	Function	Active level
A0	4	B0	Band switching output. (See the text.)	H
A1	3	B1		
A2	2	B2		
A3	1	B3		
A4	40	B4		
A5	39	50M	Unused.	H
A6	37	HFL		
A7	37	HFL		
B0	18	MUT	Cut the AF signal.	H
B1	19	PD	28MHz band power down.	H
B2	20	SBK	Cut the RF signal.	H
B3	21	CWN	Indicates CW-N.	H
B4	22	FM	Mode output.	H
B5	23	AM		
B6	24	CW		
B7	25	SSB		
C0	14	CTX	Transmit control signal. (See the text.)	H
C1	15	RB		
C2	16	CKY		
C3	17	TOB	Output the subtone (Option).	H
C4	13	PB0	PLL band switching signal. (See the text.)	H
C5	12	PB1		
C6	11	PB2		
C7	10	XP	Fluorescent display tube red letter segment signal.	L

CIRCUIT DESCRIPTION/SEMICONDUCTOR DATA

2) IC23 (Output only)

Terminal Name	Pin No.	Symbol	Function	Active level
A0	4	C0	IC27:MB4052 control signal. (See the text.)	
A1	3	C1		
A2	2	CS		
A3	1	SFT	CAR cut signal.	H
A4	40	PR1	PLL enable signal. (See the text.)	
A5	39	PR2		
A6	38	PR3		
A7	37	PR4		
B0	18	LF	F.LOCK LED signal.	H
B1	19	LM	M.SCR LED signal.	H
B2	20	L1	1MHz LED signal.	H
B3	21	–	Unused.	
B4	22	S0	Key scan output. (See the text.)	L
B5	23	S1		
B6	24	S2		
B7	25	S3		
C0	14	SLH	Fluoresent display tube drive IC signal. (See the text.)	
C1	15	SCK		
C2	16	SDA		
C3	17	EN	Unused.	
C4	13	DA	PLL data signal. (See the text.)	
C5	12	CK		
C6	11	AK	IC27:MB4052 control signal. (see the text.)	
C7	10	BZ	Turns the buzzer oscillator circuit on.	H

3) IC24 (Input only)

Terminal Name	Pin No.	Symbol	Function	Active level
A0	4	–	Unused.	
A1	3	–		
A2	2	UL	Detect the unlock state.	L
A3	1	AD	IC27:MB4052 data signal.	
A4	40	MU	MIC UP/DOWN switch.	L
A5	39	MD		
A6	38	CSS	CSS line signal transmission detection.	L
A7	37	14V	Power switch off detection.	L
B0	18	–	Unused.	
B1	19	–		
B2	20	–		
B3	21	–		
B4	22	–		
B5	23	–		
B6	24	–		
B7	25	–		
C0	14	–	Unused.	
C1	15	–		
C2	16	–		
C3	17	–		
C4	13	–		
C5	12	–		
C6	11	–		
C7	10	–		

M54927P : PLL IC (Control unit IC1, 4, 14)

- Terminal connection diagram

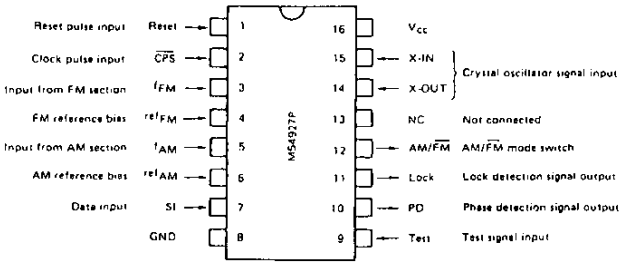

- Block diagram

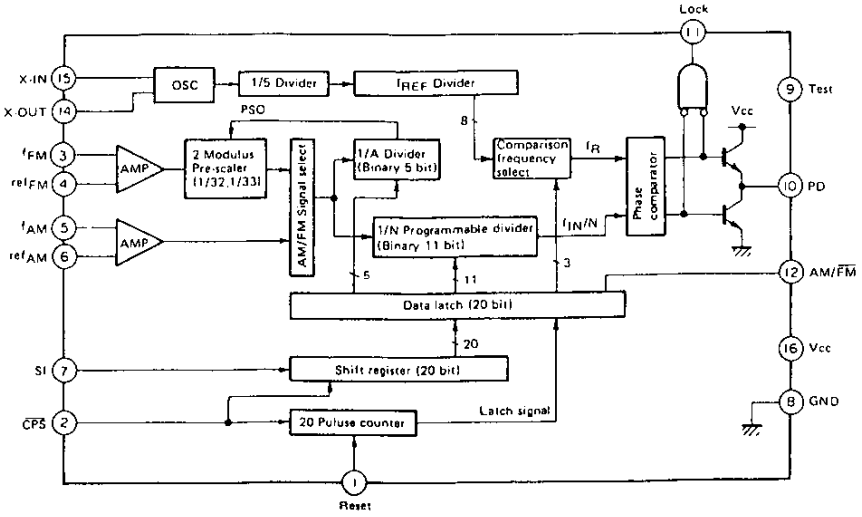

SEMICONDUCTOR DATA

M54459L : Divider (Control unit IC2)

- **Terminal connection diagram**

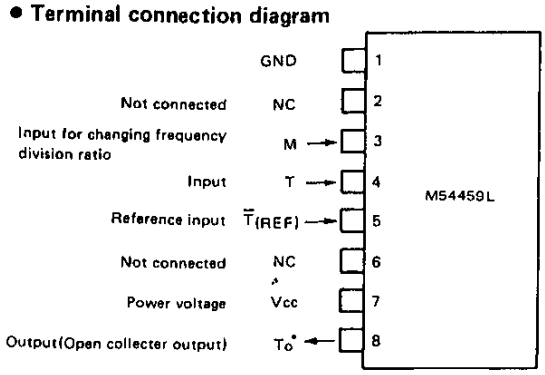

- **Block diagram**

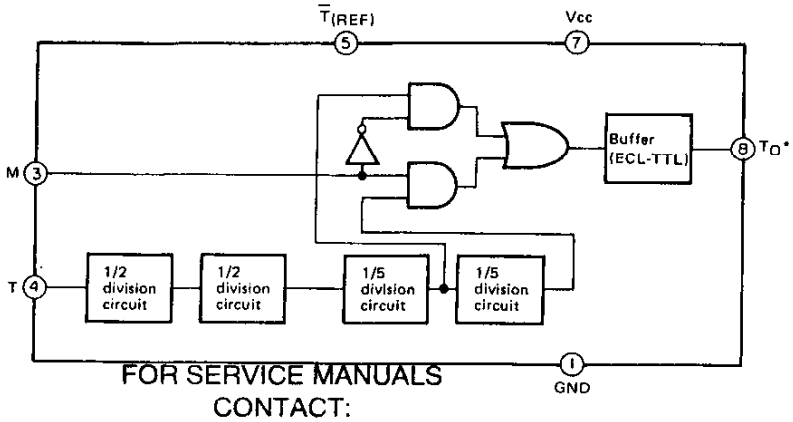

- **Input for changing frequency division ratio (M) and division ratio**

M	"L"	"H"
Division ratio	1/20	1/100

FOR SERVICE MANUALS
CONTACT:
MAURITRON TECHNICAL SERVICES
www.mauritron.co.uk
TEL: 01844 - 351694
FAX: 01844 - 352554

M54460L : Divider (Control unit IC5)

- **Terminal connection diagram**

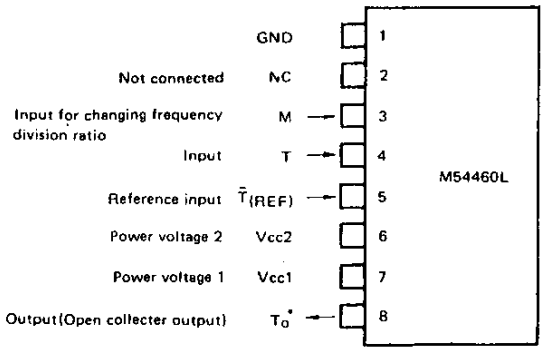

- **Block diagram**

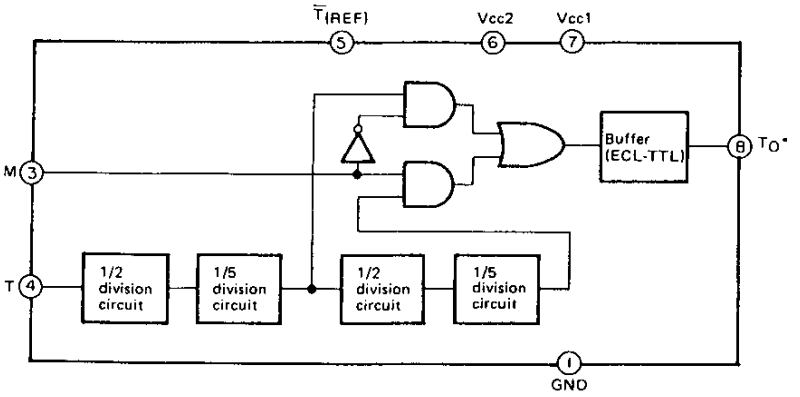

M74LS93P : Divider (Control unit IC8)

- **Terminal connection diagram**

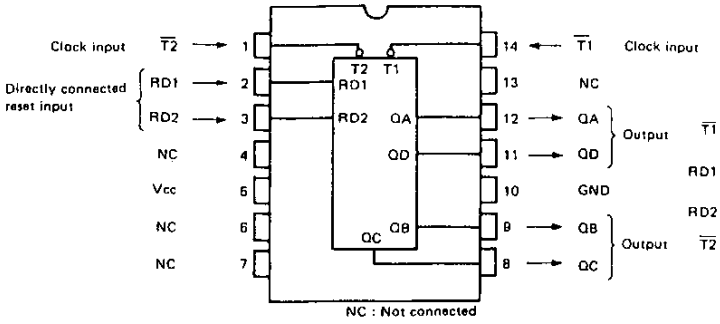

- **Logic circuit**

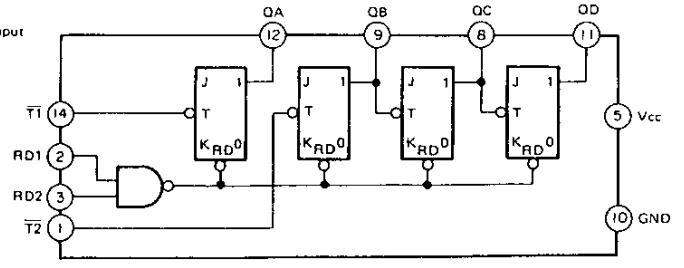

SEMICONDUCTOR DATA

SN76514N : Mixer (Control unit IC12)

- **Terminal connection diagram**

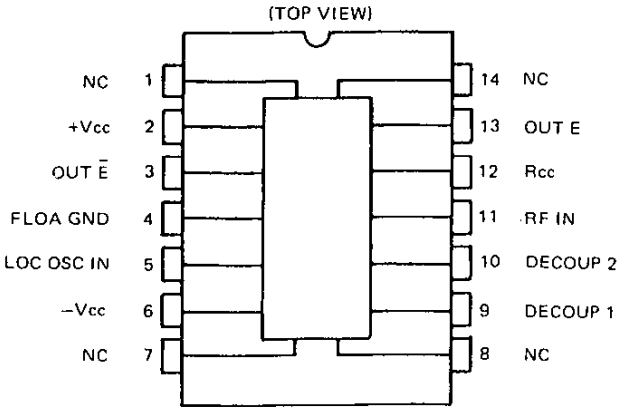

- **Equivalent circuit**

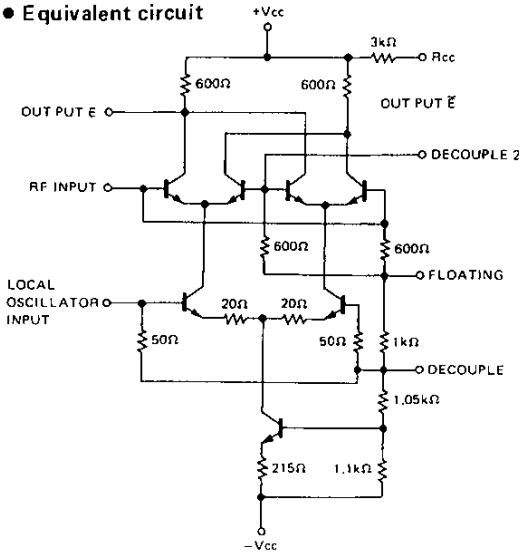

MB87006 : PLLIC (Control unit IC13)

- **Terminal connection diagram**

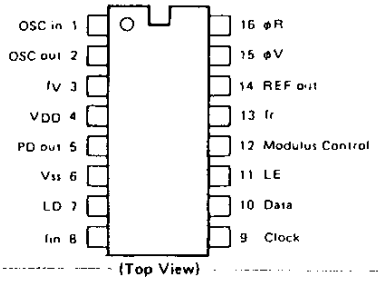

- **Terminal function**

Terminal No.	I/O	Terminal name	Terminal No.	I/O	Terminal name
1	I	OSC in	9	I	Clock
2	O	OSC out	10	I	Data
3	O	fv	11	I	LE
4	–	V_{DD}	12	O	Modulus Control
5	O	PD out	13	O	fr
6	–	V_{SS}	14	O	REF out
7	O	LD	15	O	φV
8	I	fin	16	O	φR

- **Block diagram**

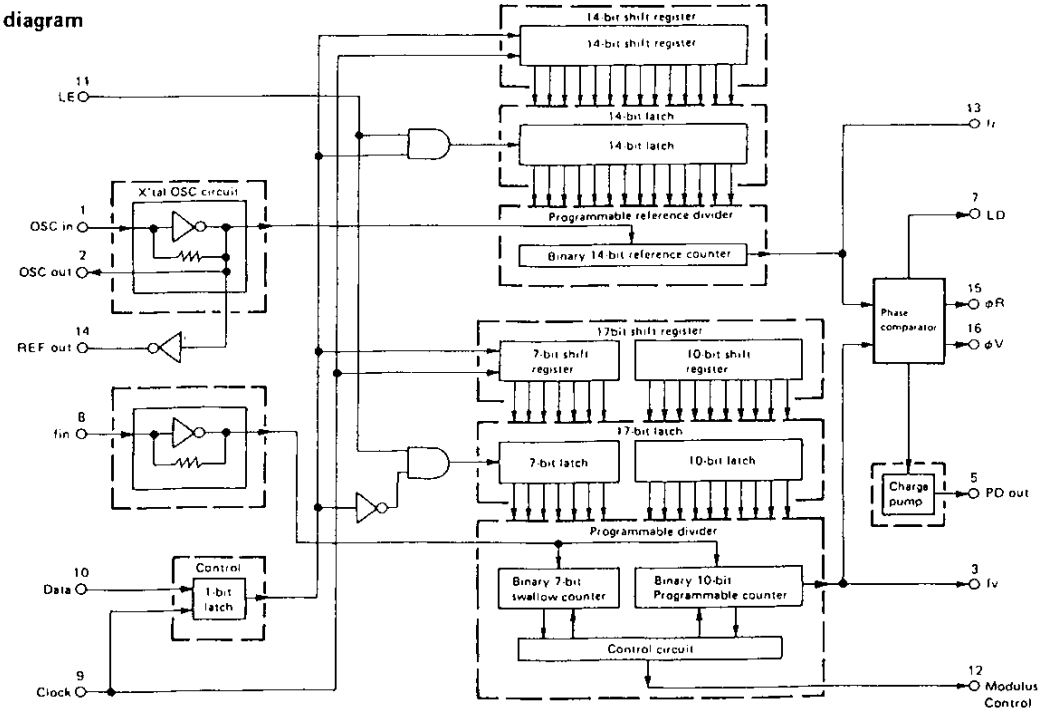

SEMICONDUCTOR DATA

PST520D : System reset (Control unit IC15)

- **Equivalent circuit**

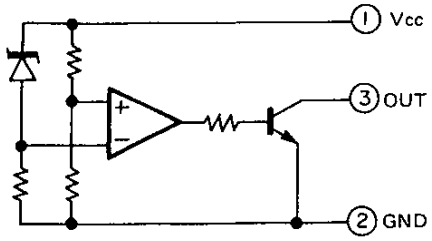

TC4069UBP : Inverter (Control unit IC16,25)

- **Block diagram**

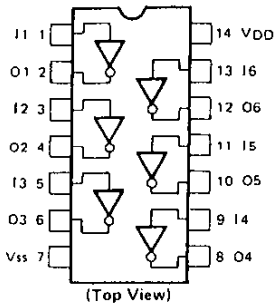

NE555C : System clock oscillator (Control unit IC17)

- **Terminal connection diagram**

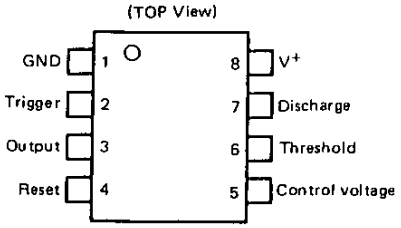

- **Equivalent circuit**

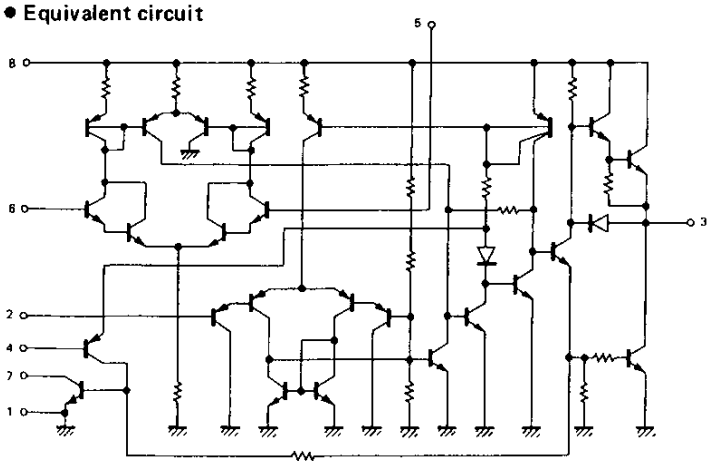

TC5518CPL-20 : Static RAM (Control unit IC20)

- **Block diagram**

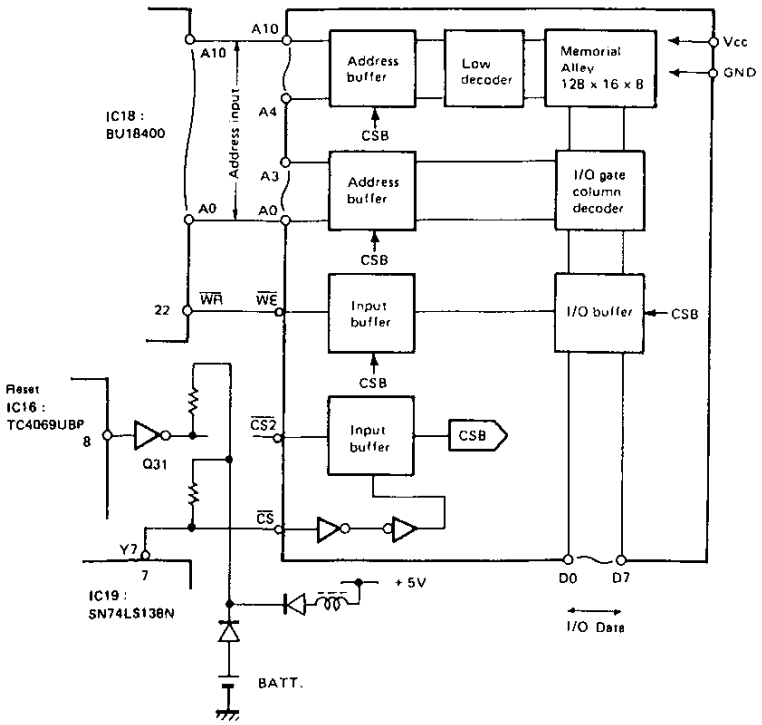

- **Terminal function**

Terminal name	Function
A0~A10	Address input
D0~D7	Data input/output
$\overline{CS}$	Chip select 1
$\overline{SC2}$	Chip select 2
$\overline{WE}$	Write enable
Vcc	Power supply (+ 5V)
GND	Ground

FOR SERVICE MANUALS
CONTACT:
MAURITRON TECHNICAL SERVICES
www.mauritron.co.uk
TEL: 01844 - 351694
FAX: 01844 - 352554

SEMICONDUCTOR DATA

BU18400A : CPU (Control unit IC18)

• **Block diagram**

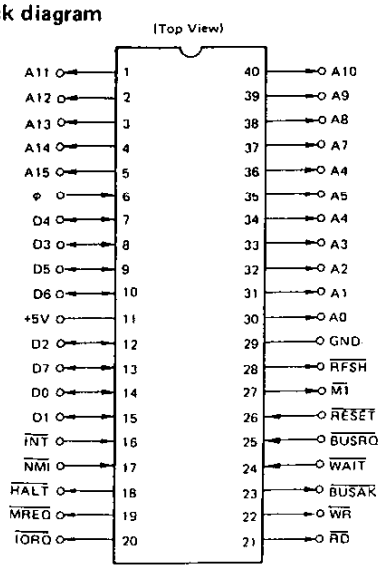

• **Block diagram**

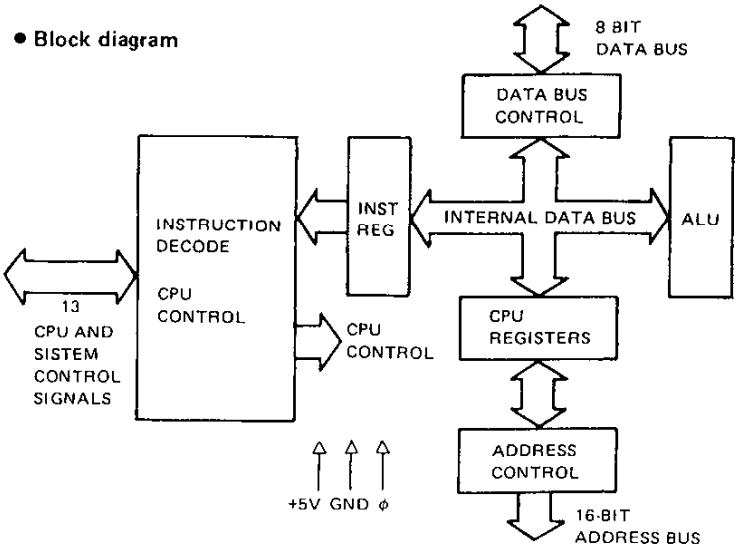

• **Terminal function**

Terminal (Signal) name	Input/Output	Terminal (Signal) function
A0 ~ A15 (Address Bus)	3-state output Active "H"	16-bit address bus. Outputs address of memory or I/O device No.. When memory is refreshed, refreshed address is output to seven bits at lower places.
D0 ~ D7 (Data Bus)	3-state Input/output Active "H"	8-bit data bus. Used to transfer data between memory or I/O device and CPU.
$\overline{M1}$ (Machin Cycle one)	Output Active "L"	Signal which indicates started machine cycle is OP code fetch cycle.
$\overline{MREQ}$ (Memory Request)	3-state output Active "L"	Signal which indicates address information necessary for reading and writing memory is output to address bus.
$\overline{IORQ}$ (Input/Output Request)	3-state output Active "L"	During M1 cycle This signal request outside devices to add interruption response vector to data bus when maskable interruption is acknowledged. Out of M1 cycle This signal indicates I/O device No. necessary for reading and writing I/O is output to the address bus.
$\overline{RD}$ (Read)	3-state output Active "L"	Signal which indicates data is being input in data bus. Memory or I/O device sends data to the data bus, synchronizing with this signal
$\overline{WR}$ (Write)	3-state output Active "L"	Signal which indicates data is being output by data bus. Data to be sent to memory or I/O device is supplied to data bus, synchronizing with this signal.
$\overline{RFSH}$ (Refresh)	Output Active "L"	Signal which indicates refreshed address for dynamic RAM is output to seven bits at lower places of address during M1 cycle. Dynamic RAM reads refreshed address by using $\overline{MREQ}$ signal output at the same time as $\overline{RFSH}$ signal.
$\overline{HALT}$ (Halt State)	Output Active "L"	Signal which indicates HALT command is executed and CPU is set under HALT condition. When returning from HALT condition, any one of INT, $\overline{NM1}$ or $\overline{RESET}$ signals is necessary. CPU continues to refresh memory executing NOP command during HALT.
WAIT (Wait)	Input Active "L"	While this signal is active, CPU continues to wait. If this signal is used, low-speed memory or I/O device can be directly connected to CPU. While CPU is waiting, memory is not refreshed.
$\overline{INT}$ (Interrupt Request)	Input Active "L"	Input terminal for interruption request signal. If this signal becomes active while interruption is permitted, CPU starts interruption program after finishing command being executed.
$\overline{NMI}$ (Non Maskable Interrupt)	Input Negative edge trigger	Input terminal for nonmaskable interruption request signal. If this signal becomes active, CPU jumps to address 0066 (16) after finishing command being executed, regardless of permission of interruption. Priority higher than $\overline{INT}$ signal is given to $\overline{NM1}$ signal.
$\overline{RESET}$ (Reset)	Input Active "L"	If this signal becomes active, CPU is reset.
$\overline{BUSRQ}$ (Bus Request)	Input Active "L"	If this signal becomes active, CPU heighten impedance of address bus (A0 ~ A15), data bus (D0 ~ D7) and 3-state system control terminals ($\overline{MREQ}$, $\overline{IORQ}$, $\overline{RD}$, and $\overline{WR}$). Thus, other devices can use above external buses. Priority higher than $\overline{NM1}$ signal is given to $\overline{BUSRQ}$ signal.
$\overline{BUSAK}$ (Bus Acknowledge)	Output Active "L"	Signal which indicates CPU has received $\overline{BUSRQ}$ signal and heightened impedance of address bus, data bus and 3-state system control terminal.
φ (Clock)	Input	+5V single-phase clock input terminal.

SEMICONDUCTOR DATA

SN74LS138N : Address decoder (Control unit IC19)

- **Logic circuit**

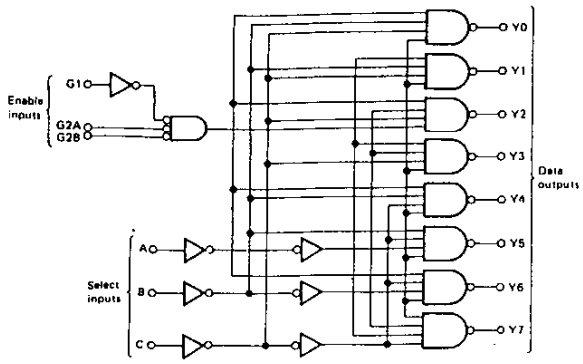

- **Block diagram**

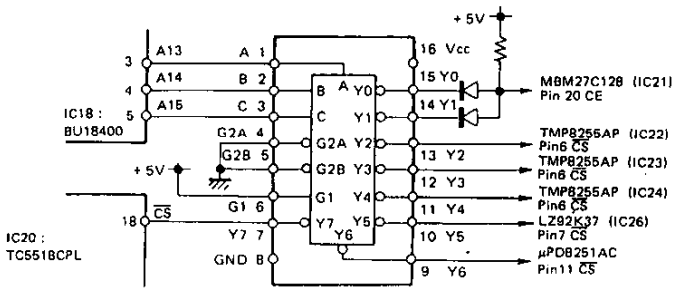

- **Truth table**

INPUT					OUTPUT							
Enable		Select										
G1	G2	C	B	A	Y0	Y1	Y2	Y3	Y4	Y5	Y6	Y7
X	H	X	X	X	H	H	H	H	H	H	H	H
L	X	X	X	X	H	H	H	H	H	H	H	H
H	L	L	L	L	L	H	H	H	H	H	H	H
H	L	L	L	H	H	L	H	H	H	H	H	H
H	L	L	H	L	H	H	L	H	H	H	H	H
H	L	L	H	H	H	H	H	L	H	H	H	H
H	L	H	L	L	H	H	H	H	L	H	H	H
H	L	H	L	H	H	H	H	H	H	L	H	H
H	L	H	H	L	H	H	H	H	H	H	L	H
H	L	H	H	H	H	H	H	H	H	H	H	L

Note 1 : G2 = G2A + G2B
Note 2 : H : High level
L : Low level
X : Either "H" or "L"

FOR SERVICE MANUALS CONTACT:
MAURITRON TECHNICAL SERVICES
www.mauritron.co.uk
TEL: 01844 - 351694
FAX: 01844 - 352554

LZ92K37 : Counter (Control unit IC26)

- **Terminal connection diagram**

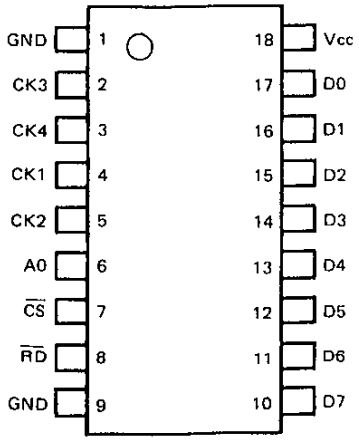

- **Terminal function**

Pin No.	I/O	Signal name	Pin No.	I/O	Signal name
1	–	GND	10	TO	D7
2	Icu	CK3	11	TO	D6
3	Icu	CK4	12	TO	D5
4	Icu	CK1	13	TO	D4
5	Icu	CK2	14	TO	D3
6	Ic	A0	15	TO	D2
7	Ic	CS	16	TO	D1
8	Ic	RD	17	TO	D0
9	–	GND	18	–	Vcc

Ic : C-MOS level input buffer
Icu : Input buffer with C-MOS level pull-up resistance
TO : Tristate output buffer

- **Terminal function**

Terminal name	Terminal function
CK1, 2	Rotary encoder pulse input
CK3, 4	Rotary encoder pulse input
A0	Output data selection input, 0 = CK1, 2 1 = CK3, 4
CS	Chip select input
RD	Read enable input
D0 ~ D7	Data bus output

SEMICONDUCTOR DATA

TMP8255AP-5 : I/O Port (Control unit IC22~24)

- **Block diagram**

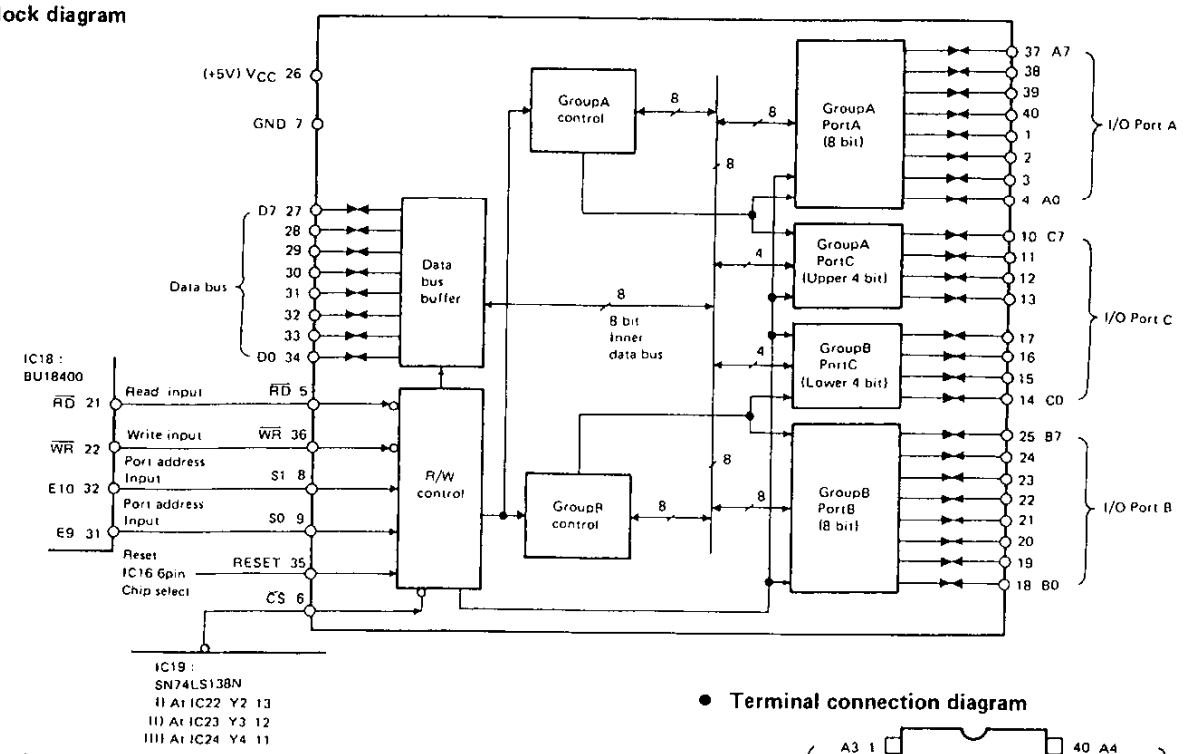

- **Basic function**

SI	SO	$\overline{CS}$	$\overline{RD}$	$\overline{WR}$	Function
L	L	L	L	H	Data bus ← Port A
L	H	L	L	H	Data bus ← Port B
H	L	L	L	H	Data bus ← Port C
L	L	L	H	L	Port A ← Data bus
L	H	L	H	L	Port B ← Data bus
H	L	L	H	L	Port C ← Data bus
H	H	L	H	L	Control register ← Data bus
–	–	H	–	–	Data bus is in the high-impedance state.
H	H	L	L	H	Prohibit assortment

- **Terminal connection diagram**

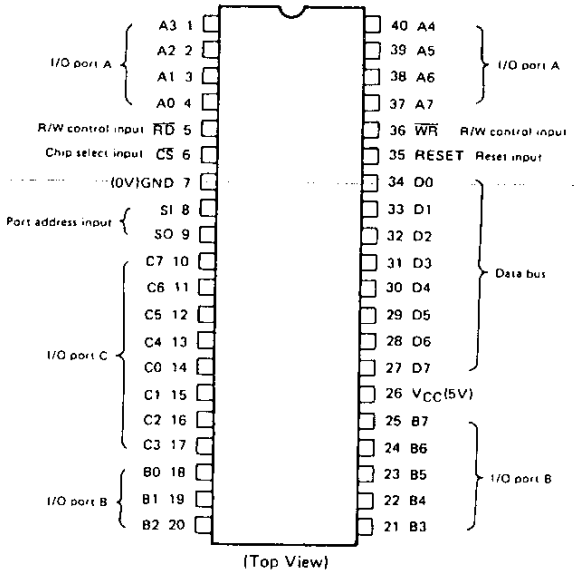

MBM27C128-25JAJ2 : ROM (Control unit IC21)

- **Block diagram**

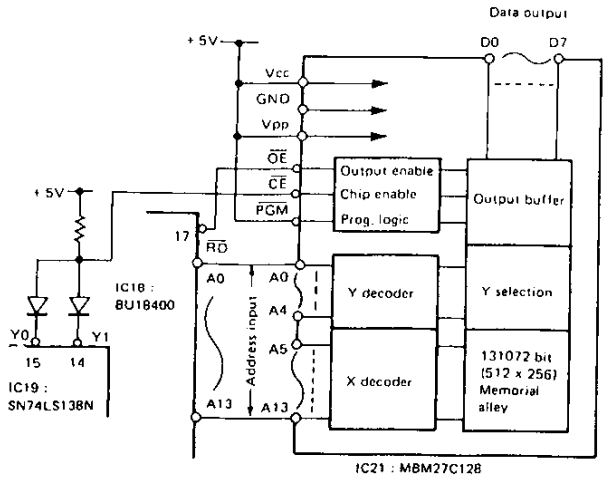

- **Terminal function**

Terminal name	Function
A0~A13	Address input
D0~D7	Data output
$\overline{CE}$	Chip enable input
$\overline{OE}$	Output enable input
$\overline{PGM}$	Program input
Vcc	Power supply
Vpp	Program power supply
GND	Ground

SEMICONDUCTOR DATA

MB4052 : A/D Converter (Control unit IC27)

• **Terminal connection diagram**

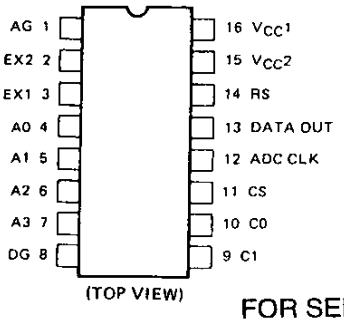

FOR SERVICE MANUALS
CONTACT:
MAURITRON TECHNICAL SERVICES
www.mauritron.co.uk
TEL: 01844 - 351694
FAX: 01844 - 352554

• **Block diagram**

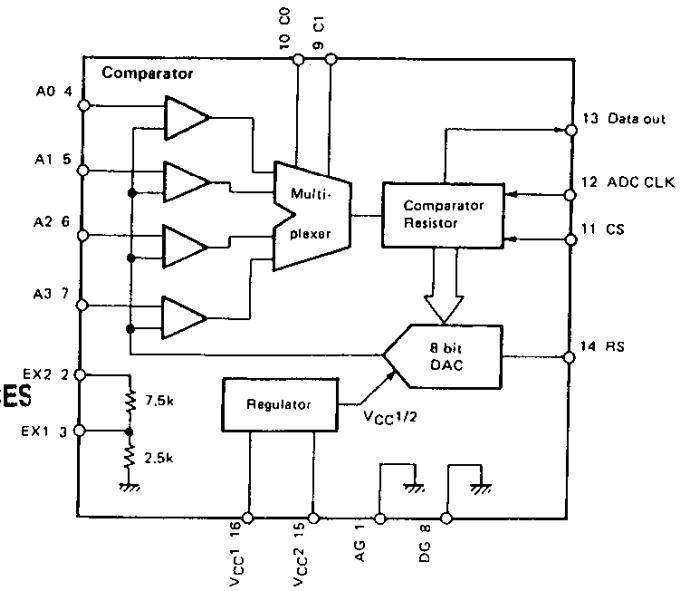

• **I/O signal pin function**

Pin No.	Pin name	Symbol	Function
1	Analog ground	AG	Ground terminal
2	Range expander input	EX2	Analog input pin for expanding the range.
3	Range expander output	EX1	Analog output pin for expanding the range. Connect to any pin from A0 to A3. By using EX1, EX2, the range is expanded to the X 4 range.
4~7	Analog entrance	A0~A3	4-ch analog input pin. Channel 1 is selected by channel select input C0 to C1.
8	Digital ground	DG	Ground terminal
9	Channel select input	C0	The input pin to designate the analog input channel for A/D converter. This signal is latched at the trailling edge of CS.
10		C1	
11	Chip select input	CS	This is the chip select input pin. When CS is inverted from "1" to "0", A/D converting starts and data output is enabled. After A/D converting is over or when an interrupt is required, set the CS back to "1".
12	A/D conversion clock	ADC CLK	This is the clock input pin for A/D conversion input to the comparator register sequentially. Conversion speed is determined by the clock speed. In the case of 8-bit, approx. 10 clocks will be needed. However, it is not necessary that the clock period be fixed.
13	Data output	DATA OUT	This is the open collector to output the result of A/D conversion. The data is output in the order of the start bit, most significant bit, 2nd significant bit, . . . , least significant bit, and the stop bit, synchronized with ADCCLK.
14	Range select input	RS	This is the input pin for selecting the voltage range of analog input. The VFS = VCC1/8 range is selected at "0", and the range of FVS = VCC1/2 is selected at "1". During conversion, hold this pin to "0" or "1".
15 16	Power supply pin 2 Power supply pin 1	VCC2 VCC1	When driving with 3.5V to 6.0V of power, connect VCC1 and VCC2 to each other, and apply the power voltage to them. When driving 8 to 18V of power, apply the power voltage to VCC2. At this time, the 5V stabilized voltage is output to VCC1, and approx. 10mA current can be supplied externally to the IC. When either 3.5~6.0V or 8~18V power is used, VCC1 is the reference voltage for A/D conversion.

• **Channel select**

C1	C0	Selected Ch.
0	0	A0
0	1	A1
1	0	A2
1	1	A3

• **Range select**

RS	Conversion voltage range
0	$0 \sim \frac{Vcc1}{8}$
1	$0 \sim \frac{Vcc1}{2}$

SEMICONDUCTOR DATA

μPD6300C : Fluorescent display tube driver (Display unit IC1)

- Terminal function

Terminal No.	Symbol	Terminal name	I/O	Function
1~7	O13~O19	FIP segment driver	O	High dielectric-strength (40V) output in the Pch open. Corresponds to the output of O13~O19.
8	SO	Serial data output pin	O	Output serial data the trailing edge of SCK, when the n-number of μPD6300Cs are connected in series, this can be connected to the SI of the following stage.
9	$\overline{BI}$	Blanking pin	I	This input can turn off all indicator or displays, and can dim them by applying a random duty pulse from outside. Active low.
10	$\overline{LH}$	Latch pin	I	Transmits the connects of the serial shift register to the buffer register at low level, to latch the connects at the rising time. Active rising (leading) edge.
11	SI	Serial data input pin	I	This is the data input pin. Inputs data to the shift register at the rising edge of SCK.
12	SCK	Serial clock input pin	I	Reads out the SI data to the shift register at the rising edge of SCK. Outputs data from SO at the trailing edge of SCK.
13	$\overline{CS}$	Chip select pin	I	When CS is high, this inhibits SCK and $\overline{LH}$, and when CS is low, activates SCK and $\overline{LH}$.
14	Vss	GND	–	Connect to the GND terminal of the system.
15~27	O0~O12	FIP segment driver	O	Pch open-drain system, high dielectric-strength output. Corresponds to the output of O0~O12. 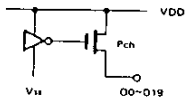
28	VDD	Power supply pin	–	5V ± 10%

- Terminal connection diagram

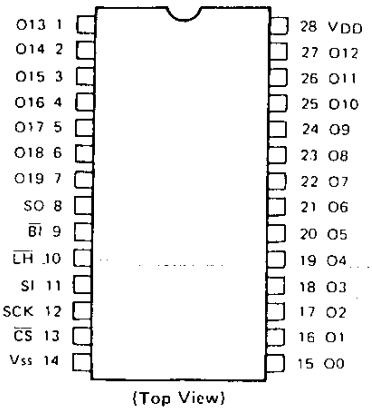

(Top View)

M54581P : Band data driver (Signal unit IC1)

- Terminal connection diagram

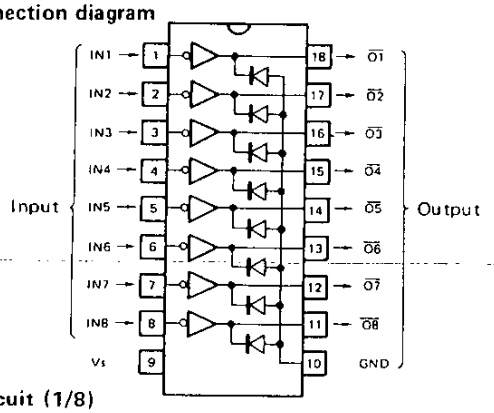

- Equivalent circuit (1/8)

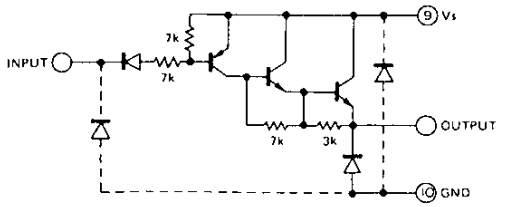

TC4066BP : Switch (Signal unit IC7~10)

- Equivalent circuit (1/4)

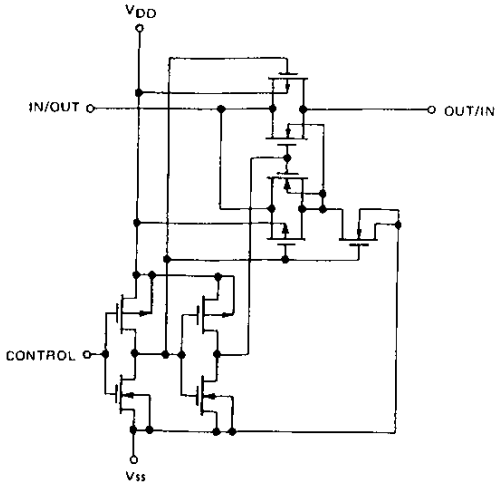

- Terminal connection diagram

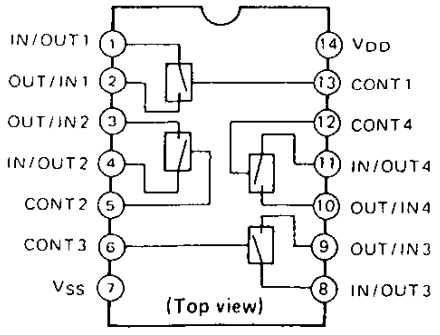

(Top view)

SEMICONDUCTOR DATA

μPD8251AFC (Option IF-10C IC1)

• **Block diagram**

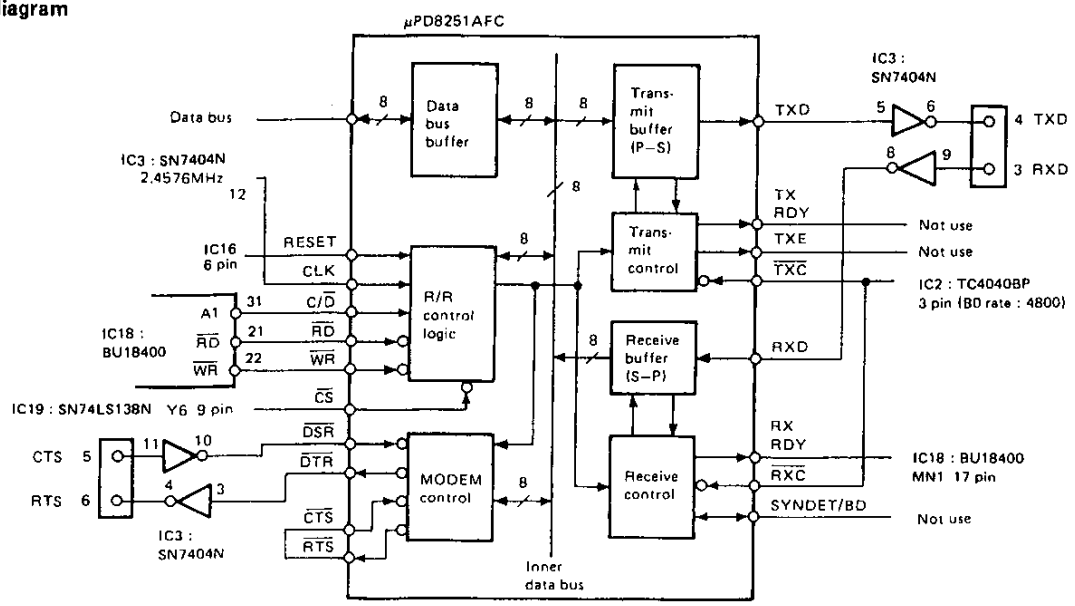

TC4040BP (Option IF-10C IC2)

• **Block diagram**

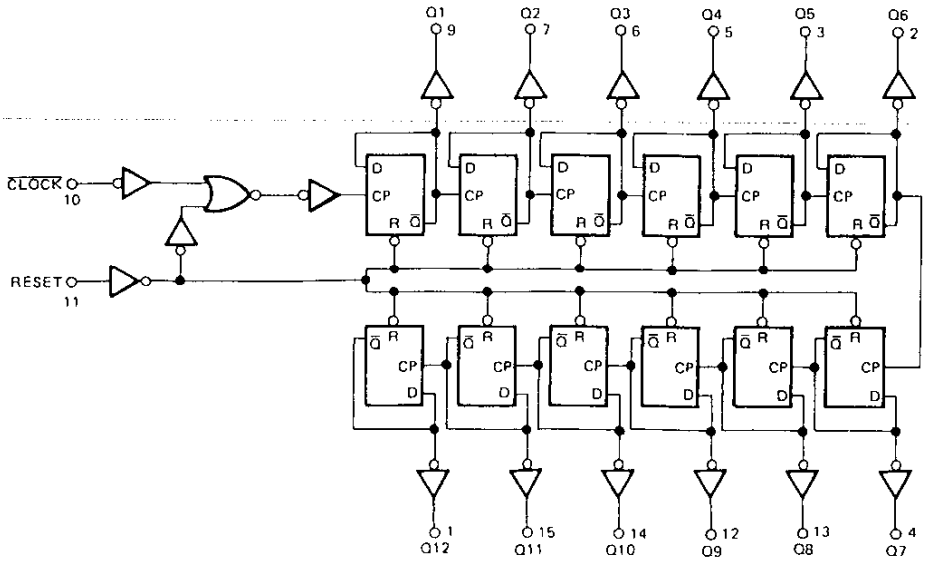

H D7404P (Option IF-10C IC3)

• **Block diagram**

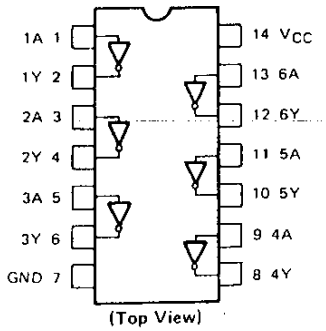

FOR SERVICE MANUALS
CONTACT:
MAURITRON TECHNICAL SERVICES
www.mauritron.co.uk
TEL: 01844 - 351694
FAX: 01844 - 352554

DESCRIPTION OF COMPONENTS

SWITCH UNIT (X41-3030-XX)

Component	Use/Function	Operation/Condition/Compatibility
IC1	Microphone amplifier	Processing of audio signals, speach processor.
Q1	Switching transistor	Q1 is ON when PRS is "H".
Q2~4	Switching transistor	Q2~4 are ON when PKS is "L".
Q5	Amplification of control signal	
Q6	Amplifier	For VOX. **TS-140S only**
D1	Detection of control signal	
D2,3	Switching diode	D2 is ON when RXB is "H". D3 is ON when PKS is "L".

100W FINAL UNIT (X45-3100-XX)

Component	Use/Function	Operation/Condition/Compatibility
Q1	Pre-drive amplifier	Wide-band amplification of HF band.
Q2,3	Drive amplifier	Push-pull wide-band amplification of HF band.
Q4,5	Final amplifier	Push-pull wide-band amplification of HF band.
Q6	Supply of bias for drive	Temperature compensation of drive.
Q7	Supply of bias for final	Temperature compensation of final.
Q8	Constant-voltage power supply	5V for digital system.
Q9	Constant-voltage power supply	5V for PLL system.
D1	Temperature compensation	Temperature sensing of pre-drive.
D2	Temperature compensation	Temperature sensing of drive.
D3	Temperature compensation	Temperature sensing of final.
D4	Absorption of surge voltage	Relay for changing over HF and VHF of drive. **TS-680S only**
D5	Absorption of surge voltage	For fan motor.
D6	Protection of inverse connection	For power supply terminal.
D7	Constant-voltage power supply	Power supply of 8.2V for temperature sensor module.

FILTER UNIT (X51-3040-XX)

Component	Use/Function	Operation/Condition/Compatibility
Q1	Drive amplifier of 50MHz band	**TS-680S only**
Q2	Final amplifier of 50MHz band	**TS-680S only**
Q3	Switching of RAT	Grounds receiving antenna terminal when transmitting.
D1	Absorption of surge voltage of relay	For relay of 500kHZ~2.5MHz LPF.
D2	Absorption of surge voltage of relay	For relay of 2.5MHz~4.0MHz LPF.
D3	Absorption of surge voltage of relay	For relay of 4.0MHz~7.5MHz LPF.
D4	Absorption of surge voltage of relay	For relay of 7.5MHz~14.5MHz LPF.
D5	Absorption of surge voltage of relay	For relay of 14.5MHz~21.5MHz LPF.
D6	Absorption of surge voltage of relay	For relay of 21.5MHz~30MHz LPF.
D7	Absorption of surge voltage of relay	For relay of 50MHz~54MHz LPF. **TS-680S only**
D8	Absorption of surge voltage of relay	For changeover of TX and RX.
D9	Rectification of traveling wave	High-frequency rectification.
D10	Rectification of reflected wave	High-frequency rectification.
D11	Protection from lightning surge	Surge absorber of receiving antenna terminal.

FOR SERVICE MANUALS
CONTACT:
MAURITRON TECHNICAL SERVICES
www.mauritron.co.uk
TEL: 01844 - 351694
FAX: 01844 - 352554

DESCRIPTION OF COMPONENTS

CONTROL UNIT (X53-3100-XX)

VCO1-D mode is TS-680S only

Component	Use/Function	Operation/Condition/Compatibility
IC1	PLL3 (BFO PLL)	1,2,7: Frequency division ratio setting input. 3: 91MHz input (VCO3) in AM mode. 10: VCO lock voltage output. 11: UL line. "L" in UL mode. 15: 4.5MHz input (1/8 f_{STD}).
IC2	Frequency divider (1/20)	4: 91MHz input. 8: 4.55MHz output.
IC3	Frequency divider (1/10)	1: 4.55MHz input. 2: SFT line. Output is OFF when "H" is input. 12: 455kHz output.
IC4	PLL2 (VFO 10Hz step for covering 50kHz)	1,2,7: Frequency division ratio setting input. 3: 55~60MHz input (VCO2). 10: VCO lock voltage output. 11: UL line. "L" in UL mode. 15: 4.5MHz input (1/8 f_{STD}).
IC5	Frequency divider (1/10)	4: 55~60MHz input. 8: 5.5~6.0MHz output.
IC6	Mixer (MIX5)	1: 10.05~10.55MHz output. 2: 5.5~6.0MHz input. 5: 4.55MHz input.
IC7	Frequency divider (1/10)	1: 10.05~10.55MHz input. 12: 1.005~1.055MHz output.
IC8	Frequency divider (1/8)	8: 4.5MHz output (1/8 f_{STD}). 14: Input of reference frequency of 36MHz (f_{STD}).
IC9	Mixer (MIX4)	1: 5.505~5.555MHz output. 2: 1.005~1.055MHz input. 5: 4.5MHz output.
IC10	Mixer (MIX3)	1: 41.505~41.555MHz output. 2: 5.505~5.555MHz input. 5: 36MHz input.
IC11	Mixer (MIX2)	1: Output of 37.005~37.055MHz (in VCO1-A mode) or 77.505~77.555MHz (in VCO1-C,D mode). 2: 41.505~41.555MHz input. 5: Input of 4.5MHz (in VCO1-A mode) or 36MHz (in VCO1-C,D mode).
IC12	Mixer (MIX1)	3: Output of 3.55~13.5MHz (in VCO1-A mode) or 9.05~20.0MHz (in VCO1-B mode) or 15.95~7.5MHz (in VCO1-C mode) or 12.55~16.5MHz (in VCO1-D mode). 5: Input of 40.555~50.555MHz (in VCO1-A mode) or 50.555~61.555MHz (in VCO1-B mode) or 61.555~70.055MHz (in VCO1-C mode) or 90.055~94.055MHz (in VCO1-D mode). 11: Input of 37.005~37.055MHz (in VCO1-A mode) or 41.505~41.555MHz (in VCO1-B mode) or 77.505~77.555MHz (in VCO1-C mode).
IC13	PLL1 (VFO 50kHz step, last VCO)	1: 4.5MHz input (1/8 f_{STD}). 5: VCO lock voltage output. 7: UL line. "L" in UL mode. 8: Input of 3.55~13.5MHz (in VCO1-A mode) or 9.05~20.0MHz (in VCO1-B mode) or 15.95~7.5MHz (in VCO1-C mode) or 12.55~16.5MHz (in VCO1-D mode). 9,10,11: Frequency division ratio setting input. 13: Signal for 50kHz output marker.

FOR SERVICE MANUALS
CONTACT:
MAURITRON TECHNICAL SERVICES
www.mauritron.co.uk
TEL: 01844 - 351694
FAX: 01844 - 352554

DESCRIPTION OF COMPONENTS

Component	Use/Function	Operation/Condition/Compatibility
IC14	PLL4 (HET PLL)	1,2,7: Frequency division ratio setting input. 3: 39.6MHz input (VCO4). 10: VCO lock voltage output. 11: UL line. "L" in UL mode. 15: 4.5MHz input (1/8 fSTD).
IC15	System reset	Generates reset signal when source voltage rises or lowers to make timing of operation and backing up of microprocessor.
IC16	Inverter	1/6, 2/6: Beep tone oscillator. 3/6, 4/6: Shaping of system reset signal wave form. 5/6, 6/6: System clock oscillator (2.45MHz).
IC17	System clock oscillation	Generates interrupt signal for dynamic lighting of indicator lamp.
IC18	CPU	8-bit microprocessor, Z80 (See CIRCUIT DESCRIPTION).
IC19	Address decoder	Divides address signal of CPU and converts chip select signal of each IC and divides memory area of 64kbytes into 8kbytes x 8blocks.
IC20	Static RAM	Makes data such as VFO, memory, etc. for microprocessor. Area capacity: 2kbytes x 8bits. Backed up by system reset signal.
IC21	ROM	Cotrol program (including program for outside control) is built in. Area capacity: 16kbytes x 8bits.
IC22,23	I/O port	Bus interface I/O port. All are set by output ports. (See I/O PORT FUNCTIONS.)
IC24	I/O port	Bus interface I/O port. All are set by input ports. (See I/O PORT FUNCTIONS.)
IC25	Inverter	Absorbs chatterring of encoder.
IC26	Counter	Counts pulses of encoder. Two system of quadruplication (CK1,2) and duplication (CK3,4).
IC27	A/D converter	Converts analog voltage input to digital data and output it. 4: RIT. 5: IF shift. 6: Carrier point (LSB) compensation. 7: Carrier point (USB) compensation.
Q1	VCO3 (PLL3)	90.7~91.3MHz.
Q2	VCO3 buffer	
Q3,4	BFO buffer	453.5~456.5kHz.
Q5	VCO2 (PLL2)	55.0~60.0MHz.
Q6	VCO2 buffer	
Q7	MIX5 output amplifier	10.05~10.55MHz.
Q8	TTL input buffer	
Q9	Reference crystal oscillation (OSC)	36MHz (fSTD).
Q10	OSC buffer	
Q11	TTL input buffer	
Q12	MIX3 input buffer	36MHz
Q13	MIX1 input buffer	37.005~37.055MHz (VCO1-A mode) or 41.505~41.555MHz (VCO1-B mode) or 77.505~77.555MHz (VCO1-C,D mode).
Q14	VCO1 buffer	40.555~70.055MHz or 90.055~94.055MHz.
Q15	PLL IF signal amplification	2.5~22.5MHz.
Q16~18	PLL1 low-pass filter	Active (Reference frequency: 50kHz).
Q19~21	PLL4 low-pass filter	Active (Reference frequency: 5kHz or 25kHz).
Q22	VCO4 (PLL4)	39.6MHz.
Q23	VCO4 buffer	
Q24	HET buffer	
Q25,26	Shaping of UL signal wave form	Output is "L" in UL mode.

FOR SERVICE MANUALS
CONTACT:
MAURITRON TECHNICAL SERVICES
www.mauritron.co.uk
TEL: 01844 - 351694
FAX: 01844 - 352554

DESCRIPTION OF COMPONENTS

Component	Use/Function	Operation/Condition/Compatibility
Q27	BPF (PLL) buffer	MIX1 input of 37.005~37.055MHz in VCO1-A mode.
Q28	BPF (PLL) buffer	MIX1 input of 41.505~41.555MHz in VCO1-B mode.
Q29	BPF (PLL) buffer	MIX1 input of 77.505~77.555MHz in VCO1-C,D mode.
Q30	Outside interrupt control	Transfers to program for outside control of personal computer.
Q31	RAM backup control	Transfers to backup mode of RAM when power is OFF.
Q32	BPF (PLL) buffer	Active is "H" in VCO1-C,D mode.
Q33	BPF (PLL) buffer and VCO1-B buffer	Active is "H" in VCO1-B mode.
Q34	BPF (PLL) buffer and VCO1-A buffer	Active is "H" in VCO1-A mode.
Q35	TONE UNIT signal buffer	Active is "H" in FM transmission mode of split memory CH.
Q36	SSB mode signal buffer	Active is "H" in SSB mode.
Q37	CW mode signal buffer	Active is "H" in CW mode (including CWN mode).
Q38	AM mode signal buffer	Active is "H" in AM mode.
Q39	FM mode signal buffer	Active is "H" in FM mode.
Q40	CWN mode signal buffer	Active is "H" in CWN mode.
Q41	MSCR LED driver	Drives LED when momory is scrolling.
Q42	F.LOCK LED driver	Drives LED in F.LOCK mode.
Q43	1MHz LED driver	Drives LED in 1MHz mode.
D1	VCO3 varicap	Frequency variable.
D2,3	VCO2 varicap	Frequency variable.
D4,5	BPF changeover switch	ON in VCO1-B mode.
D6	BPF changeover switch	ON in VCO1-A,C,D mode.
D7,8	Wired OR	"H" in VCO1-A,C,D mode.
D9,10	LPF changeover switch	ON in VCO1-C,D mode.
D11	LPF changeover switch	ON in VCO1-A mode.
D12,13	BPF changeover switch	ON in VCO1-C,D mode.
D14,15	BPF changeover switch	On in VCO1-A mode.
D16	Wired OR	Composition of PLL1, UL signal.
D17	VCO4 varicap	Frequency variable.
D18	Beep switch	Beep oscillator is turned ON/OFF by beep pulse. Active is "H".
D19,20	Composition of ROM chip select	Makes 2 blocks of select signal of 8kbytes and use them as ROM select signal of 16kbytes.
D21,23,24	Power supply changeover switch	Changes power supply in RAM backup mode.
D22	Stabilization of voltage	For Lithium battery.
D25~27	Prevention of reverse current	
D29,31	Extended function switch	

FOR SERVICE MANUALS
CONTACT:
MAURITRON TECHNICAL SERVICES
www.mauritron.co.uk
TEL: 01844 - 351694
FAX: 01844 - 352554

DESCRIPTION OF COMPONENTS

DISPLAY UNIT (X54-3050-XX)

Component	Use/Function	Operation/Condition/Compatibility
IC1	Serial input-type high-voltage fluorescent indicator lamp	Converts serial indication data from CONTROL UNIT in parallel and turns on fluorescent indicator lamp.
Q1	Fluorescent indicator lamp driver	
D1	Switching	F.LOCK
D2	Switching	M ▶ V
D3	Switching	M.IN
D4	Switching	DOWN
D5	Switching	VFO/M
D6	Switching	SCAN
D7	Switching	CLEAR
D8	Switching	UP
D9	Switching	USB/LSB
D10	Switching	CW (N/W)
D11	Switching	FM/AM
D12	Switching	1MHz
D13	Switching	A/B
D14	Switching	SPLIT
D15	Switching	A=B
D16	Switching	RIT
D17	Generation of filament bias voltage	Generates bias for filament of fluorescent indicator lamp.
D18	Indication	Turns on red lamp in transmission mode.
D19	Indication	Turns on yellow lamp when M.SCR is ON.
D20	Indication	Turns on green lamp when F.LOCK is ON.
D21	Indication	Turns on green lamp when 1MHz is ON.

SIGNAL UNIT (X57-3190-00: TS-680S) (X57-3200-XX: TS-140S)

Component	Use/Function	Operation/Condition/Compatibility
IC1	Band data driver	13.8V output.
IC2	Decoding of band data	Open collector. Active is "L".
IC3	RX: Product detection, TX: BM	455kHz↔AF.
IC4	Audio power amplifier	
IC5	TX 1st mixer	455kHz→40.055MHz.
IC6	FM IF amplifier, detection, squelch	
IC7 (1/4)	DC switch	Turned ON in TX mode.
IC7 (2/4)	AF signal switch	Turned ON in SSB and CW mode.
IC7 (3/4)	AF signal switch	Turned ON in FM mode.
IC7 (4/4)	AF signal switch	Turned ON in AM mode.
IC8 (1/4)	AGC time constant switch	Turned ON in AM mode.
IC8 (2/4)	AGC time constant switch	Turned ON in AGC and SLOW mode.
IC8 (3/4)	Changeover switch of meter	Turned ON in TX/ALC mode.
IC8 (4/4)	Changeover switch of meter	Turned ON in TX/PWR mode.
IC9 (1/4)	S-meter sensitivity switch	Turned ON in 50MHz band mode.
IC9 (2/4)	S-meter sensitivity switch	Turned ON in HF mode.
IC9 (3/4)	Changeover switch of meter	Turned ON in RX mode.
IC9 (4/4)	S-meter sensitivity switch	Turned ON in FM mode.
IC10 (1/4)	ALC level switch	Turned ON in AM and CW mode.
IC10 (2/4)	ALC level switch	Turned ON in SSB mode.
IC10 (3/4)	ALC level switch	Turned ON in power-down mode.
IC10 (4/4)	ALC level switch	Turned ON in mode other than power-down mode.
IC11 (1/4)	ALC amplifier	
IC11 (2/4)	Reflected wave voltage amplifier	
IC11 (3/4)	Detected output amplifier	Amplifies voltage of traveling wave and reflected wave.
IC11 (4/4)	Power meter amplifier	
IC12	8V AVR	

FOR SERVICE MANUALS
CONTACT:
MAURITRON TECHNICAL SERVICES
www.mauritron.co.uk
TEL: 01844 - 351694
FAX: 01844 - 352554

DESCRIPTION OF COMPONENTS

Component	Use/Function	Operation/Condition/Compatibility
Q1	13.8V line switching	Turned ON in 2MHz band mode.
Q2	13.8V line switching	Turned ON in 50MHz band mode. **TS-680S only**
Q3,4	Switching	Turned "L" in 50MHz band mode. **TS-680S only**
Q5	8V line switching	Turned ON in 50~54MHz mode. **TS-680S only**
Q6	8V line switching	Turned ON in 21.5~30.0MHz mode.
Q7	8V line switching	Turned ON in 10.5~21.5MHz mode.
Q8	8V line switching	Turned ON in 0.5~10.5MHz mode.
Q9~11	VCO	Q9: 0.5~10.5MHz Q10: 10.5~21.5MHz Q11: 21.5~30.0MHz
Q12	VCO	50.0~54.0MHz. **TS-680S only**
Q13,14	VCO output buffer	
Q15	VCO output amplifier	
Q16,17	Switching	Reduces noise when RF AMP and ATT are turned ON/OFF.
Q18,19	RX 1st mixer	Receiving frequency→40.055MHz.
20	13.8V line switching	Turned ON in RX mode.
Q21	Post amplifier	40.055MHz.
Q22,23	RX 2nd mixer	40.055MHz→455kHz.
Q27	IF amplifier	455kHz.
Q28,29	Switching	Shunt IF circuit when NB pulse is generated.
Q30,31	IF amplifier	455kHz.
Q32,34	8V line switching	Turned ON in CW mode (excluding CWN).
Q35~39	8V line switching	Q35: SSB Q36: AM Q37: FM Q38: CW Q39: CWN
Q40,41	Switching	Shunt of TX circuit in RX mode.
Q42	Switching	Shunt of RX circuit in TX mode.
Q43	8V line switching	Generates RB.
Q44	8V line switching	Generates AMT and SST.
Q45~47	NB amplifier	455kHz.
Q48	NB buffer	
Q49	NB AGC amplifier	
Q50	Switching	Set to "L" when NB pulse is generated in NB2.
Q51	Switching	Set to "L" when NB pulse is generated in NB1.
Q52	Switching	Set to "L" when SKB pulse is generated.
Q53	IF buffer	AGC, AM.
Q54	AF buffer	AM.
Q55	Switching	Set to "L" in TX mode.
Q56	AF amplifier	
Q57	Switching	Set to "L" in MUT and TX mode.
Q58	AF amplifier	FM.
Q59	AGC amplifier	
Q60	Generation of S-meter voltage.	
Q61	S-meter amplifier	
Q62	Switching	Prevents S-meter from over-reading when power is turned ON.
Q63	Switching	Generates HF voltage. **TS-680S only**
Q64	Switching	Generates 50MHz band voltage. **TS-680S only**
Q65,66	Switching	Sets AGC time constant in mode other than FM mode.
Q67	Switching	Invalidates changeover of FAST/SLOW of AGC in FM mode.
Q68	Generation of ALC meter voltage	
Q69	ALC meter amplifier	
Q70	RF amplifier	28MHz band. **TS-680S only**
Q71	Buffer	28MHz band. **TS-680S only**
Q72	RF amplifier	50MHz band. **TS-680S only**
Q73	Buffer	50MHz band. **TS-680S only**

DESCRIPTION OF COMPONENTS

Component	Use/Function	Operation/Condition/Compatibility
Q74	TX AF amplifier	
Q75	Switching	Shunt of FMM in RX mode.
Q76	8V line switching	Turned ON in TOC (Tone transmission) mode.
Q77	Switching	Generates RXB. Set to "L" in TX mode.
Q78	HET amplifier	39.6MHz.
Q79,80	TX 2nd mixer	40.055MHz (39.6MHz in FM mode)→Transmission frequency.
Q81	RF amplifier	
Q82	8V line switching	Turned ON in FM/TX mode.
Q83,85	13.8V line switching	Turned ON in 50MHz band. **TS-680S only**
Q84	Switching	Connects KEY line in CW mode.
Q86	TX IF amplifier	455kHz.
Q87	8V line switching	Turned ON in TX mode. Generates KEYING timing.
Q88	8V line switching	Turned ON in FM, CW and TX mode.
Q89	AF amplifier	Output to RX packet terminal.
Q90,91	Switching	Generates SS and CSS.
Q92	Switching	Set to "L" in power-down mode.
Q93	Switching	Set to "L" in mode other than power-down mode.
Q94	Switching	Set to "L" in HF mode. **TS-680S only**
Q95	Switching	Set to "L" in 50MHz mode. **TS-680S only**
Q96	Switching	Set to "L" in SSB and FM mode.
Q97	Switching	Generates squelch signal for packet.
Q98	Switching	Generates NFT.
Q99	Switching	Connects SEM line in CW mode.
D1~3	Switching	Changeover of BPF.
D5,6,9,10	Protection from lightning surge.	
D7,8,11~20	Switching	Changeover of BPF.
D21,22	Switching	Changeover of BPF. **TS-680S only**
D23	Absorption of surge voltage of relay	For attenuator relay.
D24	Prevention of reverse current	Information on 28F 28MHz band and 50F 50MHz band. **TS-680S only**
D25	Absorption of surge voltage of relay	For RF AMP changeover relay. **TS-680S only**
D26~29	Prevention of reverse current	Decodes band information.
D30	Voltage shift	
D31	Prevention of reverse current	Decodes band information. **TS-680S only**
D33	Prevention of reverse current	
D34,35	Change of VCO frequency	0.5~10.5MHz.
D36,37	Change of VCO frequency	10.5~21.5MHz.
D38	VCO switching	For 10.5~21.5MHz.
D39,40	Change of VCO frequency	21.5~30.0MHz.
D41	VCO switching	For 21.5~30.0MHz.
D42,43	Change of VCO frequency	50.0~54.0MHz. **TS-680S only**
D44	VCO switching	For 50.0~54.0MHz. **TS-680S only**
D45	Switching	For TX mixer of VCO output.
D46	Switching	For RX mixer of VCO output.
D47	Attenuator	For CAR level.
D48	Prevention of reverse current	RXB+SSB.
D49	Prevention of reverse current	
D50,53	Switching	Receiving 1st IF MCF circuit.
D51,52	Switching	Transmission 2nd IF MCF circuit.
D54	Switching	Receiving 2nd IF circuit.
D55	Switching	Transmission 1st IF circuit.
D56,57,60~63	Switching	Selects 455kHz filter.
D58,59	Prevention of reverse current	SSB+CW wide.
D64	Switching	Transmission 1st IF curcuit.

FOR SERVICE MANUALS
CONTACT:
MAURITRON TECHNICAL SERVICES
www.mauritron.co.uk
TEL: 01844 - 351694
FAX: 01844 - 352554

DESCRIPTION OF COMPONENTS

Component	Use/Function	Operation/Condition/Compatibility
D65	Switching	Receiving 2nd IF circuit.
D66	Switching	RB line.
D67	Switching	SS line.
D68	Prevention of reverse current	SSB+AMB.
D69	Prevention of reverse current	SSB+CWB.
D70	Prevention of reverse current	MUT+RB.
D71	Noise detection	FM squelch circuit.
D72	Switching	FM 2nd IF circuit.
D73,74	AGC detection	
D75	AM detection	
D76	Prevention of reverse current	TXB.
D77	Prevention of reverse current	FMB+CWB.
D78	Temperature compensation	S-meter curcuit.
D79	Prevention of reverse current	50W+PPD.
D80	Prevention of reverse current	PD+FMB.
D81	Prevention of reverse current	AMB+CWB.
D82	Prevention of reverse current	VSF.
D83	Prevention of reverse current	ALC.
D85	Prevention of reverse current	Protection.
D86	Noise detection	NB1.
D87	Noise detection	NB2.
D88	Voltage shift	SBK.
D89	Prevention of reverse current	CWB+FMB.
D90	Absorption of surge voltage of relay	For remote control relay.
D91,92	Voltage shift	Outside ALC.
D93	Voltage shift	For DELAY TIME module VCC.
D95	Prevention of reverse current	
D96	Switching	HET amplifier input.
D97,98	Prevention of reverse current	RXB+NFT+ALC.
D99	Switching	Receiving HET output.
D100	Switching	Transmission HET output.
D101,102	Switching	FM transmission IF output.
D103~106	Switching	Changeover of transmission BPF.
D107	Prevention of reverse current	RXB+NFT.
D108	Prevention of reverse current	CWB.
D109,110	Switching	CAR TIF input circuit.
D111	Temperature compensation	TIF amplifier.
D112	Prevention of reverse current	RB.
D113	Prevention of reverse current	Power supply circuit for keying.
D114	Prevention of reverse current	KEY.
D115	Prevention of reverse current	PC1.
D116	Stabilization of voltage	For ALC amplifier.
D117	Prevention of reverse current	Unbalancing circuit of AM carrier.
D118	VCO switching	For 0.5~105MHz.
D119	Prevention of reverse current	SSB+FMB.
D120	Prevention of reverse current	For IC8 VCC.
D122	Switching	CAR TIF input circuit.
D123	Prevention of reverse current	CWB.
D124	Switching	FM transmission IF output.
D125	Voltage shift	Protection circuit.
D126	Switching	Transmission output in mode other than FM mode.
D501	Isolator	CWB.
D502	Isolator	VOX line.
D503	Voltage shift	VOX line.

DESCRIPTION OF COMPONENTS

SIDE TONE UNIT (X59-1060-00)

Component	Use/Function	Operation/Condition/Compatibility
Q1	SIDE TONE oscillation	800Hz.
D1	Switching	Turned ON when KEY DOWN.
D2	Prevention of reverse current	
D3	Temperature compensation	

VOX UNIT (X59-1080-00)

Component	Use/Function	Operation/Condition/Compatibility
IC1 (1/2)	Comparison of VOX level	
IC1 (2/2)	Comparison of ANTI VOX level	
IC2	NOR circuit (RS flip-flop)	
Q1	Switching transistor	Q1 is ON when IC2/11pin is "H"
D1,2	Prevention of reverse current	

FM MIC AMP UNIT (X59-3000-02)

Component	Use/Function	Operation/Condition/Compatibility
IC1 (1/2)	Low-pass filter	1,2: Output
IC1 (2/2)	Limitting amplifier	6: Input 7: Output
Q1	SUB TONE	

TRX UNIT (X59-3340-00)

Component	Use/Function	Operation/Condition/Compatibility
Q1~5	Switching transitor	Q3,5 are ON in receiving mode, and Q1,2,4 are ON in transmission mode.
D1,2	Switching	

NB2 UNIT (X59-3350-00)

Component	Use/Function	Operation/Condition/Compatibility
IC1	One-shot multi vibrator	Syncronized to pulse, with width of 1/4,4/4: 5mS and 2/4,3/4: 40mS.
Q1	Switching transistor	Turned ON when pulse is 15mS.
Q2	Switching transistor	Turned OFF when pulse is 40mS.

DELAY TIME UNIT (X59-3360-00)

Component	Use/Function	Operation/Condition/Compatibility
IC1	One-shot multi vibrator	
Q1,2,6	Switching transistor	Turned ON when CW KEY DOWN.
Q3~5,7	Switching transistor	Turned OFF when CW KEY DOWN.
D1	Prevention of reverse current	

FAN UNIT (X59-3370-00)

Component	Use/Function	Operation/Condition/Compatibility
IC1	Temperature detection	1/2: Power down 2/2: Fan motor operation
Q1	Switching transistor	

FOR SERVICE MANUALS
CONTACT:
MAURITRON TECHNICAL SERVICES
www.mauritron.co.uk
TEL: 01844 - 351694
FAX: 01844 - 352554

PARTS LIST

CAPACITORS CC 45 TH 1H 220 J
1 2 3 4 5 6

1 = Type ..... ceramic, electrolytic, etc.
2 = Shape .....round, square, etc.
3 = Temp. coefficient
4 = Voltage rating
5 = Value
6 = Tolerance

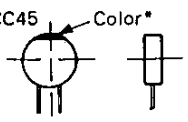

- **Capacitor value**

0 1 0 = 1pF
1 0 0 = 10pF
1 0 1 = 100pF
1 0 2 = 1000pF = 0.001μF
1 0 3 = 0.01μF

2 2 0 = 22pF
1st number | Multiplier
2nd number

- **Temperature Coefficient**

1st Word	C	L	P	R	S	T	U
Color*	Black	Red	Orange	Yellow	Green	Blue	Violet
ppm/°C	0	−80	−150	−220	−330	−470	−750

2nd Word	G	H	J	K	L
ppm/°C	± 30	± 60	± 120	± 250	± 500

Example CC45TH = −470 ± 60 ppm/°C

- **Tolerance**

Code	C	D	G	J	K	M	X	Z	P	No code
(%)	± 0.25	± 0.5	± 2	± 5	± 10	± 20	+ 40 −20	+ 80 −20	+ 100 −0	More than 10μF −10~ + 50 / Less than 4.7μF −10~ + 75

Code	B	C	D	F	G
(pF)	± 0.1	± 0.25	± 0.5	± 1	± 2

Less than 10 pF

- **Rating voltage**

1st word \ 2nd word	A	B	C	D	E	F	G	H	J	K	V
0	1.0	1.25	1.6	2.0	2.5	3.15	4.0	5.0	6.3	8.0	–
1	10	12.5	16	20	25	31.5	40	50	63	80	35
2	100	125	160	200	250	315	400	500	630	800	–
3	1000	1250	1600	2000	2500	3150	4000	5000	6300	8000	–

- **Chip capacitors**

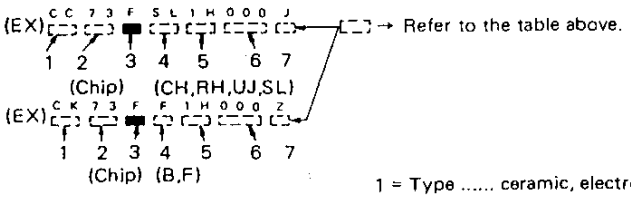

Dimension

Dimension code	L	W	T
Empty	5.6 ± 0.5	5.0 ± 0.5	Less than 2.0
E	3.2 ± 0.2	1.6 ± 0.2	Less than 1.25
F	2.0 ± 0.3	1.25 ± 0.2	Less than 1.25

Dimension

Dimension code	L	W	T	Wattage
E	3.2 ± 0.2	1.6 ± 0.2	0.57	2B
F	2.0 ± 0.3	1.25 ± 0.2	0.45	2A

Rating wattage

Cord	Wattage	Cord	Wattage	Cord	Wattage
2A	1 /10W	2E	1/ 4W	3A	1W
2B	1/ 8W	2H	1/ 2W	3D	2W
2C	1/ 6W				

Dimension

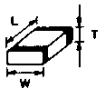

RESISTORS

- **Chip resistor (Carbon)**

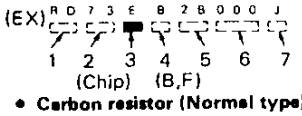

1 = Type ..... ceramic, electrolytic, etc.
2 = Shape ..... round, square, etc.
3 = Dimension
4 = Temp. coefficient
5 = Voltage rating
6 = Value
7 = Tolerance.

- **Carbon resistor (Normal type)**

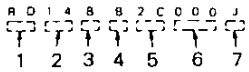

FOR SERVICE MANUALS
CONTACT:
MAURITRON TECHNICAL SERVICES
www.mauritron.co.uk
TEL: 01844 - 351694
FAX: 01844 - 352554

PARTS LIST

* New Parts
Parts without Parts No. are not supplied.
Les articles non mentionnes dans le Parts No. ne sont pas fournis.
Telle ohne Parts No. werden nicht geliefert.

Ref. No. 参照番号	Address 位置	New Parts 新	Parts No. 部品番号	Description 部品名／規格	Destination 仕向	Remarks 備考
			TS-140S/680S			
1	1B	*	A01-1032-02	CASE (UPPER)		
2	3B	*	A01-1033-02	CASE (LOWER)		
3	2F	*	A10-1286-01	CHASSIS		
4	3C	*	A11-0404-01	SUB CHASSIS		
5	2G	*	A20-2622-03	PANEL ASSY		B
5	2G	*	A20-2638-03	PANEL ASSY		A
6	1H	*	A22-0753-02	SUB PANEL		
7	2F	*	A23-1498-13	REAR PANEL		
8	1H	*	A33-0408-04	REFLECTOR		
13	2H	*	B01-0660-03	PANEL ESCUTCHEON ASSY		
14	2G	*	B10-1101-03	FRONT GLASS		B
14	2G	*	B10-1102-03	FRONT GLASS		A
15	2H	*	B11-0447-04	OPTICAL FIBER ASSY		
17	2H	*	B11-0450-04	FILTER		
18	1J		B30-0817-15	PILOT LAMP (14V,80MA)		
19	1H	*	B31-0661-05	METER		
22	1K		B46-0410-20	WARRANTY CARD	K	
23	1K	*	B50-8199-20	INSTRUCTION MANUAL		
-		*	B01-0659-03	ESCUTCHEON		
-		*	B40-3702-04	MODEL NAME PLATE	MTW	
-		*	B40-3799-04	MODEL NAME PLATE		B
-		*	B40-3339-04	MODEL NAME PLATE	K	
C1			CK45F1H1032	CERAMIC 0.01UF Z		
30	2D		E04-0167-05	RF COAXIAL CABLE RECEPTACLE		
31	1J		E07-0751-05	7P DIN PLUG (ACSY)		
32	1J		E30-2065-05	DC POWER CORD ASSY (ACSY)		
33	1J		E31-2154-05	CONNECTING WIRE(CAL)ACSY		
34	1J		E07-1351-05	13P PLUG (ACSY)		
-			E07-0852-15	8P METAL PLUG (MIC)	KM	
-		*	E31-3297-05	FLEXIBLE CABLE		
-		*	E31-3298-05	FLEXIBLE CABLE		
-		*	E31-3299-05	FLEXIBLE CABLE		
-		*	E31-3300-05	FLEXIBLE CABLE		
38	1J		F05-2036-05	FUSE (20A)		
40	1E	*	F11-1069-02	SHIELDING COVER		
41	1F	*	F11-1088-04	SHIELDING COVER(SIGNAL UNIT)		
-			F11-0818-24	SHIELDING COVER		
-		*	F19-0657-04	BLIND PLATE (REAR PANEL)		B
-			F20-0521-04	INSULATING SHEET(LITHUM BATT)		
47	2G		G02-0505-05	KNOB FIXED SPRING		
48	1C,1J	*	G02-0578-04	LEAF SPRING		
49	3C		G10-0610-04	FELT		
50	1A,2H	*	G10-0656-04	FELT (SP)		
51	2H	*	G10-0660-04	FELT (PANEL)		
52	2E	*	G10-0668-04	FELT (SIGNAL UNIT)		
53	2E		G10-0633-04	FELT (CHASSIS SIDE)		
54	1A		G13-0684-04	CUSHION (SUB CHASSIS)		
55	2G		G13-0831-04	CUSHION (SIGNAL UNIT)		
56	2G	*	G13-0848-04	CUSHION (KNOB)		
57	2G,2H	*	G13-0849-04	CUSHION (KNOB)		
58	2H	*	G13-0850-04	CUSHION (KNOB)		

E: Scandinavia & Europe K: USA P: Canada
U: PX(Far East, Hawaii) T: England M: Other Areas
UE: AAFES(Europe) X: Australia

A : TS-140S (K,M,T,W)
B : TS-680S (K)

⚠ indicates safety critical components.

PARTS LIST

* New Parts
Parts without Parts No. are not supplied.
Les articles non mentionnes dans le Parts No. ne sont pas fournis.
Teile ohne Parts No. werden nicht geliefert.

Ref. No. 参照番号	Address 位置	New Parts 新	Parts No. 部品番号	Description 部品名／規格	Destination 仕向	Remarks 備考
59	2H	*	G13-0863-04	CUSHION (ESCUTCHEON)		
60	1I	*	G13-0864-04	CUSHION (REFLECTOR)		
62	1A,1B		G53-0509-04	PACKING (CASE SIDE)		
--			G02-0565-04	FLAT SPRING		
--			G11-0609-04	CUSHION (MIC)	KM	
--			G13-0656-04	CUSHION (FLEXIBLE CABLE)		
--			G13-0855-04	CUSHION (MIC)		
--		*	G13-0885-04	CUSHION (FLEXIBLE CABLE)		
--		*	G13-0891-04	CUSHION	W	
66	3K	*	H01-8146-04	CARTON BOX		A
66	3K	*	H01-8165-04	CARTON BOX		B
68	2J	*	H10-2633-02	PACKING FIXTURE(FRONT)		
69	2K	*	H10-2634-02	PACKING FIXTURE(REAR)		
70	2J		H12-1315-04	CUSHION		
71	2J	*	H12-1405-04	CUSHION (FRONT)		
72	2K		H20-1410-03	PROTECTIVE COVER		
73	1J		H25-0112-04	PROTECTIVE BAG (DC CORD)		
74	1J		H25-0079-04	PROTECTIVE BAG (MIC)	KM	
77	3B		J02-0323-05	FOOT (REAR)		
78	3A		J02-0440-04	ASSISTANT FOOT		
79	1A,3A		J02-0441-05	FOOT (SMALL TYPE)		
80	3A,3B		J02-0442-04	FOOT (FOOT)		
82	1I,2I		J21-2664-14	MOUNTING HARDWARE(SW)		
83	3A		J21-4208-04	MOUNTING HARDWARE(ASSIST FOOT)		
84	1H		J31-0141-04	SPACER RING (MIC)		
85	1H		J32-0792-04	HEX BOSS		
86	2F		J42-0442-05	HOLE BUSHING		
87	2A	*	J50-0401-05	HINGE		
88	3C	*	J50-0402-05	HINGE		
--			J13-0404-05	FUSE HOLDER(DC POWER CORD ASSY		
--			J61-0307-05	WIRE BAND		
92	1B		K01-0407-05	CARRING HANDLE		
93	2G		K21-0778-02	MAIN KNOB		
94	2G		K23-0710-04	KNOB (INSIDE)		
95	2G		K29-0741-34	KNOB (OUTSIDE)		
96	1H		K29-0758-14	PUSH KNOB (POWER SW)		
97	2G	*	K29-3078-04	KNOB (CW SW)		
98	2G	*	K29-3079-04	KNOB (PWR,MIC,RFGIN,NB LEVEL)		
99	2G	*	K29-3080-14	KNOB (M.CH)		
100	2G	*	K29-3081-04	KNOB (A/B)		
101	2G	*	K29-3082-04	KNOB (SPLIT)		
102	2G	*	K29-3083-04	KNOB (A=B)		
103	2G	*	K29-3084-04	KNOB (LSB/USB)		
104	2G	*	K29-3085-04	KNOB (CW/N)		
105	2G	*	K29-3086-04	KNOB (AM/FM)		
106	2G	*	K29-3087-04	KNOB (CLEAR)		
107	2G	*	K29-3088-04	KNOB (SCAN)		
108	2G	*	K29-3089-04	KNOB (VFO/M)		
109	2G	*	K29-3090-04	KNOB (F.LOCK)		
110	2G	*	K29-3091-04	KNOB (M-V)		
111	2G	*	K29-3092-04	KNOB (M.IN)		
112	2G	*	K29-3093-04	KNOB (BAND)		
113	2H	*	K29-3094-04	KNOB (NB ETC)		

E: Scandinavia & Europe K: USA P: Canada
U: PX(Far East, Hawaii) T: England M: Other Areas
UE: AAFES(Europe) X: Australia

A : TS-140S (K,M,T,W)
B : TS-680S (K)

⚠ indicates safety critical components.

PARTS LIST

× New Parts
Parts without Parts No. are not supplied.
Les articles non mentionnes dans le Parts No. ne sont pas fournis.
Teile ohne Parts No. werden nicht geliefert.

Ref. No. 参照番号	Address 位置	New Parts 新	Parts No. 部品番号	Description 部品名／規格	Destination 仕向	Remarks 備考
120	3C		N15-1040-46	FLAT WASHER		
121	2G		N19-0637-04	FLAT WASHER (MAIN KNAB)		
A	2H		N09-0256-05	GND SCREW (SUB PANEL)		
B	3D		N09-0372-04	SCREW (PULLEY)		
C	1F		N88-2608-46	FLAT HEAD TAPTITE SCREW		
D	2G,2H		N09-0644-14	BIND SCREW (FRONT GLASS)		
E	2F		N30-2606-41	PAN HEAD MACHINE SCREW		
F	3C		N30-4014-41	PAN HEAD MACHINE SCREW (GND)		
G	2G,1I		N32-2606-46	FLAT HEAD MACHINE SCREW		
H	2A		N32-3006-46	FLAT HEAD MACHINE SCREW		
I	3C		N09-0623-04	SEMUS SCREW (50MHZ MODULE)		B
J	1A,1B		N33-3006-41	OVAL HEAD MACHINE SCREW(CASE)		
K	3E,2C		N87-2606-46	BRAZIER HEAD TAPTITE SCREW		
L	2F		N87-3006-41	BRAZIER HEAD TAPTITE SCREW		
M	2A,1C		N87-3006-46	BRAZIER HEAD TAPTITE SCREW		
N	3A		N87-3008-41	BRAZIER HEAD TAPTITE SCREW		
O	2A		N88-3006-46	FLAT HEAD TAPTITE SCREW		
P	2D		N87-3010-41	BRAZIER HEAD TAPTITE SCREW(ANT		
R	2G		N90-2606-46	TP HEAD MACHINE SCREW		
R1			RS14AB3A560J	FL-PROOF RS 56 J 1W		
J29	1H		S40-2437-15	PUSH SWITCH (POWER)		
-			S50-1406-05	SENSITIVE SWITCH(MICROPHONE)	KM	
J33	3C	*	T07-0252-05	SPEAKER		
J34	1J		T91-0352-15	MICROPHONE	KM	
J37	1I	*	W02-0802-05	ENCODER ASSU		
J38	3F	*	W09-0515-05	LITHIUM BATTERY		
J42	1I,1H	*	X41-3030-00	SWITCH UNIT		B
J42	1I,1H	*	X41-3030-11	SWITCH UNIT		A
J44	1C	*	X45-3100-00	FINAL UNIT		B
J44	1C	*	X45-3100-11	FINAL UNIT		A
J45	2C,1F	*	X51-3040-00	FILTER UNIT		B
J45	2C,1F	*	X51-3040-11	FILTER UNIT		A
J46	3F	*	X53-3100-11	CONTROL UNIT		A
J46	3F	*	X53-3100-12	CONTROL UNIT		B
J47	1I	*	X54-3050-00	DISPLAY UNIT	KMT	
J47	1I	*	X54-3050-61	DISPLAY UNIT	W	
J48	2E	*	X57-3190-00	SIGNAL UNIT		B
J48	2E	*	X57-3200-10	SIGNAL UNIT	KMT	
J48	2E	*	X57-3200-61	SIGNAL UNIT	W	
SWITCH UNIT (X41-3030-XX) -00 : TS-680S -11 : TS-140S						
C1,2			CK41FY1E102M	CYLND CHIP C 1000PF M		
C3			CC41FSL1H101J	CYLND CHIP C 100PF J		
C4			CE04EW1H010M	ELECTRO 1.0UF 50WV		
C5,6			CC41FSL1H101J	CYLND CHIP C 100PF J		
C7			CK41FY1E222M	CYLND CHIP C 2200PF M		
C8			CE04EW1H4R7M	ELECTRO 4.7UF 50WV		
C9			CE04EW1A470M	ELECTRO 47UF 10WV		
C10,11			CE04EW1H010M	ELECTRO 1.0UF 50WV		
C12			CE04EW1H100M	ELECTRO 10UF 50WV		
C13			CE04EW1A470M	ELECTRO 47UF 10WV		
C14			CE04EW1H4R7M	ELECTRO 4.7UF 50WV		
C15			CC41FSL1H101J	CYLND CHIP C 100PF J		A

FOR SERVICE MANUALS
CONTACT:
MAURITRON TECHNICAL SERVICES
www.mauritron.co.uk
TEL: 01844 - 351694
FAX: 01844 - 352554

E: Scandinavia & Europe K: USA P: Canada
U: PX(Far East, Hawaii) T: England M: Other Areas
UE: AAFES(Europe) X: Australia

A : TS-140S (K,M,T,W)
B : TS-680S (K)

⚠ indicates safety critical components.

PARTS LIST

* New Parts
Parts without Parts No. are not supplied.
Les articles non mentionnes dans le Parts No. ne sont pas fournis.
Telle ohne Parts No. werden nicht geliefert.

Ref. No. 参照番号	Address 位置	New Parts 新	Parts No. 部品番号	Description 部品名／規格	Destination 仕向	Remarks 備考
C16 ,17			CE04EW1H010M	ELECTRO 1.0UF 50WV		A
C18			CE04EW1H100M	ELECTRO 10UF 50WV		A
C19			CE04EW1A470M	ELECTRO 47UF 10WV		A
CN1			E40-3241-05	PIN CONNECTOR (6P)		
CN2			E40-3237-05	PIN CONNECTOR (2P)		
CN3			E40-3239-05	PIN CONNECTOR (4P)		
CN4			E40-3237-05	PIN CONNECTOR (2P)		A
CN5			E40-3239-05	PIN CONNECTOR (4P)		
CN6		*	E31-3307-05	CONNECTING WIRE(AF,SQ)		
CN7		*	E31-3306-05	CONNECTING WIRE(RIT,IF SHIFT)		
CN8			E40-3247-05	PIN CONNECTOR (3P)		
J1	1H		E11-0413-05	PHONE JACK		
R1 -3			RD41FB2B103J	CYLND CHIP R 10K J 1/8W		
R4			RD41FB2B102J	CYLND CHIP R 1.0K J 1/8W		
R5			RD41FB2B821J	CYLND CHIP R 820 J 1/8W		
R6			RD41FB2B101J	CYLND CHIP R 100 J 1/8W		
R7			RD41FB2B223J	CYLND CHIP R 22K J 1/8W		
R8 ,9			RD41FB2B101J	CYLND CHIP R 100 J 1/8W		
R10			RD41FB2B822J	CYLND CHIP R 8.2K J 1/8W		
R11			RD41FB2B823J	CYLND CHIP R 82K J 1/8W		
R12 ,13			RD41FB2B472J	CYLND CHIP R 4.7K J 1/8W		
R14			RD41FB2B332J	CYLND CHIP R 3.3K J 1/8W		
R15			RD41FB2B101J	CYLND CHIP R 100 J 1/8W		
R16			RD41FB2B221J	CYLND CHIP R 220 J 1/8W		
R17			RD41FB2B102J	CYLND CHIP R 1.0K J 1/8W		
R18			RD41FB2B101J	CYLND CHIP R 100 J 1/8W		A
R19			RD41FB2B562J	CYLND CHIP R 5.6K J 1/8W		A
R20			RD41FB2B104J	CYLND CHIP R 100K J 1/8W		A
R21			RD41FB2B103J	CYLND CHIP R 10K J 1/8W		A
R22			RD41FB2B223J	CYLND CHIP R 22K J 1/8W		A
R23			RD41FB2B102J	CYLND CHIP R 1.0K J 1/8W		A
VR1			R12-3127-05	TRIMMING POT. (10K)		
VR2	2I	*	R19-9411-05	POTENTIOMETER (AF,SQL)		
VR3	1I	*	R19-3424-05	POTENTIOMETER (RIT,IF SHIFT)		
W1 -11			R92-0670-05	CHIP R 0 OHM		
D1			1N60	DIODE		
D2 ,3			RLS73	CHIP DIODE		
IC1			UPC1158H2	IC(ALC AMP)		
Q1 -3			DTC114EK	DIGITAL TRANSISTOR		
Q4			2SA1162(Y)	TRANSISTOR		
Q5 ,6			2SC2712(Y)	TRANSISTOR		
Q6			2SC2712(Y)	CHIP TEANSISTOR		A
FINAL UNIT (X45-3100-XX) -00 : TS-680S -11 : TS-140S						
C1			CK45B1H561K	CERAMIC 560PF K		
C9			CM93D2H681J	MICA 680PF J		
C10 ,11			C91-1004-05	CERAMIC 0.0068UF J		
C12			CC45SL2H151J	CERAMIC 150PF J		
C13			CM73F2H122J	CHIP C 1200PF J		
C15			C91-0119-05	CERAMIC 0.047UF K		
C16			CE04EW1H100M	ELECTRO 10UF 50WV		
C18			CE04EW1E101M	ELECTRO 100UF 25WV		
C21			C91-0119-05	CERAMIC 0.047UF K		
C22			CE04EW1H100M	ELECTRO 10UF 50WV		

E: Scandinavia & Europe K: USA P: Canada
U: PX(Far East, Hawaii) T: England M: Other Areas
UE : AAFES(Europe) X: Australia

A : TS-140S (K,M,T,W)
B : TS-680S (K)

⚠ indicates safety critical components.

PARTS LIST

* New Parts
Parts without Parts No. are not supplied.
Les articles non mentionnes dans le Parts No. ne sont pas fournis.
Teile ohne Parts No. werden nicht geliefert.

Ref. No. 参照番号	Address 位置	New Parts 新	Parts No. 部品番号	Description 部品名／規格	Destination 仕向	Remarks 備考
C24			CE04EW1E101M	ELECTRO 100UF 25WV		
C28			CE04EW1E470M	ELECTRO 47UF 25WV		
C32 ,33			C90-0817-05	ELECTRO 1000UF 16WV		
C36			CE04EW1E470M	ELECTRO 47UF 25WV		
C37			C91-0119-05	CERAMIC 0.047UF K		
C38			CE04EW1E470M	ELECTRO 47UF 25WV		
C40 ,41			CE04EW1E470M	ELECTRO 47UF 25WV		
C42			C91-0119-05	CERAMIC 0.047UF K		
C43			CC45SL2H121J	CERAMIC 120PF J		
-			E31-2067-05	COAXIAL CABLE WITH PLUG(50D)		B
-			E31-3028-05	COAXIAL CABLE WITH PLUG (PA)		
-		*	E31-3304-05	COAXIAL CABLE WITH PLUG (DRV)		
-		*	E31-3322-05	CONNECTING WIRE		
-		*	E31-3324-05	CONNECTING WIRE(FAN)		
-		*	E31-3327-05	CONNECTING WIRE		
CN1			E40-3238-05	PIN CONNECTOR (3P)		
CN2			E40-3239-05	PIN CONNECTOR (4P)		
CN3			E40-3238-05	PIN CONNECTOR (3P)		
CN4		*	E31-3317-05	CONNECTING WIRE		B
CN5			E40-3237-05	PIN CONNECTOR (2P)		
158	1C		F29-0014-05	INSULATOR		
172	2D	*	F01-0954-01	HEAT SINK		
176	1C	*	F09-0417-05	FAN (MOTOR)		
-			F20-0078-05	INSULATING BOARD		
-		*	F20-0582-04	INSULATING BOARD		
178	2D	*	G02-0574-04	LEAF SPRING		
-			G02-0571-04	FLAT SPRING (02)		
-			L92-0102-05	TROIDAL CORE (KT-41)		
-			L92-0106-05	TROIDAL CORE (KT-41)		
L1			L40-1501-14	SMALL FIXED INDUCTOR		
L2			L40-3391-14	SMALL FIXED INDUCTOR		
L3			L19-0315-25	TROIDAL COIL		
L4 ,5		*	L33-0699-05	CHOKE COIL		
L6 ,7			L33-0232-05	CHOKE COIL (1UH)		
L8		*	L33-0699-05	CHOKE COIL		
L9			L19-0342-05	DRIVE TRANSFORMER		
L10 ,11			L33-0617-05	TROIDAL COIL		
L12			L39-0424-05	NFB COIL		
L13		*	L39-0431-05	TROIDAL COIL		
L14			L33-0651-05	CHOKE COIL		
L15			L33-0617-05	TROIDAL COIL		
L16			L40-1011-14	SMALL FIXED INDUCTOR		
L17			L15-0016-05	LOW-FREQUENCY CHOKE COIL		
@	1C,1D		N87-3008-46	BRAZIER HEAD TAPTITE SCREW		
S	1C		N09-0623-04	SEMS SCREW		
T	2C		N35-3006-46	BINDING HEAD MACHINE SCREW		
R5			RC05GF2H3R9J	RC 3.9 J 1/2W		
R8 ,9			RS14DB3A181J	FL-PROOF RS 180 J 1W		
R10 -13			RS14DB3A5R6J	FL-PROOF RS 5.6 J 1W		
R14 ,15			RS14DB3A150J	FL-PROOF RS 15 J 1W		
R16 ,17			RS14DB3A3R3J	FL-PROOF RS 3.3 J 1W		
R18			RS14DB3A100J	FL-PROOF RS 10 J 1W		

FOR SERVICE MANUALS
CONTACT:
MAURITRON TECHNICAL SERVICES
www.mauritron.co.uk
TEL: 01844 - 351694
FAX: 01844 - 352554

E: Scandinavia & Europe K: USA P: Canada
U: PX(Far East, Hawaii) T: England M: Other Areas
UE: AAFES(Europe) X: Australia

A : TS-140S (K,M,T,W)
B : TS-680S (K)

⚠ indicates safety critical components.

PARTS LIST

* New Parts
Parts without Parts No. are not supplied.
Les articles non mentionnes dans le Parts No. ne sont pas fournis.
Teile ohne Parts No. werden nicht geliefert.

Ref. No. 参照番号	Address 位置	New Parts 新	Parts No. 部品番号	Description 部品名／規格	Destination 仕向	Remarks 備考
VR1 ,2			R12-1431-05	TRIMMING POT. (1K)		
W1			R92-0150-05	JUMPER REST 0 OHM		
W2 ,3			R92-1061-05	JUMPER REST 0 OHM		A
K1			S51-2417-05	RELAY		B
D1			MV-5T	VARISTER		
D2 ,3			SV-03YS	VARISTER		
D4			1S1555	DIODE		B
D5			1S1555	DIODE		
D6		*	SG-5L(R)	DIODE		
D7			MTZ8.2JA	ZENER DIODE		
Q1			2SC1971	TRANSISTOR		
Q2 ,3			2SC2509	TRANSISTOR		
Q4 ,5			2SC2879	TRANSISTOR		
Q6 ,7			2SD1406(Y)	TRANSISTOR		
Q8 ,9			AN7805	IC(VOLTAGE REGULATOR/ +5V)		
TH1			5TP41L	THERMISTOR		
192	1D	*	X59-3370-00	MODULE UNIT		
FILTER UNIT (X51-3040-XX) -00 : TS-680S -11 : TS-140S						
C1			CM93D2H152J	MICA 1500PF J		
C2			CM93D2H471J	MICA 470PF J		
C3			CM93D2H152J	MICA 1500PF J		
C4			CM93D2H221J	MICA 220PF J		
C5			CM93D2H821J	MICA 820PF J		
C6			CC45SL2H431J	CERAMIC 430PF J		
C7			CC45SL2H241J	CERAMIC 240PF J		
C8 ,9			CC45SL2H431J	CERAMIC 430PF J		
C10			CC45SL2H151J	CERAMIC 150PF J		
C11			CC45SL2H331J	CERAMIC 330PF J		
C12			CC45SL2H820J	CERAMIC 82PF J		
C13			CC45SL2H331J	CERAMIC 330PF J		
C14			CC45SL2H101J	CERAMIC 100PF J		
C15			CC45SL2H431J	CERAMIC 430PF J		
C16			CC45SL2H331J	CERAMIC 330PF J		
C17			CC45SL2H151J	CERAMIC 150PF J		
C18			CC45SL2H330J	CERAMIC 33PF J		
C19 ,20			CC45SL2H151J	CERAMIC 150PF J		
C21			CC45SL2H121J	CERAMIC 120PF J		
C22			CC45SL2H181J	CERAMIC 180PF J		
C23			CC45SL2H820J	CERAMIC 82PF J		
C24			CC45SL2H680J	CERAMIC 68PF J		
C25			CC45SL2H181J	CERAMIC 180PF J		
C26			CC45SL2H121J	CERAMIC 120PF J		
C27			CC45SL2H101J	CERAMIC 100PF J		
C28			CC45SL2H470J	CERAMIC 47PF J		
C29			CC45SL2H680J	CERAMIC 68PF J		
C30			CC45SL2H330J	CERAMIC 33PF J		
C31			CC45SL2H820J	CERAMIC 82PF J		
C32			CC45SL2H680J	CERAMIC 68PF J		
C33			CC45SL2H100D	CERAMIC 10PF D		
C34			CC45SL2H820J	CERAMIC 82PF J		
C35 ,36			CC45SL2H330J	CERAMIC 33PF J		
C37			CC45SL2H270J	CERAMIC 27PF J		B
C38			CC45SL2H120J	CERAMIC 12PF J		B

E: Scandinavia & Europe K: USA P: Canada
U: PX(Far East, Hawaii) T: England M: Other Areas
UE: AAFES(Europe) X: Australia

A : TS-140S (K,M,T,W)
B : TS-680S (K)

⚠ Indicates safety critical components.

PARTS LIST

* New Parts
Parts without Parts No. are not supplied.
Les articles non mentionnes dans le Parts No. ne sont pas fournis.
Telle ohne Parts No. werden nicht geliefert.

Ref. No. 参照番号	Address 位置	New Parts 新	Parts No. 部品番号	Description 部品名／規格	Destination 仕向	Remarks 備考
C39			CC45SL2H270J	CERAMIC 27PF J		B
C40 ,41			CC45SL2H330J	CERAMIC 33PF J		
C42 ,43			CC45SL2H560J	CERAMIC 56PF J		B
C66			CC45CH2H030C	CERAMIC 3.0PF C		
C67			CC45CH1H560J	CERAMIC 56PF J		
C68			CC45CH1H101J	CERAMIC 100PF J		
C79			CC45CH1H680J	CERAMIC 68PF J		B
C80			CK45B1H472K	CERAMIC 4700PF K		B
C81 ,82			CE04EW1E470M	ELECTRO 47UF 25WV		B
C83			CE04EW1H3R3M	ELECTRO 3.3UF 50WV		B
C84 ,85			CK45B1H472K	CERAMIC 4700PF K		B
TC1			C05-0309-05	TRIMMING CAP (40P)		B
TC2			C05-0030-15	TRIMMING CAP (20P)		
CN1			E40-3238-05	PIN CONNECTOR (3P)		
CN2			E40-3238-05	PIN CONNECTOR (3P)		B
CN3			E40-3242-05	PIN CONNECTOR (7P)		
CN4			E40-3239-05	PIN CONNECTOR (4P)		
CN5			E04-0157-05	PIN CONNECTOR		
CN6			E04-0157-05	PIN CONNECTOR		B
CN7			E40-5059-05	PIN CONNECTOR (5P)		
CN8 ,9		*	E31-3330-15	CONNECTING WIRE		
CN10			E40-5059-05	PIN CONNECTOR (5P)		
196	1F		J32-0761-04	BOSS		
-			L92-0102-05	TRADAL CNTL (RT-41)		
-			L92-0107-05	TRADAL CNTL (T50-2)		
-			L92-0108-05	TRADAL CNTL (T50-6)		
L1			L34-3148-05	TRADAL CNTL		
L2			L34-3147-05	TRADAL CNTL		
L3			L34-3150-05	TRADAL CNTL		
L4			L34-3149-05	TRADAL CNTL		
L5			L34-3152-05	TRADAL CNTL		
L6			L34-3151-05	TRADAL CNTL		
L7			L34-3153-05	TRADAL CNTL		
L8			L34-3154-05	TRADAL CNTL		
L9 ,10			L34-3156-05	CNTL		
L11			L34-3157-05	CNTL		
L12			L34-3158-05	CNTL		
L13 15			L34-1021-05	CNTL		B
L16			L33-0222-05	CNTL		B
L17			L34-1022-05	CNTL		B
L18			L34-1027-05	CNTL		B
L19			L39-0406-05	TRADAL CNTL		
L20			L33-0651-05	CHOKE CNTL		B
L21 ,22			L40-1011-14	SMALL FIXED INDUCTOR		
L23			L40-1011-14	SMALL FIXED INDUCTOR		B
L23 ,24			L40-1021-14	SMALL FIXED INDUCTOR		
L25 -30			L40-1011-14	SMALL FIXED INDUCTOR		
L31			L40-1011-14	SMALL FIXED INDUCTOR		B
L32			L40-6825-04	SMALL FIXED INDUCTOR		
M	1F		N30-3006-46	PAN HEAD MACHINE SCREW		
VR1			R12-0431-05	TRIMMING POT. (100)		
W17 -19			R92-0150-05	JUMPER REST 0 OHM		

FOR SERVICE MANUALS
CONTACT:
MAURITRON TECHNICAL SERVICES
www.mauritron.co.uk
TEL: 01844 - 351694
FAX: 01844 - 352554

E: Scandinavia & Europe K: USA P: Canada
U: PX(Far East, Hawaii) T: England M: Other Areas
UE : AAFES(Europe) X: Australia

A : TS-140S (K,M,T,W)
B : TS-680S (K)

⚠ indicates safety critical components.

PARTS LIST

* New Parts
Parts without Parts No. are not supplied.
Les articles non mentionnes dans le Parts No. ne sont pas fournis.
Telle ohne Parts No. werden nicht geliefert.

Ref. No. 参照番号	Address 位置	New Parts 新	Parts No. 部品番号	Description 部品名／規格	Destination 仕向	Remarks 備考
W20			R92-0150-05	JUMPER REST 0 OHM		A
K1 -12			S51-1432-05	RELAY		
K13 -15			S51-1432-05	RELAY		B
K16			S51-1429-05	RELAY		
D1 -6			1S1555	DIODE		
D7			1S1555	DIODE		B
D8			1S1555	DIODE		
D9 ,10			1SS101	DIODE		
D11			DSP-301N	SURGE ABSORBER		
Q1			2SC2538-22-A	TRANSISTOR		B
Q2			M57735	IC(POWER MODULE)		D
Q3			2SC2459(BL)	TRANSISTOR		
CONTROL UNIT (X53-3100-XX) -11 : TS-140S -12 : TS-680S						
C2			CE04EW1C470M	ELECTRO 47UF 16WV		
C3 ,4			CK41FY1E102M	CYLND CHIP C 1000PF M		
C5			C092M1H473K	MYLAR 0.047UF K		
C6			C092M1H223K	MYLAR 0.022UF K		
C7			CK41FY1E222M	CYLND CHIP C 2200PF M		
C9			CE04EW1C470M	ELECTRO 47UF 16WV		
C10			CC41FUJ1H220J	CYLND CHIP C 22PF J		
C11			CC41FCH1H100D	CYLND CHIP C 10PF D		
C13			CC41FCH1H150J	CYLND CHIP C 15PF J		
C14			CC41FCH1H120J	CYLND CHIP C 12PF J		
C15			CC41FCH1H050C	CYLND CHIP C 5.0PF C		
C16			CK41FY1E102M	CYLND CHIP C 1000PF M		
C17			CE04EW1C470M	ELECTRO 47UF 16WV		
C18 ,19			CK41FY1E102M	CYLND CHIP C 1000PF M		
C21			CK41FY1E102M	CYLND CHIP C 1000PF M		
C23			CE04EW1C220M	ELECTRO 22UF 16WV		
C25			CK41FB1H391K	CYLND CHIP C 390PF K		
C26			CK41FW1H821M	CYLND CHIP C 820PF M		
C27			CK41FB1H391K	CYLND CHIP C 390PF K		
C30			CE04EW1C220M	ELECTRO 22UF 16WV		
C33			CC41FSL1H330J	CYLND CHIP C 33PF J		
C34			CC41FSL1H680J	CYLND CHIP C 68PF J		
C35			CC41FSL1H330J	CYLND CHIP C 33PF J		
C38			CE04EW1C470M	ELECTRO 47UF 16WV		
C40			CK41FY1E102M	CYLND CHIP C 1000PF M		
C41			C092M1H223K	MYLAR 0.022UF K		
C42			C092M1H103K	MYLAR 0.010UF K		
C43			CK41FY1E222M	CYLND CHIP C 2200PF M		
C45			CE04EW1C470M	ELECTRO 47UF 16WV		
C46			CC41FCH1H100D	CYLND CHIP C 10PF D		
C48			CC41FCH1H220J	CYLND CHIP C 22PF J		
C49			CC73FCH1H270J	CHIP C 27PF J		
C50			CC41FCH1H050C	CYLND CHIP C 5.0PF C		
C52			CE04EW1C470M	ELECTRO 47UF 16WV		
C58			CC41FSL1H270J	CYLND CHIP C 27PF J		
C59			CC41FSL1H560J	CYLND CHIP C 56PF J		
C60			CC41FSL1H270J	CYLND CHIP C 27PF J		
C72			CK41FA1H181K	CYLND CHIP C 180PF K		
C73			CK41FB1H391K	CYLND CHIP C 390PF K		
C74			CK41FA1H181K	CYLND CHIP C 180PF K		

FOR SERVICE MANUALS
CONTACT:
MAURITRON TECHNICAL SERVICES
www.mauritron.co.uk
TEL: 01844 - 351694
FAX: 01844 - 352554

E: Scandinavia & Europe K: USA P: Canada
U: PX(Far East, Hawaii) T: England M: Other Areas
UE : AAFES(Europe) X: Australia

A : TS-140S (K,M,T,W)
B : TS-680S (K)

⚠ Indicates safety critical components.

PARTS LIST

* New Parts
Parts without Parts No. are not supplied.
Les articles non mentionnes dans le Parts No. ne sont pas fournis.
Telle ohne Parts No. werden nicht geliefert.

Ref. No. 参照番号	Address 位置	New Parts 新	Parts No. 部品番号	Description 部品名／規格	Destination 仕向	Remarks 備考
C77			CC41FCH1H030C	CYLND CHIP C 3.0PF C		
C78			CC73FCH1H560J	CHIP C 56PF J		
C79			CC41FUJ1H180J	CYLND CHIP C 18PF J		
C80			CC41FCH1H020C	CYLND CHIP C 2.0PF C		
C82			CE04EW1C220M	ELECTRO 22UF 16WV		
C87 ,88			CC41FSL1H560J	CYLND CHIP C 56PF J		
C90			CC41FSL1H330J	CYLND CHIP C 33PF J		
C91			CC41FSL1H560J	CYLND CHIP C 56PF J		
C92			CC41FSL1H330J	CYLND CHIP C 33PF J		
C99			CC41FCH1H020C	CYLND CHIP C 2.0PF C		
C101			CC41FCH1H030C	CYLND CHIP C 3.0PF C		
C102			CC41FCH1H100D	CYLND CHIP C 10PF D		
C110,111			CC41FCH1H010C	CYLND CHIP C 1.0PF C		
C118~120			CC41FCH1H040C	CYLND CHIP C 4.0PF C		
C121			CC41FCH1H150J	CYLND CHIP C 15PF J		
C124			CC41FSL1H560J	CYLND CHIP C 56PF J		
C125			CC41FSL1H121J	CYLND CHIP C 120PF J		
C126			CC41FSL1H560J	CYLND CHIP C 56PF J		
C133			CK41FY1E102M	CYLND CHIP C 1000PF M		
C134,135			CC41FCH1H0R5C	CYLND CHIP C 0.5PF C		
C136			CK41FY1E102M	CYLND CHIP C 1000PF M		
C138,139			CC41FCH1H010C	CYLND CHIP C 1.0PF C		
C144			CK41FY1E102M	CYLND CHIP C 1000PF M		
C153			CC41FCH1H030C	CYLND CHIP C 3.0PF C		
C154			CC41FCH1H150J	CYLND CHIP C 15PF J		
C155			CC41FCH1H040C	CYLND CHIP C 4.0PF C		
C156			CC41FCH1H150J	CYLND CHIP C 15PF J		
C157			CC41FCH1H040C	CYLND CHIP C 4.0PF C		
C158			CC41FCH1H150J	CYLND CHIP C 15PF J		
C159			CC41FCH1H030C	CYLND CHIP C 3.0PF C		
C162			CC73FCH1H560J	CHIP C 56PF J		
C166			CE04EW1C470M	ELECTRO 47UF 16WV		
C167,168			CK41FY1E102M	CYLND CHIP C 1000PF M		
C169			CC41FCH1H0R5C	CYLND CHIP C 0.5PF C		
C170			CQ92M1H103K	MYLAR 0.010UF K		
C171			C91-1083-05	FILM 0.47UF 63WV		
C173			CE04EW1C101M	ELECTRO 100UF 16WV		
C177			CE04EW1C470M	ELECTRO 47UF 16WV		
C179			CK41FY1E102M	CYLND CHIP C 1000PF M		
C180			CQ92M1H223K	MYLAR 0.022UF K		
C181		*	C91-1101-05	FILM 0.22UF 63WV		
C182			CE04EW1H100M	ELECTRO 10UF 50WV		
C183			C91-0117-05	CERAMIC 0.01UF K		
C184			CS15E1VR47M	TANTAL 0.47UF 35WV		
C186			CE04EW1C470M	ELECTRO 47UF 16WV		
C187			CK45B1H182K	CERAMIC 1800PF K		
C188			CC41FUJ1H070D	CYLND CHIP C 7.0PF D		
C189			CC41FCH1H100D	CYLND CHIP C 10PF D		
C191,192			CC73FCH1H330J	CHIP C 33PF J		
C193			CC41FCH1H050C	CYLND CHIP C 5.0PF C		
C195			CE04EW1C470M	ELECTRO 47UF 16WV		
C197			CC41FCH1H120J	CYLND CHIP C 12PF J		
C198			CC41FCH1H100D	CYLND CHIP C 10PF D		
C201			CC41FSL1H270J	CYLND CHIP C 27PF J		
C202			CC41FCH1H220J	CYLND CHIP C 22PF J		

E: Scandinavia & Europe K: USA P: Canada
U: PX(Far East, Hawaii) T: England M: Other Areas
UE: AAFES(Europe) X: Australia

A : TS-140S (K,M,T,W)
B : TS-680S (K)

⚠ indicates safety critical components.

PARTS LIST

* New Parts
Parts without Parts No. are not supplied.
Les articles non mentionnes dans le Parts No. ne sont pas fournis.
Teile ohne Parts No. werden nicht geliefert.

Ref. No. 参照番号	Address 位置	New Parts 新	Parts No. 部品番号	Description 部品名／規格	Destination 仕向	Remarks 備考
C203			CC41FSL1H270J	CYLND CHIP C 27PF J		
C204-209			CC41FSL1H101J	CYLND CHIP C 100PF J		
C215			CE04EW1C470M	ELECTRO 47UF 16WV		
C217			CE04EW1C101M	ELECTRO 100UF 16WV		
C220			CK41FB1H471K	CYLND CHIP C 470PF K		
C221,222			CC73FCH1H270J	CHIP C 27PF J		
C223			CC41FCH1H100D	CYLND CHIP C 10PF D		
C224			CK73FB1H332K	CHIP C 3300PF K		
C229			CE04EW1C470M	ELECTRO 47UF 16WV		
C232			C90-2041-05	ELECTRO 10UF 10WV		
C234			CE04EW1C470M	ELECTRO 47UF 16WV		
C237			CE04EW1C470M	ELECTRO 47UF 16WV		
C260-267			CK41FB1H471K	CYLND CHIP C 470PF K		
C273,274			CK41FB1H471K	CYLND CHIP C 470PF K		
C277,278			CK41FY1E102M	CYLND CHIP C 1000PF M		
C280-283			CK41FY1E102M	CYLND CHIP C 1000PF M		
C286-293			CC41FSL1H101J	CYLND CHIP C 100PF J		
TC1			C05-0309-05	TRIMMING CAP (40PF)		
-			E23-0512-05	TERMINAL		
CN1			E40-3237-05	PIN CONNECTOR (2P)		
CN2			E40-3238-05	PIN CONNECTOR (3P)		
CN3			E04-0157-05	RF COAXIAL CABLE RECEPTACLE		
CN4			E40-3230-05	PIN CONNECTOR (3P)		
CN5			E40-3237-05	PIN CONNECTOR (2P)		
CN6			E04-0157-05	RF COAXIAL CABLE RECEPTACLE		
CN7			E40-3237-05	PIN CONNECTOR (2P)		
CN8			E40-3242-05	PIN CONNECTOR (7P)		
CN9			E40-5066-05	PIN CONNECTOR (9P)		
CN10		*	E40-5141-05	FPC CONNECTOR (26P)		
CN11		*	E40-5133-05	FPC CONNECTOR (18P)		
CN12			E40-3239-05	PIN CONNECTOR (4P)		
CN13			E40-3240-05	PIN CONNECTOR (5P)		
CN14			E40-3230-05	PIN CONNECTOR (3P)		
CN15			E02-2001-05	IC SOCKET (28P)		
A1 -4			F11-0817-04	SHIELDING COVER		
A5			F10-1222-14	SHIELDING COVER		
A6			F11-1021-04	SHIELDING COVER		
A9 -12			F10-1344-04	SHIELDING PLATE		
L1			L40-1011-14	SMALL FIXED INDUCTOR		
L2			L40-1001-14	SMALL FIXED INDUCTOR		
L3			L32-0666-15	COIL (VCO 91MHZ)		
L4 ,5			L40-1011-14	SMALL FIXED INDUCTOR		
L6 ,7			L40-3311-14	SMALL FIXED INDUCTOR		
L8 ,9			L40-3301-17	SMALL FIXED INDUCTOR		
L10			L40-1011-14	SMALL FIXED INDUCTOR		
L11			L40-1501-14	SMALL FIXED INDUCTOR		
L12			L32-0649-05	COIL (VCO 55MHZ)		
L13 ,14			L40-1011-14	SMALL FIXED INDUCTOR		
L15 ,16			L40-2201-17	SMALL FIXED INDUCTOR		
L17		*	L34-4053-05	COIL (10MHZ BPF)		
L18		*	L34-4054-15	COIL (10MHZ BPF)		
L19		*	L34-4053-05	COIL (10MHZ BPF)		
L20			L40-1011-14	SMALL FIXED INDUCTOR		

FOR SERVICE MANUALS
CONTACT:
MAURITRON TECHNICAL SERVICES
www.mauritron.co.uk
TEL: 01844 - 351694
FAX: 01844 - 352554

E: Scandinavia & Europe K: USA P: Canada
U: PX(Far East, Hawaii) T: England M: Other Areas
UE: AAFES(Europe) X: Australia

A : TS-140S (K,M,T,W)
B : TS-680S (K)

⚠ Indicates safety critical components.

PARTS LIST

* New Parts
Parts without Parts No. are not supplied.
Les articles non mentionnes dans le Parts No. ne sont pas fournis.
Telle ohne Parts No. werden nicht geliefert.

Ref. No. 参照番号	Address 位置	New Parts 新	Parts No. 部品番号	Description 部品名／規格	Destination 仕向	Remarks 備考
L21 ,22			L40-1211-17	SMALL FIXED INDUCTOR		
L23 ,24			L40-1011-14	SMALL FIXED INDUCTOR		
L25			L40-2201-17	SMALL FIXED INDUCTOR		
L26 ,27			L40-3301-17	SMALL FIXED INDUCTOR		
L28 ,29			L34-4055-05	COIL (5.5MHZ BPF)		
L30 -32			L34-4057-05	COIL (78MHZ BPF)		
L33 -35			L40-1011-14	SMALL FIXED INDUCTOR		
L36			L40-1292-17	SMALL FIXED INDUCTOR		
L37 ,38			L40-2201-17	SMALL FIXED INDUCTOR		
L39 -41		*	L34-4056-05	COIL (39MHZ BPF)		
L42 -44			L34-4057-05	COIL (78MHZ BPF)		
L45			L40-3991-17	SMALL FIXED INDUCTOR		
L46 ,47			L40-3391-17	SMALL FIXED INDUCTOR		
L48			L40-3991-17	SMALL FIXED INDUCTOR		
L49			L40-1011-14	SMALL FIXED INDUCTOR		
L51			L40-1011-14	SMALL FIXED INDUCTOR		
L52			L40-2211-14	SMALL FIXED INDUCTOR		
L53			L40-2201-14	SMALL FIXED INDUCTOR		
L54		*	L34-4060-05	COIL (VCO 40MHZ)		
L55			L40-1011-14	SMALL FIXED INDUCTOR		
L56			L34-1124-05	COIL		
L57			L40-1011-14	SMALL FIXED INDUCTOR		
L58			L40-1011-13	SMALL FIXED INDUCTOR		
L59			L40-1011-14	SMALL FIXED INDUCTOR		
L60 ,61			L40-1011-13	SMALL FIXED INDUCTOR		
L62			L40-1011-14	SMALL FIXED INDUCTOR		
X1			L77-1299-05	CRYSTAL RESONATOR(36MHZ)		
X2			L78-0015-05	RESONATOR (2.4MHZ)		
CP1			R90-0229-05	MULTI-COMP 10KX8 J 1/16W		
R2			RD41FB2B223J	CYLND CHIP R 22K J 1/8W		
R3			RD41FB2B332J	CYLND CHIP R 3.3K J 1/8W		
R4			RD41FB2B393J	CYLND CHIP R 39K J 1/8W		
R5			RD41FB2B103J	CYLND CHIP R 10K J 1/8W		
R6			RD41FB2B102J	CYLND CHIP R 1.0K J 1/8W		
R7			RD41FB2B101J	CYLND CHIP R 100 J 1/8W		
R8			RD41FB2B223J	CYLND CHIP R 22K J 1/8W		
R9			RD41FB2B103J	CYLND CHIP R 10K J 1/8W		
R10			RD41FB2B102J	CYLND CHIP R 1.0K J 1/8W		
R11			RD41FB2B223J	CYLND CHIP R 22K J 1/8W		
R12			RD41FB2B103J	CYLND CHIP R 10K J 1/8W		
R13			RD41FB2B101J	CYLND CHIP R 100 J 1/8W		
R14			RD41FB2B471J	CYLND CHIP R 470 J 1/8W		
R15			RD41FB2B392J	CYLND CHIP R 3.9K J 1/8W		
R16 ,17			RD41FB2B182J	CYLND CHIP R 1.8K J 1/8W		
R18 ,19			RD41FB2B681J	CYLND CHIP R 680 J 1/8W		
R20			RD41FB2B101J	CYLND CHIP R 100 J 1/8W		
R21			RD41FB2B153J	CYLND CHIP R 15K J 1/8W		
R22			RD41FB2B103J	CYLND CHIP R 10K J 1/8W		
R23			RD41FB2B101J	CYLND CHIP R 100 J 1/8W		
R24			RD41FB2B471J	CYLND CHIP R 470 J 1/8W		
R25 ,26			RD41FB2B101J	CYLND CHIP R 100 J 1/8W		
R27			RD41FB2B182J	CYLND CHIP R 1.8K J 1/8W		
R28			RD41FB2B681J	CYLND CHIP R 680 J 1/8W		
R30			RD41FB2B223J	CYLND CHIP R 22K J 1/8W		

E: Scandinavia & Europe K: USA P: Canada
U: PX(Far East, Hawaii) T: England M: Other Arees
UE: AAFES(Europe) X: Australia

A : TS-140S (K,M,T,W)
B : TS-680S (K)

⚠ indicates safety critical components.

PARTS LIST

× New Parts
Parts without Parts No. are not supplied.
Les articles non mentionnes dans le Parts No. ne sont pas fournis.
Teile ohne Parts No. werden nicht geliefert.

Ref. No. 参照番号	Address 位置	New Parts 新	Parts No. 部品番号	Description 部品名／規格	Destination 仕向	Remarks 備考
R31			RD41FB2B182J	CYLND CHIP R 1.8K J 1/8W		
R32			RD41FB2B823J	CYLND CHIP R 82K J 1/8W		
R33			RD41FB2B223J	CYLND CHIP R 22K J 1/8W		
R34			RD41FB2B102J	CYLND CHIP R 1.0K J 1/8W		
R35			RD41FB2B101J	CYLND CHIP R 100 J 1/8W		
R36			RD41FB2B223J	CYLND CHIP R 22K J 1/8W		
R37			RD41FB2B103J	CYLND CHIP R 10K J 1/8W		
R38			RD41FB2B102J	CYLND CHIP R 1.0K J 1/8W		
R39			RD41FB2B223J	CYLND CHIP R 22K J 1/8W		
R40			RD41FB2B103J	CYLND CHIP R 10K J 1/8W		
R41			RD41FB2B101J	CYLND CHIP R 100 J 1/8W		
R42			RD41FB2B471J	CYLND CHIP R 470 J 1/8W		
R43			RD41FB2B392J	CYLND CHIP R 3.9K J 1/8W		
R44			RD41FB2B182J	CYLND CHIP R 1.8K J 1/8W		
R45			RD41FB2B681J	CYLND CHIP R 680 J 1/8W		
R46			RD41FB2B101J	CYLND CHIP R 100 J 1/8W		
R47			RD41FB2B681J	CYLND CHIP R 680 J 1/8W		
R48			RD41FB2B101J	CYLND CHIP R 100 J 1/8W		
R49			RD41FB2B333J	CYLND CHIP R 33K J 1/8W		
R50			RD41FB2B103J	CYLND CHIP R 10K J 1/8W		
R52			RD41FB2B101J	CYLND CHIP R 100 J 1/8W		
R53			RD41FB2B472J	CYLND CHIP R 4.7K J 1/8W		
R54			RD41FB2B332J	CYLND CHIP R 3.3K J 1/8W		
R55			RD41FB2B181J	CYLND CHIP R 180 J 1/8W		
R56			RD41FB2B222J	CYLND CHIP R 2.2K J 1/8W		
R57			RD41FB2B681J	CYLND CHIP R 680 J 1/8W		
R58			RD41FB2B562J	CYLND CHIP R 5.6K J 1/8W		
R59			RD41FB2B682J	CYLND CHIP R 6.8K J 1/8W		
R60			RD41FB2B561J	CYLND CHIP R 560 J 1/8W		
R61			RD41FB2B223J	CYLND CHIP R 22K J 1/8W		
R62			RD41FB2B103J	CYLND CHIP R 10K J 1/8W		
R63			RD41FB2B101J	CYLND CHIP R 100 J 1/8W		
R64			RD41FB2B471J	CYLND CHIP R 470 J 1/8W		
R65			RD41FB2B472J	CYLND CHIP R 4.7K J 1/8W		
R66			RD41FB2B332J	CYLND CHIP R 3.3K J 1/8W		
R67			RD41FB2B181J	CYLND CHIP R 180 J 1/8W		
R68			RD41FB2B102J	CYLND CHIP R 1.0K J 1/8W		
R69			RD41FB2B681J	CYLND CHIP R 680 J 1/8W		
R70			RD41FB2B182J	CYLND CHIP R 1.8K J 1/8W		
R71			RD41FB2B681J	CYLND CHIP R 680 J 1/8W		
R72 , 73			RD41FB2B101J	CYLND CHIP R 100 J 1/8W		
R74			RD41FB2B223J	CYLND CHIP R 22K J 1/8W		
R75			RD41FB2B103J	CYLND CHIP R 10K J 1/8W		
R76			RD41FB2B101J	CYLND CHIP R 100 J 1/8W		
R78			RD41FB2B101J	CYLND CHIP R 100 J 1/8W		
R79			RD41FB2B471J	CYLND CHIP R 470 J 1/8W		
R80			RD41FB2B221J	CYLND CHIP R 220 J 1/8W		
R81			RD41FB2B471J	CYLND CHIP R 470 J 1/8W		
R82			RD41FB2B102J	CYLND CHIP R 1.0K J 1/8W		
R83			RD41FB2B681J	CYLND CHIP R 680 J 1/8W		
R84			RD41FB2B331J	CYLND CHIP R 330 J 1/8W		
R85			RD41FB2B272J	CYLND CHIP R 2.7K J 1/8W		
R86			RD41FB2B101J	CYLND CHIP R 100 J 1/8W		
R87			RD41FB2B471J	CYLND CHIP R 470 J 1/8W		
R88			RD41FB2B332J	CYLND CHIP R 3.3K J 1/8W		

E: Scandinavia & Europe K: USA P: Canede
U: PX(Far East, Hawaii) T: England M: Other Areas
UE : AAFES(Europe) X: Australia

A : TS-140S (K,M,T,W)
B : TS-680S (K)

⚠ indicates safety critical components.

FOR SERVICE MANUALS
CONTACT:
MAURITRON TECHNICAL SERVICES
www.mauritron.co.uk
TEL: 01844 - 351694
FAX: 01844 - 352554

PARTS LIST

* New Parts
Parts without Parts No. are not supplied.
Les articles non mentionnes dans le Parts No. ne sont pas fournis.
Teile ohne Parts No. werden nicht geliefert.

Ref. No. 参照番号	Address 位置	New Parts 新	Parts No. 部品番号	Description 部品名／規格	Destination 仕向	Remarks 備考
R89			RD41FB2B122J	CYLND CHIP R 1.2K J 1/8W		
R90			RD41FB2B101J	CYLND CHIP R 100 J 1/8W		
R91			RD41FB2B122J	CYLND CHIP R 1.2K J 1/8W		
R92			RD41FB2B181J	CYLND CHIP R 180 J 1/8W		
R93			RD41FB2B561J	CYLND CHIP R 560 J 1/8W		
R94			RD41FB2B181J	CYLND CHIP R 180 J 1/8W		
R95			RD41FB2B561J	CYLND CHIP R 560 J 1/8W		
R96			RD41FB2B681J	CYLND CHIP R 680 J 1/8W		
R97			RD41FB2B223J	CYLND CHIP R 22K J 1/8W		
R98			RD41FB2B103J	CYLND CHIP R 10K J 1/8W		
R99			RD41FB2B101J	CYLND CHIP R 100 J 1/8W		
R101			RD41FB2B101J	CYLND CHIP R 100 J 1/8W		
R102			RD41FB2B223J	CYLND CHIP R 22K J 1/8W		
R103			RD41FB2B103J	CYLND CHIP R 10K J 1/8W		
R104			RD41FB2B101J	CYLND CHIP R 100 J 1/8W		
R105			RD41FB2B471J	CYLND CHIP R 470 J 1/8W		
R106,107			RD41FB2B101J	CYLND CHIP R 100 J 1/8W		
R108			RD41FB2B681J	CYLND CHIP R 680 J 1/8W		
R109			RD41FB2B101J	CYLND CHIP R 100 J 1/8W		
R110			RD41FB2B333J	CYLND CHIP R 33K J 1/8W		
R111			RD41FB2B103J	CYLND CHIP R 10K J 1/8W		
R112			RD41FB2B220J	CYLND CHIP R 22 J 1/8W		
R113			RD41FB2B681J	CYLND CHIP R 680 J 1/8W		
R114			RD41FB2B101J	CYLND CHIP R 100 J 1/8W		
R115			RD41FB2B223J	CYLND CHIP R 22K J 1/8W		
R116			RD41FB2B822J	CYLND CHIP R 8.2K J 1/8W		
R117,118			RD41FB2B182J	CYLND CHIP R 1.8K J 1/8W		
R119			RD41FB2B102J	CYLND CHIP R 1.0K J 1/8W		
R121			RD41FB2B223J	CYLND CHIP R 22K J 1/8W		
R122,123			RD41FB2B472J	CYLND CHIP R 4.7K J 1/8W		
R124			RD41FB2B123J	CYLND CHIP R 12K J 1/8W		
R125			RD41FB2B182J	CYLND CHIP R 1.8K J 1/8W		
R126			RD41FB2B223J	CYLND CHIP R 22K J 1/8W		
R127			RD41FB2B331J	CYLND CHIP R 330 J 1/8W		
R128			RD41FB2B392J	CYLND CHIP R 3.9K J 1/8W		
R129			RD41FB2B104J	CYLND CHIP R 100K J 1/8W		
R130			RD41FB2B101J	CYLND CHIP R 100 J 1/8W		
R131			RD41FB2B223J	CYLND CHIP R 22K J 1/8W		
R132			RD41FB2B103J	CYLND CHIP R 10K J 1/8W		
R133			RD41FB2B102J	CYLND CHIP R 1.0K J 1/8W		
R134			RD41FB2B223J	CYLND CHIP R 22K J 1/8W		
R135			RD41FB2B103J	CYLND CHIP R 10K J 1/8W		
R136			RD41FB2B101J	CYLND CHIP R 100 J 1/8W		
R137			RD41FB2B471J	CYLND CHIP R 470 J 1/8W		
R138			RD41FB2B101J	CYLND CHIP R 100 J 1/8W		
R139			RD41FB2B223J	CYLND CHIP R 22K J 1/8W		
R140			RD41FB2B103J	CYLND CHIP R 10K J 1/8W		
R141			RD41FB2B101J	CYLND CHIP R 100 J 1/8W		
R142~148			RD41FB2B221J	CYLND CHIP R 220 J 1/8W		
R149			RD41FB2B103J	CYLND CHIP R 10K J 1/8W		
R150			RD41FB2B223J	CYLND CHIP R 22K J 1/8W		
R151			RD41FB2B220J	CYLND CHIP R 22 J 1/8W		
R152,153			RD41FB2B105J	CYLND CHIP R 1.0M J 1/8W		
R154			RD41FB2B104J	CYLND CHIP R 100K J 1/8W		
R155			RD41FB2B473J	CYLND CHIP R 47K J 1/8W		

E: Scandinavia & Europe K: USA P: Canada
U: PX(Far East, Hawaii) T: England M: Other Areas
UE: AAFES(Europe) X: Australia

A : TS-140S (K,M,T,W)
B : TS-680S (K)

⚠ indicates safety critical components.

PARTS LIST

* New Parts
Parts without Parts No. are not supplied.
Les articles non mentionnes dans le Parts No. ne sont pas fournis.
Telle ohne Parts No. werden nicht geliefert.

Ref. No. 参照番号	Address 位置	New Parts 新	Parts No. 部品番号	Description 部品名／規格	Destination 仕向	Remarks 備考
R156			RD41FB2B223J	CYLND CHIP R 22K J 1/8W		
R157			RD41FB2B184J	CYLND CHIP R 180K J 1/8W		
R158			RD41FB2B472J	CYLND CHIP R 4.7K J 1/8W		
R159			RD41FB2B103J	CYLND CHIP R 10K J 1/8W		
R160			RD41FB2B223J	CYLND CHIP R 22K J 1/8W		
R163			RD41FB2B473J	CYLND CHIP R 47K J 1/8W		
R164			RD41FB2B474J	CYLND CHIP R 470K J 1/8W		
R165			RD41FB2B104J	CYLND CHIP R 100K J 1/8W		
R166			RD41FB2B183J	CYLND CHIP R 18K J 1/8W		
R167-169			RD41FB2B103J	CYLND CHIP R 10K J 1/8W		
R170-183			RD41FB2B102J	CYLND CHIP R 1.0K J 1/8W		
R184-188			RD41FB2B101J	CYLND CHIP R 100 J 1/8W		
R189-193			RD41FB2B103J	CYLND CHIP R 10K J 1/8W		
R194			RD41FB2B274J	CYLND CHIP R 270K J 1/8W		
R195			RD41FB2B684J	CYLND CHIP R 680K J 1/8W		
R196			RD41FB2B103J	CYLND CHIP R 10K J 1/8W		
R197			RD41FB2B274J	CYLND CHIP R 270K J 1/8W		
R198			RD41FB2B684J	CYLND CHIP R 680K J 1/8W		
R199,200			RD41FB2B223J	CYLND CHIP R 22K J 1/8W		
R201,202			RD41FB2B472J	CYLND CHIP R 4.7K J 1/8W		
R203,204			RD41FB2B103J	CYLND CHIP R 10K J 1/8W		
R205,206			RD41FB2B123J	CYLND CHIP R 12K J 1/8W		
R207,208			RD41FB2B103J	CYLND CHIP R 10K J 1/8W		
R209			RD41FB2B472J	CYLND CHIP R 4.7K J 1/8W		
R210			RD41FB2B473J	CYLND CHIP R 47K J 1/8W		
R211			RD41FB2B684J	CYLND CHIP R 680K J 1/8W		
R212			RD41FB2B103J	CYLND CHIP R 10K J 1/8W		
VR1 ,2		*	R12-1067-05	TRIMMING POT. (2.2K)		
VR3 ,4			R12-3096-05	TRIMMING POT. (10K)		
W2 ,3			R92-1061-05	JUMPER REST 0 OHM		
D1			1SV53A	VARI-CAP DIODE		
D2 ,3			1TT310TE	VARICAP DIODE		
D4 -6			RLS135	CHIP DIODE		
D7 ,8			RLS73	CHIP DIODE		
D9 -15			RLS135	CHIP DIODE		
D16			RLS73	CHIP DIODE		
D17			1SV153	VARI-CAP DIODE		
D18 -21			RLS73	CHIP DIODE		
D24 -27			RLS73	CHIP DIODE		
D29			1SS133	DIODE		A
D31			1SS133	DIODE		
IC1		*	M54927P	IC(FREQ SYNTHESIZER PLL)		
IC2			M54459L	IC(PRE SCALER)		
IC3			SN74LS90N	IC(DECADE COUNRERS)		
IC4		*	M54927P	IC(FREQ SYNTHESIZER PLL)		
IC5			M54460L	IC(PRE SCALER)		
IC6			SN16913P	IC(DUBLE BALANCED MIXERS)		
IC7			SN74LS90N	IC(DECADE COUNRERS)		
IC8			M74LS93P	IC		
IC9 -11			SN16913P	IC(DUBLE BALANCED MIXERS)		
IC12			SN76514N	IC		
IC13			MB87006	IC(FREQ SYNTHESIZER PLL)		
IC14		*	M54927P	IC(FREQ SYNTHESIZER PLL)		
IC15			PST520D	IC(LOW POWER RESET)		
IC16			TC4069UBP	IC(INVERTER X6)		

FOR SERVICE MANUALS
CONTACT:
MAURITRON TECHNICAL SERVICES
www.mauritron.co.uk
TEL: 01844 - 351694
FAX: 01844 - 352554

E: Scandinavia & Europe K: USA P: Canada
U: PX(Far East, Hawaii) T: England M: Other Areas
UE: AAFES(Europe) X: Australia

A : TS-140S (K,M,T,W)
B : TS-680S (K)

⚠ indicates safety critical components.

PARTS LIST

× New Parts
Parts without Parts No. are not supplied.
Les articles non mentionnes dans le Parts No. ne sont pas fournis.
Teile ohne Parts No. werden nicht geliefert.

Ref. No. 参照番号	Address 位置	New Parts 新	Parts No. 部品番号	Description 部品名／規格	Destination 仕向	Remarks 備考
IC17		*	NE555C	IC(TIMER)		
IC18		*	BU1840OA	IC(CPU)		
IC19			SN74LS138N	IC(DECODERS)		
IC20		*	TC5S10CPL-20	RAM IC		
IC21		*	27C128-25JAJ2	ROM IC(MBM)		
IC22-24			TMP8255AP-5	IC(PROGRAMMABLE INTERFACE)		
IC25			TC4069UBP	IC(INVERTER X6)		
IC26		*	LZ92K37	IC(COUNTER)		
IC27			MB4052	IC(4CH 8BIT A/D CONVERTER(ADC)		
Q1 ,2			2SC2668(Y)	TRANSISTOR		
Q3			2SC2458(Y)	TRANSISTOR		
Q4			2SC1959(Y)	TRANSISTOR		
Q5 ,6			2SC2668(Y)	TRANSISTOR		
Q7 ,8			2SC2458(Y)	TRANSISTOR		
Q9			2SC2787(L)	TRANSISTOR		
Q10 -15			2SC2668(Y)	TRANSISTOR		
Q16 -21			2SC2459(BL)	TRANSISTOR		
Q22 -24			2SC2668(Y)	TRANSISTOR		
Q25			DTA124ES	DIGITAL TRANSISTOR		
Q26			DTC124ES	DIGITAL TRANSISTOR		
Q27 -29			DTA143ES	DIGITAL TRANSISTOR		
Q30 -40			DTC144WS	DIGITAL TRANSISTOR		
Q41 -43			DTC143TS	DIGITAL TRANSISTOR		
DISPLAY UNIT (X54-3050-XX) -00 : TS-140S(K, M, T), TS-680S -61 : TS-140S(W)						
D18			B30-0855-05	LED(RED) ON AIR		
D19			B30-0857-05	LED(YLW) M.SCR		
D20 ,21			B30-0856-05	LED(GRN) F.LOCK,1MHZ		
C1 ,2			CK73FF1E104Z	CHIP C 0.10UF Z		
C3			CK73FB1H103K	CHIP C 0.010UF K		
C4			CK73FF1E104Z	CHIP C 0.10UF Z		
C5			C91-0119-05	CERAMIC 0.047UF K		
C6			CK73FF1E104Z	CHIP C 0.10UF Z		
C7 ,8			CK73FB1H103K	CHIP C 0.010UF K		
C9			CE04EW1C220M	ELECTRN 22UF 16WV		
C10			CE04EW1H100M	ELECTRN 10UF 50WV		
C11			CE04EW1H470M	ELECTRN 47UF 50WV		
C12			CK73FF1H473Z	CHIP C 0.047UF Z		
C13			C90-2009-05	ELECTRN 470UF 16WV		
C14 ,15			CK73FF1E104Z	CHIP C 0.10UF Z		
C16			CK73FB1H103K	CHIP C 0.010UF K		
C21			C91-0105-05	CERAMIC 0.0047UF K		
C22			CE04EW1H470M	ELECTRN 47UF 50WV		
TC1 ,2			C05-0315-05	TRIMMING CAP (60PF)	W	
CN1			E40-3237-05	PIN CONNECTOR (2P)		
CN2 ,3		*	E40-5131-05	FPC CONNECTOR (16P)		
CN4			E40-5133-05	FPC CONNECTOR (18P)		
CN5			E40-3252-05	PIN CONNECTOR		
J1	1H		E06-0858-05	CYLINDRICAL RECEPTACLE(8P,MIC)		
A1			F10-1344-04	SHIELDING PLATE		
"		*	G13-0862-04	CUSHION		
		*	J19-1427-03	HOLDER		

E: Scandinavia & Europe K: USA P: Canada
U: PX(Far East, Hawaii) T: England M: Other Areas
UE: AAFES(Europe) X: Australia

A : TS-140S (K,M,T,W)
B : TS-680S (K)

⚠ indicates safety critical components.

PARTS LIST

* New Parts
Parts without Parts No. are not suppiled.
Les articles non mentionnes dans le Parts No. ne sont pas fournis.
Telle ohne Parts No. werden nicht geliefert.

Ref. No. 参照番号	Address 位置	New Parts 新	Parts No. 部品番号	Description 部品名／規格	Destination 仕向	Remarks 備考
L1 -3			L40-1011-13	SMALL FIXED INDUCTOR		
L4			L40-2292-14	SMALL FIXED INDUCTOR	W	
L5			L40-2792-14	SMALL FIXED INDUCTOR	W	
CP1			R90-0462-05	MULTI-COMP 47KX8 J 1/4W		
CP2			R90-0274-05	MULTI-COMP 47KX5 J 1/6W		
CP3			R90-0462-05	MULTI-COMP 47KX8 J 1/4W		
R2			RD41FB2B222J	CYLND CHIP R 2.2K J 1/8W		
R5			RD41FB2B562J	CYLND CHIP R 5.6K J 1/8W		
R6			RD41FB2B152J	CYLND CHIP R 1.5K J 1/8W		
R7			RD41FB2B102J	CYLND CHIP R 1.0K J 1/8W		
R8			RD41FB2B101J	CYLND CHIP R 100 J 1/8W		
R9			RD41FB2B152J	CYLND CHIP R 1.5K J 1/8W		
R10			RD41FB2B102J	CYLND CHIP R 1.0K J 1/8W		
R11			RD41FB2B101J	CYLND CHIP R 100 J 1/8W		
R12			RD41FB2B471J	CYLND CHIP R 470 J 1/8W		
R13 -15			RD41FB2B560J	CYLND CHIP R 56 J 1/8W		
R16			RD41FB2B471J	CYLND CHIP R 470 J 1/8W		
VR1		*	R13-1402-05	SLIDE TYPE POT(1K,1K)POWER		
VR2 ,3		*	R13-3405-05	SLIDE TYPE POT(10K)MIC,RF GAIN		
VR4		*	R13-1402-05	SLIDE TYPE POT(1K,1K)NB		
VR5			R12-3129-05	TRIMMING POT. (22K)		
S1 -6			S40-2440-15	PUSH SWITCH		
S7			S31-2409-05	SLIDE SWITCH (CW)		
S8 ,9			S40-2440-15	PUSH SWITCH		
S10 -20			S50-1412-05	TACT SWITCH		
S21			S40-2441-15	PUSH SWITCH (1MHZ)		
S22 -24			S50-1412-05	TACT SWITCH		
S25			S40-2441-15	PUSH SWITCH (RIT)		
-		*	FIP12TM7	FLUORESCENT INDICATOR TUBE		
D1 -16			RLS73	CHIP DIODE		
D17		*	RLZJ8.2A	CHIP ZENER DIODE		
IC1			UPD6300C	IC(FL LATCH DRIVER)		
Q1			DTA114EK	DIGITAL TRANSISTOR		
S26			W02-0388-05	ENCODER ASSY		
Z1		*	W02-0804-05	ELECTRIC UNIT		
SIGNAL UNIT (X57-3190-00) : TS-680S (X57-3200-XX) -10 : TS-140S(K, M, T) -61 : TS-140S(W)						
C2			CK73EF1E474Z	CHIP C 0.47UF Z		
C3			CK41FY1E152M	CYLND CHIP C 1500PF M		
C4			CK73FB1H272K	CHIP C 2700PF K		
C5			CK41FY1E152M	CYLND CHIP C 1500PF M		
C6 ,7			CK73EF1E474Z	CHIP C 0.47UF Z		
C9			CE04EW1H010M	ELECTRO 1.0UF 50WV		
C10 ,11			CK41FB1H471K	CYLND CHIP C 470PF K		
C13			CK41FY1E152M	CYLND CHIP C 1500PF M		
C14			CK73FB1H122K	CHIP C 1200PF K		
C16			CE04EW1H010M	ELECTRO 1.0UF 50WV		
C17			CC41FCH1H150J	CYLND CHIP C 15PF J		
C23			CC41FSL1H820J	CYLND CHIP C 82PF J		
C24			CC41FCH1H220J	CYLND CHIP C 22PF J		
C25			CC41FSL1H121J	CYLND CHIP C 120PF J		
C27			CC41FSL1H390J	CYLND CHIP C 39PF J		
C28 ,29			CK41FW1H681M	CYLND CHIP C 680PF M		
C31			CE04EW1H010M	ELECTRO 1.0UF 50WV		

FOR SERVICE MANUALS
CONTACT:
MAURITRON TECHNICAL SERVICES
www.mauritron.co.uk
TEL: 01844 - 351694
FAX: 01844 - 352554

E: Scandinavia & Europe K: USA P: Canada
U: PX(Far East, Hawaii) T: England M: Other Areas
UE : AAFES(Europe) X: Australia

A : TS-140S (K,M,T,W)
B : TS-680S (K)

⚠ indicates safety critical components.

PARTS LIST

× New Parts
Parts without Parts No. are not supplied.
Les articles non mentionnes dans le Parts No. ne sont pas fournis.
Telle ohne Parts No. werden nicht geliefert.

Ref. No. 参照番号	Address 位置	New Parts 新	Parts No. 部品番号	Description 部品名／規格	Destination 仕向	Remarks 備考
C32			CK41FW1H681M	CYLND CHIP C 680PF M		
C33			CK41FB1H471K	CYLND CHIP C 470PF K		
C35			CE04EW1H010M	ELECTRO 1.0UF 50WV		
C36 ,37			CK73EF1E474Z	CHIP C 0.47UF Z		
C38			CK73EF1E474Z	CHIP C 0.47UF Z		B
C39			CK73EF1E474Z	CHIP C 0.47UF Z		
C47			CK41FB1H271K	CYLND CHIP C 270PF K		
C48			CK41FB1H471K	CYLND CHIP C 470PF K		
C51			CE04EW1H010M	ELECTRO 1.0UF 50WV		
C52			CC41FSL1H151J	CYLND CHIP C 150PF J		
C53			CK41FA1H181K	CYLND CHIP C 180PF K		
C55			CE04EW1H010M	ELECTRO 1.0UF 50WV		
C56			CK41FY1E222M	CYLND CHIP C 2200PF M		
C57			CC41FSL1H330J	CYLND CHIP C 33PF J		B
C58			CK41FY1E222M	CYLND CHIP C 2200PF M		B
C60			CC41FSL1H560J	CYLND CHIP C 56PF J		B
C62			CE04EW1H010M	ELECTRO 1.0UF 50WV		B
C64			CC41FCH1H120J	CYLND CHIP C 12PF J		B
C67			CC41FSL1H270J	CYLND CHIP C 27PF J		B
C70			CC45SL1H151J	CERAMIC 150PF J		
C71			CK41FA1H181K	CYLND CHIP C 180PF K		
C72			CC45SL1H151J	CERAMIC 150PF J		
C74			CE04EW1H010M	ELECTRO 1.0UF 50WV		
C76			CC41FCH1H050C	CYLND CHIP C 5.0PF C		
C77			CE04EW1E470M	ELECTRO 47UF 25WV		
C78			CC41FCH1H220J	CYLND CHIP C 22PF J		
C79			CC73FCH1H330J	CHIP C 33PF J		
C82			CC41FCH1H050C	CYLND CHIP C 5.0PF C		
C83			CE04EW1E470M	ELECTRO 47UF 25WV		
C84			CC41FCH1H100D	CYLND CHIP C 10PF D		
C85			CC41FCH1H220J	CYLND CHIP C 22PF J		
C89 ,89			CC41FCH1H050C	CYLND CHIP C 5.0PF C		
C90			CC41FCH1H180J	CYLND CHIP C 18PF J		
C91			CE04EW1E470M	ELECTRO 47UF 25WV		
C94			C91-0119-05	CERAMIC 0.047UF K		
C95			CC41FCH1H220J	CYLND CHIP C 22PF J		B
C96			CE04EW1E470M	ELECTRO 47UF 25WV		B
C98			CC41FCH1H150J	CYLND CHIP C 15PF J		B
C101			CK73FB1E223K	CHIP C 0.022UF K		
C103			CC41FCH1H180J	CYLND CHIP C 18PF J		
C104			CC41FCH1H220J	CYLND CHIP C 22PF J		
C107			CC41FSL1H330J	CYLND CHIP C 33PF J		
C112			CC41FSL1H820J	CYLND CHIP C 82PF J		B
C113			CC41FCH1H150J	CYLND CHIP C 15PF J		B
C116,117			CK73FB1H472K	CHIP C 4700PF K		
C121			CC41FCH1H060D	CYLND CHIP C 6.0PF D		
C122			CC41FCH1H020C	CYLND CHIP C 2.0PF C		
C123			CC41FCH1H040C	CYLND CHIP C 4.0PF C		
C128,129			CK73FB1H472K	CHIP C 4700PF K		
C132			CK73FB1E223K	CHIP C 0.022UF K		
C145,146			CC41FCH1H100D	CYLND CHIP C 10PF D		
C164,165			CE04EW1HR22M	ELECTRO 0.22UF 50WV		
C166			CE04EW1E470M	ELECTRO 47UF 25WV		
C171			CC41FCH1H150J	CYLND CHIP C 15PF J		
C173			CE04EW1HR47M	ELECTRO 0.47UF 50WV		

E: Scandinavia & Europe K: USA P: Canada
U: PX(Far East, Hawaii) T: England M: Other Areas
UE: AAFES(Europe) X: Australia

A : TS-140S (K,M,T,W)
B : TS-680S (K)

⚠ indicates safety critical components.

PARTS LIST

* New Parts
Parts without Parts No. are not supplied.
Les articles non mentionnes dans le Parts No. ne sont pas fournis.
Teile ohne Parts No. werden nicht geliefert.

Ref. No. 参照番号	Address 位置	New Parts 新	Parts No. 部品番号	Description 部品名／規格	Destination 仕向	Remarks 備考
C174			CE04EW1H010M	ELECTRO 1.0UF 50WV		
C176			CE04EW1HR47M	ELECTRO 0.47UF 50WV		
C177			CC41FSL1H101J	CYLND CHIP C 100PF J		
C187,188			CE04EW1H010M	ELECTRO 1.0UF 50WV		
C190			CC41FSL1H101J	CYLND CHIP C 100PF J		
C194			CE04EW1H2R2M	ELECTRO 2.2UF 50WV		
C198			CC41FCH1H120J	CYLND CHIP C 12PF J		
C201			C90-2022-05	NS 22UF 16WV		
C202			CC41FSL1H101J	CYLND CHIP C 100PF J		
C203			CE04EW1H100M	ELECTRO 10UF 50WV		
C204,205			CC41FSL1H470J	CYLND CHIP C 47PF J		
C206,207			CK41FB1H221K	CYLND CHIP C 220PF K		
C209			CE04EW1H100M	ELECTRO 10UF 50WV		
C210			CE04EW1H010M	ELECTRO 1.0UF 50WV		
C211			CK73FB1E473M	CHIP C 0.047UF M		A
C212			CK73FF1E473Z	CHIP C 0.047UF Z		
C213			CE04EW1E470M	ELECTRO 47UF 25WV		
C214			CE04EW1HOR1M	ELECTRO 0.1UF 50WV		
C215			CE04EW1H100M	ELECTRO 10UF 50WV		
C216,217			CK73FB1H472K	CHIP C 4700PF K		
C218			CE04EW1H100M	ELECTRO 10UF 50WV		
C219			C90-0866-05	ELECTRO 470UF 6.3WV		
C220			CE04EW1C102M	ELECTRO 1000UF 16WV		
C221			CK73FB1E223K	CHIP C 0.022UF K		
C224			CE04EW1A221M	ELECTRO 220UF 10WV		
C226			CK41FY1E222M	CYLND CHIP C 2200PF M		
C227			CK41FB1H471K	CYLND CHIP C 470PF K		
C229			CK41FY1E152M	CYLND CHIP C 1500PF M		
C230			CK73FB1E223K	CHIP C 0.022UF K		
C232			CE04EW1E220M	ELECTRO 22UF 25WV		
C233			CK73FB1H562K	CHIP C 5600PF K		
C234			CK73FB1E223K	CHIP C 0.022UF K		
C235			CC41FSL1H470J	CYLND CHIP C 47PF J		
C236			CE04EW1E220M	ELECTRO 22UF 25WV		
C237			CE04EW1HR47M	ELECTRO 0.47UF 50WV		
C238			CE04EW1E330M	ELECTRO 33UF 25WV		
C239			CE04EW1H100M	ELECTRO 10UF 50WV		
C240			CE04EW1H010M	ELECTRO 1.0UF 50WV		
C241,242			CE04EW1E470M	ELECTRO 47UF 25WV		
C243			CE04EW1H010M	ELECTRO 1.0UF 50WV		
C244			CE04EW1H100M	ELECTRO 10UF 50WV		
C245			CK73FB1H123K	CHIP C 0.012UF K		
C247,248			CE04EW1E470M	ELECTRO 47UF 25WV		
C249			CE04EW1H4R7M	ELECTRO 4.7UF 50WV		
C252			CK45E2H222P	CERAMIC 2200PF P		
C254			CE04EW1E330M	ELECTRO 33UF 25WV		
C258,259			CK73FB1H472K	CHIP C 4700PF K		
C261-264			CK73FB1H472K	CHIP C 4700PF K		
C266			CK73FB1H472K	CHIP C 4700PF K		
C268			CC41FSL1H680J	CYLND CHIP C 68PF J		
C271			CK73FB1E223K	CHIP C 0.022UF K		
C273			CK73FB1E223K	CHIP C 0.022UF K		
C278			CC41FSL1H330J	CYLND CHIP C 33PF J		B
C279			CC41FSL1H820J	CYLND CHIP C 82PF J		B
C280			CC41FSL1H270J	CYLND CHIP C 27PF J		B

E: Scandinavia & Europe K: USA P: Canada
U: PX(Far East, Hawaii) T: England M: Other Areas
UE: AAFES(Europe) X: Australia

A : TS-140S (K,M,T,W)
B : TS-680S (K)

⚠ indicates safety critical components.

FOR SERVICE MANUALS
CONTACT:
MAURITRON TECHNICAL SERVICES
www.mauritron.co.uk
TEL: 01844 - 351894
FAX: 01844 - 352554

PARTS LIST

× New Parts
Parts without Parts No. are not supplied.
Les articles non mentionnes dans le Parts No. ne sont pas fournis.
Teile ohne Parts No. werden nicht geliefert.

Ref. No. 参照番号	Address 位置	New Parts 新	Parts No. 部品番号	Description 部品名／規格	Destination 仕向	Remarks 備考
C281			CC41FSL1H121J	CYLND CHIP C 120PF J		B
C282			CC41FSL1H470J	CYLND CHIP C 47PF J		B
C287			CC41FSL1H470J	CYLND CHIP C 47PF J		
C288			CC41FSL1H270J	CYLND CHIP C 27PF J		
C289			CC41FSL1H121J	CYLND CHIP C 120PF J		
C290			CC41FSL1H330J	CYLND CHIP C 33PF J		
C291			CC41FSL1H390J	CYLND CHIP C 39PF J		
C294			CK73FB1E223K	CHIP C 0.022UF K		
C295			CE04EW1H100M	ELECTRN 10UF 50WV		
C297			CK73FB1H472K	CHIP C 4700PF K		
C301			CC41FSL1H470J	CYLND CHIP C 47PF J		
C308			CE04EW1H4R7M	ELECTRN 4.7UF 50WV		
C309			CE04EW1H010M	ELECTRN 1.0UF 50WV		
C312			CE04EW1H100M	ELECTRN 10UF 50WV		
C314			CE04EW1HR47M	ELECTRN 0.47UF 50WV		
C315			CE04EW1E470M	ELECTRN 47UF 25WV		
C316			CE04EW1H4R7M	ELECTRN 4.7UF 50WV		
C318			CE04EW1HR47M	ELECTRN 0.47UF 50WV		
C319,320			CE04EW1H100M	ELECTRN 10UF 50WV		
C322			CE04EW1HR47M	ELECTRN 0.47UF 50WV		
C326			CE04EW1C102M	ELECTRN 1000UF 16WV		
C327			CE04EW1E470M	ELECTRN 47UF 25WV		
C330			CE04EW1E470M	ELECTRN 47UF 25WV		
C334			CC41FSL1H470J	CYLND CHIP C 47PF J		B
C336			CE04EW1H4R7M	ELECTRN 4.7UF 50WV		
C338			CK73FB1E223K	CHIP C 0.022UF K		
C340			CK41FY1B682M	CYLND CHIP C 6800PF M		
C354			CE04EW1H4R7M	ELECTRN 4.7UF 50WV		
C356			CC41FSL1H470J	CYLND CHIP C 47PF J		B
C357			CE04EW1A101M	ELECTRN 100UF 10WV		
C358			CE04EW1H010M	ELECTRN 1.0UF 50WV		
C359			CK73FF1E473Z	CHIP C 0.047UF Z		
C362			CC41FSL1H101J	CYLND CHIP C 100PF J		
C363			CC41FCH1H180J	CYLND CHIP C 18PF J		
C365			CC41FCH1H040C	CYLND CHIP C 4.0PF C		
C367			CC41FSL1H470J	CYLND CHIP C 47PF J		
C368			CC41FSL1H151J	CYLND CHIP C 150PF J		B
C369			CK73EF1C105Z	CHIP C 1.0UF Z		
C370			CC41FCH1H040C	CYLND CHIP C 4.0PF C		
C372			C91-0119-05	CERAMIC 0.047UF K		
C373			CE04EW1E101M	ELECTRN 100UF 25WV		
C374			C91-0117-05	CERAMIC 0.01UF K		
C376			CK73FB1E473M	CHIP C 0.047UF M		
C501			CE04EW1H100M	ELECTRN 10UF 50WV		A
C502			CE04EW1E470M	ELECTRN 47UF 25WV		A
C505			CK73FF1E473Z	CHIP C 0.047UF Z		A
CN1 ,2			E40-5131-05	FPC CONNECTOR (16P)		
CN3			E40-5141-05	FPC CONNECTOR (26P)		
CN4			E40-3238-05	PIN CONNECTOR (3P)		
CN5			E40-3242-05	PIN CONNECTOR (7P)		
CN6		×	E31-3320-05	CONNECTING WIRE(VCV)		
CN7			E40-3237-05	PIN CONNECTOR (2P)		
CN8			E40-3239-05	PIN CONNECTOR (4P)		
CN9			E40-3241-05	PIN CONNECTOR (6P)		

E: Scandinavia & Europe K: USA P: Canada
U: PX(Far East, Hawaii) T: England M: Other Areas
UE: AAFES(Europe) X: Australia

A : TS-140S (K,M,T,W)
B : TS-680S (K)

⚠ indicates safety critical components.

PARTS LIST

* New Parts
Parts without Parts No. are not supplied.
Les articles non mentionnes dans le Parts No. ne sont pas fournis.
Telle ohne Parts No. werden nicht geliefert.

Ref. No. 参照番号	Address 位置	New Parts 新	Parts No. 部品番号	Description 部品名／規格	Destination 仕向	Remarks 備考
CN10			E40-3240-05	PIN CONNECTOR (5P)		
CN11			E40-3238-05	PIN CONNECTOR (3P)		
CN12			E40-3237-05	PIN CONNECTOR (2P)		
CN13			E40-3239-05	PIN CONNECTOR (4P)		
CN14			E40-3237-05	PIN CONNECTOR (2P)		
CN15			E40-5067-05	PIN CONNECTOR (10P)		
CN16			E40-3237-05	PIN CONNECTOR (2P)		
CN17			E40-3239-05	PIN CONNECTOR (4P)		
CN18,19			E40-3237-05	PIN CONNECTOR (2P)		
CN20-22			E04-0157-05	RF COAXIAL CABLE RECEPTACLE		
CN23			E06-0752-05	CYLINDRICAL RECEPTACLE(REMOTE)		
CN24			E11-0418-05	PHONE JACK (KEY)		
CN25			E11-0414-05	PHONE JACK (EXT.SP)		
CN26		*	E06-0859-05	CYLINDRICAL RECEPTACLE(ACC3)		
CN27			E40-3266-05	PIN CONNECTOR (8P)		
CN28			E06-1351-05	CYLINDRICAL RECEPTACLE(ACC2)		
CN501			E40-3237-05	PIN CONNECTOR (2P)		A
TP1			E23-0512-05	TERMINAL		
TP2 ,3			E23-0465-05	TERMINAL		
A1		*	F11-1071-14	SHIELDING CASE		
A2		*	F11-1072-14	SHIELDING CASE		
A3 ,4		*	F11-1073-04	SHIELDING CASE		
A5			F10-1344-04	SHIELDING PLATE		
A6		*	F02-0435-04	HEAT SINK		
A9		*	F10-1376-04	SHIELDING PLATE		
-			G02-0574-04	FLAT SPRING		
CF1			L72-0356-05	CERAMIC FILTER (SSB)		
CF2			L72-0355-05	CERAMIC FILTER (AM)		
CF3			L72-0315-05	CERAMIC FILTER (FM)		
L1		*	L34-4046-15	COIL		
L2			L40-8291-17	SMALL FIXED INDUCTOR(8.2UH)		
L3			L40-1001-17	SMALL FIXED INDUCTOR(10UH)		
L4 ,5			L40-1021-14	SMALL FIXED INDUCTOR(1MH)		
L6			L40-1592-17	SMALL FIXED INDUCTOR(1.5UH)		
L7			L40-2292-17	SMALL FIXED INDUCTOR(2.2UH)		
L8			L40-3391-17	SMALL FIXED INDUCTOR(3.3UH)		
L9			L40-2292-17	SMALL FIXED INDUCTOR(2.2UH)		
L10			L40-5691-17	SMALL FIXED INDUCTOR(5.6UH)		
L11			L40-1021-14	SMALL FIXED INDUCTOR(1MH)		
L12			L40-2282-17	SMALL FIXED INDUCTOR(0.22UH)		
L13			L40-3382-17	SMALL FIXED INDUCTOR(0.33UH)		
L14			L40-2282-17	SMALL FIXED INDUCTOR(0.22UH)		
L15 ,16			L40-3991-17	SMALL FIXED INDUCTOR(3.3UH)		
L17			L40-4791-17	SMALL FIXED INDUCTOR(4.7UH)		
L18			L40-1021-14	SMALL FIXED INDUCTOR(1MH)		
L20			L40-1021-14	SMALL FIXED INDUCTOR(1MH)		
L21			L40-2292-17	SMALL FIXED INDUCTOR(2.2UH)		
L22			L40-1592-17	SMALL FIXED INDUCTOR(1.5UH)		
L23			L40-2292-17	SMALL FIXED INDUCTOR(2.2UH)		
L24			L40-1021-14	SMALL FIXED INDUCTOR(1MH)		
L25 ,26			L40-2282-17	SMALL FIXED INDUCTOR(0.22UH)		
L27			L40-3982-17	SMALL FIXED INDUCTOR(0.39UH)		
L28			L40-1292-17	SMALL FIXED INDUCTOR(1.2UH)		

FOR SERVICE MANUALS
CONTACT:
MAURITRON TECHNICAL SERVICES
www.mauritron.co.uk
TEL: 01844 - 351694
FAX: 01844 - 352554

E: Scandinavia & Europe K: USA P: Canada
U: PX(Far East, Hawaii) T: England M: Other Areas
UE: AAFES(Europe) X: Australia

A : TS-140S (K,M,T,W)
B : TS-680S (K)

⚠ indicates safety critical components.

PARTS LIST

* New Parts
Parts without Parts No. are not supplied.
Les articles non mentionnes dans le Parts No. ne sont pas fournis.
Telle ohne Parts No. werden nicht geliefert.

Ref. No. 参照番号	Address 位置	New Parts 新	Parts No. 部品番号	Description 部品名／規格	Destination 仕向	Remarks 備考
L29			L40-6882-17	SMALL FIXED INDUCTOR(0.68UH)		
L31			L40-1292-17	SMALL FIXED INDUCTOR(1.2UH)		
L32			L40-1021-14	SMALL FIXED INDUCTOR(1MH)		
L33			L40-4782-17	SMALL FIXED INDUCTOR(0.47UH)		
L34			L40-3982-17	SMALL FIXED INDUCTOR(0.39UH)		
L35			L40-4782-17	SMALL FIXED INDUCTOR(0.47UH)		
L36			L40-1021-14	SMALL FIXED INDUCTOR(1MH)		
L37			L34-4002-05	COIL		B
L38			L40-1001-17	SMALL FIXED INDUCTOR(10UH)		B
L39			L40-4701-17	SMALL FIXED INDUCTOR(47UH)		
L40 ,41		*	L34-1204-05	COIL (8T)		B
L42			L34-4002-05	COIL		B
L44			L40-1092-17	SMALL FIXED INDUCTOR(10H)		A
L45			L40-1001-17	SMALL FIXED INDUCTOR(10UH)		B
L46		*	L34-4046-15	COIL		
L47			L34-1162-05	COIL (6T)		B
L48			L19-0344-05	TOROIDAL COIL		
L49			L19-0324-05	TOROIDAL COIL		
L50 ,51			L40-1011-14	SMALL FIXED INDUCTOR(100UH)		
L52			L34-2267-05	COIL		
L53		*	L34-4047-05	COIL		
L54 ,55		*	L34-4048-05	COIL		
L56			L40-1001-17	SMALL FIXED INDUCTOR(10UH)		
L57		*	L34-4049-05	COIL		
L58			L40-1011-17	SMALL FIXED INDUCTOR(100UH)		
L59 ,60			L34-0664-05	COIL		
L61			L40-1021-14	SMALL FIXED INDUCTOR(1MH)		
L64			L34-2124-05	COIL		
L65			L34-0945-05	COIL		
L66			L40-6825-04	SMALL FIXED INDUCTOR(6.8MH)		
L67			L40-2201-14	SMALL FIXED INDUCTOR(22UH)		
L68			L32-0198-05	COIL		
L69			L40-1801-14	SMALL FIXED INDUCTOR(18UH)		
L70			L32-0649-05	COIL		
L71			L40-1501-14	SMALL FIXED INDUCTOR(4.7UH)		B
L72			L32-0639-05	COIL		
L73			L40-4791-14	SMALL FIXED INDUCTOR(10UH)		
L74			L32-0666-15	COIL		B
L75			L40-1021-14	SMALL FIXED INDUCTOR(1MH)		
L76			L40-1511-17	SMALL FIXED INDUCTOR(150UH)		
L77			L40-4782-17	SMALL FIXED INDUCTOR(0.47UH)		
L78			L40-1011-14	SMALL FIXED INDUCTOR(100UH)		
L79			L19-0344-05	TOROIDAL COIL		
L80 ,81			L40-1021-14	SMALL FIXED INDUCTOR(1MH)		
L82			L40-1092-17	SMALL FIXED INDUCTOR(10H)		
L83			L40-1021-14	SMALL FIXED INDUCTOR(1MH)		
L84			L34-0540-05	COIL		
L85			L34-0863-05	COIL		
L86			L30-0503-05	COIL		
L87			L40-1021-14	SMALL FIXED INDUCTOR(1MH)		
L88			L40-3391-13	SMALL FIXED INDUCTOR(3.3UH)		
L89			L34-2283-05	COIL		
L90 -93			L40-4701-17	SMALL FIXED INDUCTOR(47UH)		
L94		*	L39-0432-05	TOROIDAL COIL		
L95			L34-2289-05	COIL		

E: Scandinavia & Europe K: USA P: Canada
U: PX(Far East, Hawaii) T: England M: Other Areas
UE: AAFES(Europe) X: Australia

A : TS-140S (K,M,T,W)
B : TS-680S (K)

⚠ indicates safety critical components.

PARTS LIST

* New Parts
Parts without Parts No. are not supplied.
Les articles non mentionnes dans le Parts No. ne sont pas fournis.
Telle ohne Parts No. werden nicht geliefert.

Ref. No. 参照番号	Address 位置	New Parts 新	Parts No. 部品番号	Description 部品名／規格	Destination 仕向	Remarks 備考
L96		*	L39-0440-05	TOROIDAL COIL		
L97		*	L34-4046-15	COIL		
L98			L40-1011-14	SMALL FIXED INDUCTOR(100UH)		B
L99			L40-3382-17	SMALL FIXED INDUCTOR(0.33UH)		
L100			L40-2282-17	SMALL FIXED INDUCTOR(0.22UH)		
L101			L40-1011-14	SMALL FIXED INDUCTOR(100UH)		B
L102		*	L34-1204-05	COIL (8T)		B
L103-105			L34-1162-05	COIL (6T)		B
L106,107			L40-1011-14	SMALL FIXED INDUCTOR(100UH)		B
L108			L40-1011-14	SMALL FIXED INDUCTOR(100UH)		
L109			L40-2292-17	SMALL FIXED INDUCTOR(2.2UH)		
L110			L40-4701-14	SMALL FIXED INDUCTOR(47UH)		
L111			L19-0328-05	TOROIDAL COIL		
L112			L40-1021-14	SMALL FIXED INDUCTOR(1MH)		
L113			L34-2124-05	COIL		
L114			L40-1011-17	SMALL FIXED INDUCTOR(100UH)		
L117			L40-1011-14	SMALL FIXED INDUCTOR(100UH)		
L118-120			L40-2292-17	SMALL FIXED INDUCTOR(2.2UH)		
L121,122			L40-1011-14	SMALL FIXED INDUCTOR(100UH)		
L124,125			L40-1011-14	SMALL FIXED INDUCTOR(100UH)		
L126			L40-1011-17	SMALL FIXED INDUCTOR(100UH)		
L127,128			L40-2282-17	SMALL FIXED INDUCTOR(0.22UH)		
XF1		*	L71-0275-05	MCF		
-			N09-0641-05	SCREW		
CP1			R90-0455-05	MULTI-COMP 4.7KX8		
CP2			R90-0286-05	MULTI-COMP 4.7KX4		
R1			RD41FB2B471J	CYLND CHIP R 470 J 1/8W		
R2			RD41FB2B470J	CYLND CHIP R 47 J 1/8W		
R3			RD41FB2B103J	CYLND CHIP R 10K J 1/8W		
R4			RD41FB2B680J	CYLND CHIP R 68 J 1/8W		
R5			RD41FB2B221J	CYLND CHIP R 220 J 1/8W		
R7			RD41FB2B101J	CYLND CHIP R 100 J 1/8W		
R8			RD41FB2B680J	CYLND CHIP R 68 J 1/8W		
R9			RD41FB2B473J	CYLND CHIP R 47K J 1/8W		
R10 ,11			RD41FB2B101J	CYLND CHIP R 100 J 1/8W		
R12			RD41FB2B473J	CYLND CHIP R 47K J 1/8W		
R13			RD41FB2B471J	CYLND CHIP R 470 J 1/8W		
R14			RD41FB2B101J	CYLND CHIP R 100 J 1/8W		
R15			RD41FB2B473J	CYLND CHIP R 47K J 1/8W		
R16			RD41FB2B101J	CYLND CHIP R 100 J 1/8W		
R17			RD41FB2B473J	CYLND CHIP R 47K J 1/8W		
R18			RD41FB2B101J	CYLND CHIP R 100 J 1/8W		
R19			RD41FB2B473J	CYLND CHIP R 47K J 1/8W		
R20			RD41FB2B101J	CYLND CHIP R 100 J 1/8W		
R21			RD41FB2B473J	CYLND CHIP R 47K J 1/8W		
R22			RD41FB2B221J	CYLND CHIP R 220 J 1/8W		
R23			RD41FB2B330J	CYLND CHIP R 33 J 1/8W		B
R24			RD41FB2B820J	CYLND CHIP R 82 J 1/8W		B
R25			RD41FB2B122J	CYLND CHIP R 1.2K J 1/8W		B
R26			RD41FB2B100J	CYLND CHIP R 10 J 1/8W		B
R27			RD41FB2B473J	CYLND CHIP R 47K J 1/8W		B
R28			RD41FB2B221J	CYLND CHIP R 220 J 1/8W		
R29			RD41FB2B221J	CYLND CHIP R 220 J 1/8W		B
R30			RD41FB2B101J	CYLND CHIP R 100 J 1/8W		B

E: Scandinavia & Europe K: USA P: Canada
U: PX(Far East, Hawaii) T: England M: Other Areas
UE: AAFES(Europe) X: Australia

A : TS-140S (K,M,T,W)
B : TS-680S (K)

⚠ indicates safety critical components.

CONTACT:
MAURITRON TECHNICAL SERVICES
www.mauritron.co.uk
TEL: 01844 - 351694
FAX: 01844 - 352554

PARTS LIST

* New Parts
Parts without Parts No. are not supplied.
Les articles non mentionnes dans le Parts No. ne sont pas fournis.
Teile ohne Parts No. werden nicht geliefert.

Ref. No. 参照番号	Address 位置	New Parts 新	Parts No. 部品番号	Description 部品名／規格	Destination 仕向	Remarks 備考
R31			RD41FB2B122J	CYLND CHIP R 1.2K J 1/8W		B
R32			RD41FB2B102J	CYLND CHIP R 1.0K J 1/8W		B
R34			RD41FB2B103J	CYLND CHIP R 10K J 1/8W		
R35			RD41FB2B152J	CYLND CHIP R 1.5K J 1/8W		
R36			RD41FB2B103J	CYLND CHIP R 10K J 1/8W		B
R37			RD41FB2B152J	CYLND CHIP R 1.5K J 1/8W		B
R38			RD41FB2B472J	CYLND CHIP R 4.7K J 1/8W		B
R39 ,40			RD41FB2B472J	CYLND CHIP R 4.7K J 1/8W		
R41			RD41FB2B103J	CYLND CHIP R 10K J 1/8W		
R42			RD41FB2B472J	CYLND CHIP R 4.7K J 1/8W		B
R43			RD41FB2B101J	CYLND CHIP R 100 J 1/8W		
R44			RD41FB2B223J	CYLND CHIP R 22K J 1/8W		
R45			RD41FB2B103J	CYLND CHIP R 10K J 1/8W		
R46 ,47			RD41FB2B101J	CYLND CHIP R 100 J 1/8W		
R48			RD41FB2B223J	CYLND CHIP R 22K J 1/8W		
R49			RD41FB2B103J	CYLND CHIP R 10K J 1/8W		
R50 ,51			RD41FB2B101J	CYLND CHIP R 100 J 1/8W		
R52			RD41FB2B223J	CYLND CHIP R 22K J 1/8W		
R53			RD41FB2B103J	CYLND CHIP R 10K J 1/8W		
R54			RD41FB2B101J	CYLND CHIP R 100 J 1/8W		
R55			RD41FB2B101J	CYLND CHIP R 100 J 1/8W		B
R56			RD41FB2B223J	CYLND CHIP R 22K J 1/8W		B
R57			RD41FB2B103J	CYLND CHIP R 10K J 1/8W		B
R58			RD41FB2B101J	CYLND CHIP R 100 J 1/8W		B
R59			RD41FB2B102J	CYLND CHIP R 1.0K J 1/8W		
R60			RD41FB2B101J	CYLND CHIP R 100 J 1/8W		
R61			RD41FB2B471J	CYLND CHIP R 470 J 1/8W		
R62 ,63			RD41FB2B103J	CYLND CHIP R 10K J 1/8W		
R64			RD41FB2B330J	CYLND CHIP R 33 J 1/8W		
R65			RD41FB2B271J	CYLND CHIP R 270 J 1/8W		
R66			RD41FB2B151J	CYLND CHIP R 150 J 1/8W		
R67			RD41FB2B220J	CYLND CHIP R 22 J 1/8W		
R68			RD41FB2B470J	CYLND CHIP R 47 J 1/8W		
R69			RD41FB2B681J	CYLND CHIP R 680 J 1/8W		
R70			RD41FB2B472J	CYLND CHIP R 4.7K J 1/8W		
R71			RD41FB2B220J	CYLND CHIP R 22 J 1/8W		
R72			RD41FB2B150J	CYLND CHIP R 15 J 1/8W		
R73 -75			RD41FB2B471J	CYLND CHIP R 470 J 1/8W		
R76 ,77			RD41FB2B821J	CYLND CHIP R 820 J 1/8W		
R78 -80			RD41FB2B102J	CYLND CHIP R 1.0K J 1/8W		
R81			RD41FB2B393J	CYLND CHIP R 39K J 1/8W		
R82			RD41FB2B104J	CYLND CHIP R 100K J 1/8W		
R83			RD41FB2B474J	CYLND CHIP R 470K J 1/8W		
R84			RD41FB2B471J	CYLND CHIP R 470 J 1/8W		
R85			RD41FB2B101J	CYLND CHIP R 100 J 1/8W		
R86			RD41FB2B471J	CYLND CHIP R 470 J 1/8W		
R87 ,88			RD41FB2B151J	CYLND CHIP R 150 J 1/8W		
R89			RD41FB2B101J	CYLND CHIP R 100 J 1/8W		
R91 ,92			RD41FB2B472J	CYLND CHIP R 4.7K J 1/8W		
R93			RD41FB2B333J	CYLND CHIP R 33K J 1/8W		
R94 ,95			RD41FB2B104J	CYLND CHIP R 100K J 1/8W		
R96			RD41FB2B471J	CYLND CHIP R 470 J 1/8W		
R97			RD41FB2B101J	CYLND CHIP R 100 J 1/8W		
R98 -100			RD41FB2B103J	CYLND CHIP R 10K J 1/8W		
R101			RD41FB2B101J	CYLND CHIP R 100 J 1/8W		

E: Scandinavia & Europe K: USA P: Canada
U: PX(Far East, Hawaii) T: England M: Other Areas
UE: AAFES(Europe) X: Australia

A : TS-140S (K,M,T,W)
B : TS-680S (K)

⚠ indicates safety critical components.

PARTS LIST

* New Parts
Parts without Parts No. are not supplied.
Les articles non mentionnes dans le Parts No. ne sont pas fournis.
Teile ohne Parts No. werden nicht geliefert.

Ref. No. 参照番号	Address 位置	New Parts 新	Parts No. 部品番号	Description 部品名／規格	Destination 仕向	Remarks 備考
R102			RD41FB2B682J	CYLND CHIP R 6.8K J 1/8W		
R103,104			RD41FB2B332J	CYLND CHIP R 3.3K J 1/8W		
R105			RD41FB2B472J	CYLND CHIP R 4.7K J 1/8W		
R106			RD41FB2B473J	CYLND CHIP R 47K J 1/8W		
R107			RD41FB2B221J	CYLND CHIP R 220 J 1/8W		
R108			RD41FB2B562J	CYLND CHIP R 5.6K J 1/8W		
R109			RD41FB2B152J	CYLND CHIP R 1.5K J 1/8W		
R110			RD41FB2B472J	CYLND CHIP R 4.7K J 1/8W		
R111			RD41FB2B473J	CYLND CHIP R 47K J 1/8W		
R112			RD41FB2B221J	CYLND CHIP R 220 J 1/8W		
R113			RD41FB2B562J	CYLND CHIP R 5.6K J 1/8W		
R114			RD41FB2B472J	CYLND CHIP R 4.7K J 1/8W		
R115			RD41FB2B473J	CYLND CHIP R 47K J 1/8W		
R116			RD41FB2B221J	CYLND CHIP R 220 J 1/8W		
R117			RD41FB2B562J	CYLND CHIP R 5.6K J 1/8W		
R118			RD41FB2B472J	CYLND CHIP R 4.7K J 1/8W		
R119			RD41FB2B473J	CYLND CHIP R 47K J 1/8W		
R120			RD41FB2B221J	CYLND CHIP R 220 J 1/8W		
R121			RD41FB2B562J	CYLND CHIP R 5.6K J 1/8W		
R122			RD41FB2B103J	CYLND CHIP R 10K J 1/8W		
R123,124			RD41FB2B562J	CYLND CHIP R 5.6K J 1/8W		
R125			RD41FB2B682J	CYLND CHIP R 6.8K J 1/8W		
R126			RD41FB2B104J	CYLND CHIP R 100K J 1/8W		
R127			RD41FB2B333J	CYLND CHIP R 33K J 1/8W		
R128			RD41FB2B471J	CYLND CHIP R 470 J 1/8W		
R129			RD41FB2B101J	CYLND CHIP R 100 J 1/8W		
R130			RD41FB2B103J	CYLND CHIP R 10K J 1/8W		
R131			RD41FB2B333J	CYLND CHIP R 33K J 1/8W		
R132			RD41FB2B104J	CYLND CHIP R 100K J 1/8W		
R133			RD41FB2B471J	CYLND CHIP R 470 J 1/8W		
R134,135			RD41FB2B101J	CYLND CHIP R 100 J 1/8W		
R136,137			RD41FB2B471J	CYLND CHIP R 470 J 1/8W		
R138			RD41FB2B224J	CYLND CHIP R 220K J 1/8W		
R139			RD41FB2B472J	CYLND CHIP R 4.7K J 1/8W		
R140			RD41FB2B101J	CYLND CHIP R 100 J 1/8W		
R141			RD41FB2B332J	CYLND CHIP R 3.3K J 1/8W		
R142			RD41FB2B103J	CYLND CHIP R 10K J 1/8W		
R143			RD41FB2B102J	CYLND CHIP R 1.0K J 1/8W		
R145,146			RD41FB2B472J	CYLND CHIP R 4.7K J 1/8W		
R147			RD41FB2B102J	CYLND CHIP R 1.0K J 1/8W		
R148			RD41FB2B222J	CYLND CHIP R 2.2K J 1/8W		
R149			RD41FB2B682J	CYLND CHIP R 6.8K J 1/8W		
R151			RD41FB2B221J	CYLND CHIP R 220 J 1/8W		
R152			RD41FB2B102J	CYLND CHIP R 1.0K J 1/8W		
R153			RD41FB2B222J	CYLND CHIP R 2.2K J 1/8W		
R154			RD41FB2B153J	CYLND CHIP R 15K J 1/8W		
R155			RD41FB2B333J	CYLND CHIP R 33K J 1/8W		
R156			RD41FB2B683J	CYLND CHIP R 68K J 1/8W		
R157			RD41FB2B223J	CYLND CHIP R 22K J 1/8W		
R158,159			RD41FB2B103J	CYLND CHIP R 10K J 1/8W		
R160			RD41FB2B102J	CYLND CHIP R 1.0K J 1/8W		
R161			RD41FB2B221J	CYLND CHIP R 220 J 1/8W		
R162			RD41FB2B103J	CYLND CHIP R 10K J 1/8W		
R163			RD41FB2B563J	CYLND CHIP R 56K J 1/8W		
R164			RD41FB2B102J	CYLND CHIP R 1.0K J 1/8W		

E: Scandinavia & Europe K: USA P: Canada
U: PX(Far East, Hawaii) T: England M: Other Areas
UE: AAFES(Europe) X: Australia

A : TS-140S (K,M,T,W)
B : TS-680S (K)

⚠ Indicates safety critical components.

FOR SERVICE MANUALS
CONTACT:
MAURITRON TECHNICAL SERVICES
www.mauritron.co.uk
TEL: 01844 - 351694
FAX: 01844 - 352554

PARTS LIST

* New Parts
Parts without Parts No. are not suppiled.
Les articles non mentionnes dans le Parts No. ne sont pas fournis.
Telle ohne Parts No. werden nicht geliefert.

Ref. No. 参照番号	Address 位置	New Parts 新	Parts No. 部品番号	Description 部品名／規格	Destination 仕向	Remarks 備考
R165			RD41FB2B681J	CYLND CHIP R 680 J 1/8W		
R166			RD41FB2B333J	CYLND CHIP R 33K J 1/8W		
R167			RD41FB2B152J	CYLND CHIP R 1.5K J 1/8W		
R168			RD41FB2B333J	CYLND CHIP R 33K J 1/8W		
R169,170			RD41FB2B474J	CYLND CHIP R 470K J 1/8W		
R171			RD41FB2B273J	CYLND CHIP R 27K J 1/8W		
R172			RD41FB2B153J	CYLND CHIP R 15K J 1/8W		
R173			RD41FB2B334J	CYLND CHIP R 330K J 1/8W		
R174			RD41FB2B333J	CYLND CHIP R 33K J 1/8W		
R175			RD41FB2B152J	CYLND CHIP R 1.5K J 1/8W		
R176			RD41FB2B562J	CYLND CHIP R 5.6K J 1/8W		
R177			RD41FB2B682J	CYLND CHIP R 6.8K J 1/8W		
R178			RD41FB2B101J	CYLND CHIP R 100 J 1/8W		
R179			RD41FB2B103J	CYLND CHIP R 10K J 1/8W		
R180			RD41FB2B472J	CYLND CHIP R 4.7K J 1/8W		
R181			RD41FB2B223J	CYLND CHIP R 22K J 1/8W		
R182			RD41FB2B224J	CYLND CHIP R 220K J 1/8W		
R183			RD41FB2B103J	CYLND CHIP R 10K J 1/8W		
R184			RD41FB2B472J	CYLND CHIP R 4.7K J 1/8W		
R185			RD41FB2B682J	CYLND CHIP R 6.8K J 1/8W		
R186			RD41FB2B473J	CYLND CHIP R 47K J 1/8W		
R187			RD41FB2B224J	CYLND CHIP R 220K J 1/8W		
R188			RD41FB2B101J	CYLND CHIP R 100 J 1/8W		
R189			RD41FB2B222J	CYLND CHIP R 2.2K J 1/8W		
R190			RD41FB2B104J	CYLND CHIP R 100K J 1/8W		
R191			RD41FB2B472J	CYLND CHIP R 4.7K J 1/8W		
R192,193			RD41FB2B104J	CYLND CHIP R 100K J 1/8W		
R194			RD41FB2B224J	CYLND CHIP R 220K J 1/8W		
R195			RD41FB2B101J	CYLND CHIP R 100 J 1/8W		
R196,197			RD41FB2B472J	CYLND CHIP R 4.7K J 1/8W		
R198			RD41FB2B103J	CYLND CHIP R 10K J 1/8W		
R199			RD41FB2B223J	CYLND CHIP R 22K J 1/8W		
R200			RD41FB2B104J	CYLND CHIP R 100K J 1/8W		
R201			RD41FB2B101J	CYLND CHIP R 100 J 1/8W		
R202			RD41FB2B222J	CYLND CHIP R 2.2K J 1/8W		
R203			RD41FB2B821J	CYLND CHIP R 820 J 1/8W		
R204			RD41FB2B331J	CYLND CHIP R 330 J 1/8W		
R205			RD41FB2B332J	CYLND CHIP R 3.3K J 1/8W		
R206			RD41FB2B102J	CYLND CHIP R 1.0K J 1/8W		
R207			RD41FB2B103J	CYLND CHIP R 10K J 1/8W		
R208			RD41FB2B472J	CYLND CHIP R 4.7K J 1/8W		
R209			RK73FB2A2R2J	CHIP R 2.2 J 1/10W		
R210			RD41FB2B331J	CYLND CHIP R 330 J 1/8W		
R211			RK73FB2A2R2J	CHIP R 2.2 J 1/10W		
R212			RD41FB2B104J	CYLND CHIP R 100K J 1/8W		
R213			RD41FB2B823J	CYLND CHIP R 82K J 1/8W		
R214			RD41FB2B473J	CYLND CHIP R 47K J 1/8W		
R215,216			RD41FB2B222J	CYLND CHIP R 2.2K J 1/8W		
R217			RD41FB2B102J	CYLND CHIP R 1.0K J 1/8W		
R218			RD41FB2B104J	CYLND CHIP R 100K J 1/8W		
R219			RD41FB2B103J	CYLND CHIP R 10K J 1/8W		
R220			RD41FB2B102J	CYLND CHIP R 1.0K J 1/8W		
R221			RD41FB2B153J	CYLND CHIP R 15K J 1/8W		
R224			RD41FB2B102J	CYLND CHIP R 1.0K J 1/8W		
R225			RD41FB2B821J	CYLND CHIP R 820 J 1/8W		

E: Scandinavia & Europe K: USA P: Canada
U: PX(Far East, Hawaii) T: England M: Other Areas
UE: AAFES(Europe) X: Australia

A : TS-140S (K,M,T,W)
B : TS-680S (K)

⚠ indicates safety critical components.

PARTS LIST

* New Parts
Parts without Parts No. are not supplied.
Les articles non mentionnes dans le Parts No. ne sont pas fournis.
Telle ohne Parts No. werden nicht geliefert.

Ref. No. 参照番号	Address 位置	New Parts 新	Parts No. 部品番号	Description 部品名／規格	Destination 仕向	Remarks 備考
R226,227			RD41FB2B104J	CYLND CHIP R 100K J 1/8W		
R228			RD41FB2B472J	CYLND CHIP R 4.7K J 1/8W		
R229,230			RD41FB2B122J	CYLND CHIP R 1.2K J 1/8W		
R231			RD41FB2B473J	CYLND CHIP R 47K J 1/8W		
R232			RD41FB2B473J	CYLND CHIP R 47K J 1/8W		
R233			RD41FB2B101J	CYLND CHIP R 100 J 1/8W		
R234			RD41FB2B333J	CYLND CHIP R 33K J 1/8W		
R235			RD41FB2B104J	CYLND CHIP R 100K J 1/8W		
R236			RD41FB2B471J	CYLND CHIP R 470 J 1/8W		
R237			RD41FB2B101J	CYLND CHIP R 100 J 1/8W		
R238			RD41FB2B473J	CYLND CHIP R 47K J 1/8W		
R239			RD41FB2B473J	CYLND CHIP R 47K J 1/8W		
R240			RD41FB2B103J	CYLND CHIP R 10K J 1/8W		
R241			RD41FB2B102J	CYLND CHIP R 1.0K J 1/8W		
R242			RD41FB2B101J	CYLND CHIP R 100 J 1/8W		
R243,244			RD41FB2B471J	CYLND CHIP R 470 J 1/8W		
R246~248			RD41FB2B471J	CYLND CHIP R 470 J 1/8W		
R250			RD41FB2B273J	CYLND CHIP R 27K J 1/8W		
R251			RD41FB2B563J	CYLND CHIP R 56K J 1/8W		
R252			RD41FB2B332J	CYLND CHIP R 3.3K J 1/8W		
R253~256			RD41FB2B330J	CYLND CHIP R 33 J 1/8W		
R257			RD41FB2B101J	CYLND CHIP R 100 J 1/8W		
R258			RD41FB2B102J	CYLND CHIP R 1.0K J 1/8W		
R259,260			RD41FB2B152J	CYLND CHIP R 1.5K J 1/8W		B
R261			RD41FB2B332J	CYLND CHIP R 3.3K J 1/8W		
R262			RD41FB2B561J	CYLND CHIP R 560 J 1/8W		
R263			RD14BB2E100J	RD 10 J 1/4W		
R264			RD41FB2B681J	CYLND CHIP R 680 J 1/8W		
R265			RD41FB2B223J	CYLND CHIP R 22K J 1/8W		
R266			RD41FB2B124J	CYLND CHIP R 120K J 1/8W		
R267			RD41FB2B221J	CYLND CHIP R 220 J 1/8W		
R268			RD41FB2B101J	CYLND CHIP R 100 J 1/8W		
R269			RD41FB2B222J	CYLND CHIP R 2.2K J 1/8W		
R270			RD41FB2B101J	CYLND CHIP R 100 J 1/8W		
R271			RD41FB2B471J	CYLND CHIP R 470 J 1/8W		
R272			RD41FB2B103J	CYLND CHIP R 10K J 1/8W		
R273			RD41FB2B471J	CYLND CHIP R 470 J 1/8W		
R274			RD41FB2B101J	CYLND CHIP R 100 J 1/8W		
R275,276			RD41FB2B103J	CYLND CHIP R 10K J 1/8W		
R277			RD14CB2C224J	RD 220K J 1/6W		
R278			RD41FB2B104J	CYLND CHIP R 100K J 1/8W		
R279			RD41FB2B103J	CYLND CHIP R 10K J 1/8W		
R280			RD14BB2C4R7J	RD 4.7 J 1/6W		
R281			RD41FB2B562J	CYLND CHIP R 5.6K J 1/8W		
R282			RD41FB2B332J	CYLND CHIP R 3.3K J 1/8W		
R284			RD41FB2B222J	CYLND CHIP R 2.2K J 1/8W		
R285			RD41FB2B332J	CYLND CHIP R 3.3K J 1/8W		
R286			RD41FB2B101J	CYLND CHIP R 100 J 1/8W		
R287			RD41FB2B473J	CYLND CHIP R 47K J 1/8W		
R288			RD41FB2B103J	CYLND CHIP R 10K J 1/8W		B
R289,290			RD41FB2B103J	CYLND CHIP R 10K J 1/8W		
R291			RD41FB2B472J	CYLND CHIP R 4.7K J 1/8W		
R292			RD41FB2B562J	CYLND CHIP R 5.6K J 1/8W		
R293			RD41FB2B223J	CYLND CHIP R 22K J 1/8W		
R294			RD41FB2B103J	CYLND CHIP R 10K J 1/8W		

E: Scandinavia & Europe K: USA P: Canada
U: PX(Far East, Hawaii) T: England M: Other Areas
UE: AAFES(Europe) X: Australia

A : TS-140S (K,M,T,W)
B : TS-680S (K)

⚠ indicates safety critical components.

PARTS LIST

* New Parts
Parts without Parts No. are not supplied.
Les articles non mentionnes dans le Parts No. ne sont pas fournis.
Telle ohne Parts No. werden nicht geliefert.

Ref. No. 参照番号	Address 位置	New Parts 新	Parts No. 部品番号	Description 部品名／規格	Destination 仕向	Remarks 備考
R295			RD41FB2B102J	CYLND CHIP R 1.0K J 1/8W		
R296			RD41FB2B222J	CYLND CHIP R 2.2K J 1/8W		
R297			RD41FB2B101J	CYLND CHIP R 100 J 1/8W		
R298			RD41FB2B103J	CYLND CHIP R 10K J 1/8W		
R299			RD41FB2B682J	CYLND CHIP R 6.8K J 1/8W		
R300			RD41FB2B563J	CYLND CHIP R 56K J 1/8W		
R301			RD41FB2B472J	CYLND CHIP R 4.7K J 1/8W		
R302			RD41FB2B333J	CYLND CHIP R 33K J 1/8W		
R303			RD41FB2B124J	CYLND CHIP R 120K J 1/8W		
R304			RD41FB2B221J	CYLND CHIP R 220 J 1/8W		
R305			RD41FB2B102J	CYLND CHIP R 1.0K J 1/8W		
R306			RD41FB2B562J	CYLND CHIP R 5.6K J 1/8W		
R307			RD41FB2B223J	CYLND CHIP R 22K J 1/8W		
R308			RD41FB2B683J	CYLND CHIP R 68K J 1/8W		
R309			RD41FB2B821J	CYLND CHIP R 820 J 1/8W		
R310			RD41FB2B272J	CYLND CHIP R 2.7K J 1/8W		
R311			RD41FB2B104J	CYLND CHIP R 100K J 1/8W		
R312			RD41FB2B332J	CYLND CHIP R 3.3K J 1/8W		
R313			RD41FB2B473J	CYLND CHIP R 47K J 1/8W		
R314, 315			RD41FB2B564J	CYLND CHIP R 560K J 1/8W		
R316			RD41FB2B103J	CYLND CHIP R 10K J 1/8W		
R317			RD41FB2B102J	CYLND CHIP R 1.0K J 1/8W		
R318			RD41FB2B104J	CYLND CHIP R 100K J 1/8W		
R319			RD41FB2B103J	CYLND CHIP R 10K J 1/8W		
R320			RD41FB2B473J	CYLND CHIP R 47K J 1/8W		
R321			RD41FB2B104J	CYLND CHIP R 100K J 1/8W		
R322			RD41FB2B473J	CYLND CHIP R 47K J 1/8W		
R323			RD41FB2B104J	CYLND CHIP R 100K J 1/8W		
R324			RD41FB2B473J	CYLND CHIP R 47K J 1/8W		
R325, 326			RD41FB2B104J	CYLND CHIP R 100K J 1/8W		
R327			RD41FB2B103J	CYLND CHIP R 10K J 1/8W		
R328			RD41FB2B102J	CYLND CHIP R 1.0K J 1/8W		
R329, 330			RD41FB2B473J	CYLND CHIP R 47K J 1/8W		
R331			RD41FB2B562J	CYLND CHIP R 5.6K J 1/8W		
R332			RD41FB2B332J	CYLND CHIP R 3.3K J 1/8W		
R333			RD41FB2B224J	CYLND CHIP R 220K J 1/8W		
R334			RD41FB2B562J	CYLND CHIP R 5.6K J 1/8W		
R340			RD41FB2B152J	CYLND CHIP R 1.5K J 1/8W		
R341			RD41FB2B101J	CYLND CHIP R 100 J 1/8W		
R342			RD41FB2B102J	CYLND CHIP R 1.0K J 1/8W		H
R343			RD41FB2B471J	CYLND CHIP R 470 J 1/8W		
R345, 346			RD41FB2B101J	CYLND CHIP R 100 J 1/8W		
R347			RD41FB2B472J	CYLND CHIP R 4.7K J 1/8W		
R348			RD41FB2B224J	CYLND CHIP R 220K J 1/8W		
R349			RD41FB2B473J	CYLND CHIP R 47K J 1/8W		
R350, 352			RD41FB2B102J	CYLND CHIP R 1.0K J 1/8W		
R353, 354			RD41FB2B472J	CYLND CHIP R 4.7K J 1/8W		
R355			RD41FB2B103J	CYLND CHIP R 10K J 1/8W		
R356			RD41FB2B104J	CYLND CHIP R 100K J 1/8W		
R357			RD41FB2B472J	CYLND CHIP R 4.7K J 1/8W		
R359			RD41FB2B222J	CYLND CHIP R 2.2K J 1/8W		
R361			RD41FB2B103J	CYLND CHIP R 10K J 1/8W		
R362			RD41FB2B222J	CYLND CHIP R 2.2K J 1/8W		
R364			RD41FB2B104J	CYLND CHIP R 100K J 1/8W		
R363			RD41FB2B223J	CYLND CHIP R 22K J 1/8W		
R365			RD41FB2B102J	CYLND CHIP R 1.0K J 1/8W		
R366			RD41FB2B472J	CYLND CHIP R 4.7K J 1/8W		

E: Scandinavia & Europe K: USA P: Canada
U: PX(Far East, Hawaii) T: England M: Other Areas
UE: AAFES(Europe) X: Australia

A : TS-140S (K,M,T,W)
B : TS-680S (K)

⚠ indicates safety critical components.

PARTS LIST

* New Parts
Parts without Parts No. are not supplied.
Les articles non mentionnes dans le Parts No. ne sont pas fournis.
Teile ohne Parts No. werden nicht geliefert.

Ref. No. 参照番号	Address 位置	New Parts 新	Parts No. 部品番号	Description 部品名／規格	Destination 仕向	Remarks 備考
R367			RD41FB2B105J	CYLND CHIP R 1.0M J 1/8W		
R368,369			RD41FB2B104J	CYLND CHIP R 100K J 1/8W		
R370			RD14CB2C103J	RD 10K J 1/6W		
R371			RD14BB2C100J	RD 10 J 1/6W		
R372			RD41FB2B332J	CYLND CHIP R 3.3K J 1/8W		
R373			RD41FB2B101J	CYLND CHIP R 100 J 1/8W		
R501~504			RD41FB2B103J	CYLND CHIP R 10K J 1/8W		A
R505			RD41FB2B102J	CYLND CHIP R 1.0K J 1/8W		A
VR1			R12-0435-05	TRIMMING POT. (300)		
VR2			R12-1431-05	TRIMMING POT. (1K)		
VR3 ,4			R12-2414-05	TRIMMING POT. (5K)		
VR5 ,6			R12-3447-05	TRIMMING POT. (10K)		
VR7		*	R05-5401-05	POTENTIOMETER (100K)		
VR8			R12-1432-05	TRIMMING POT. (2K)		
VR9 ,10			R12-7407-05	TRIMMING POT. (500K)		
VR11			R12-7407-05	TRIMMING POT. (500K)		B
VR12			R12-7407-05	TRIMMING POT. (500K)		
VR13			R12-5418-05	TRIMMING POT. (200K)		
VR14			R12-5417-05	TRIMMING POT. (100K)		
VR15			R12-5417-05	TRIMMING POT. (100K)		B
VR16,17			R12-4414-05	TRIMMING POT. (50K)		
VR18			R12-0435-05	TRIMMING POT. (300)		
VR19			R12-1431-05	TRIMMING POT. (1K)		
VR20,21			R12-4414-05	TRIMMING POT. (50K)		
VR22			R12-3448-05	TRIMMING POT. (20K)		
VR23			R12-4414-05	TRIMMING POT. (50K)		
VR24			R12-3447-05	TRIMMING POT. (10K)		
VR25			R12-1431-05	TRIMMING POT. (1K)		
VR26			R12-3447-05	TRIMMING POT. (10K)		
VR501		*	R05-3443-05	POTENTIOMETER (10K)		A
VR502		*	R05-0402-05	POTENTIOMETER (300)		A
W1 ~7			R92-0150-05	JUMPER REST 0 OHM		
W8			R92-1061-05	JUMPER REST 0 OHM		
W9			R92-0150-05	JUMPER REST 0 OHM		
W10			R92-0687-05	CHIP R 0 OHM		B
W11			R92-0687-05	CHIP R 0 OHM		
W12			R92-1061-05	JUMPER REST 0 OHM		
W13 ,14			R92-1061-05	JUMPER REST 0 OHM	W	
W501,502			R92-1061-05	JUMPER REST 0 OHM		A
W503			R92-0687-05	CHIP R 0 OHM		A
W504,505			R92-0338-05	CLYND CHIP R 0 OHM		A
W506			R92-0687-05	CHIP R 0 OHM		A
K1		*	S51-1436-05	RELAY (ATT)		
K2 ,3		*	S51-2422-05	RELAY		B
K4			S51-1432-05	RELAY		
S1			S31-1411-05	SLIDE SWITCH		
S2			S31-1411-05	SLIDE SWITCH		B
D1 ~3		*	DAN235(K)	CHIP DIODE		
D5			US1090	DIODE		
D6			V08(G)	DIODE		
D7 ,8			RLS135	CHIP DIODE		
D9			V08(G)	DIODE		
D10			US1090	DIODE		
D11			RLS135	CHIP DIODE		

FOR SERVICE MANUALS
CONTACT:
MAURITRON TECHNICAL SERVICES
www.mauritron.co.uk
TEL: 01844 - 351694
FAX: 01844 - 352554

E: Scandinavia & Europe K: USA P: Canada
U: PX(Far East, Hawaii) T: England M: Other Areas
UE : AAFES(Europe) X: Australia

A : TS-140S (K,M,T,W)
B : TS-680S (K)

⚠ indicates safety critical components.

PARTS LIST

* New Parts
Parts without Parts No. are not supplied.
Les articles non mentionnes dans le Parts No. ne sont pas fournis.
Teile ohne Parts No. werden nicht geliefert.

Ref. No. 参照番号	Address 位置	New Parts 新	Parts No. 部品番号	Description 部品名／規格	Destination 仕向	Remarks 備考
D12		*	DAN235(K)	CHIP DIODE		
D13 -20			RLS135	CHIP DIODE		
D21 ,22			RLS135	CHIP DIODE		B
D23			1S1555	DIODE		
D24			DAN202(K)	CHIP DIODE		B
D25			1S1555	DIODE		B
D26			DAP202(K)	CHIP DIODE		
D27			RLS73	CHIP DIODE		
D28 ,29			DAP202(K)	CHIP DIODE		
D30			UZ3.0B	ZENER DIODE		
D31			DAP202(K)	CHIP DIODE		B
D33			RLS73	CHIP DIODE		
D34 -37			ITT310TE	VARI-CAP DIODE		
D38			RLS135	CHIP DIODE		
D39 ,40			ITT310TE	VARI-CAP DIODE		
D41			RLS135	CHIP DIODE		
D42 ,43			ITT310TE	VARI-CAP DIODE		B
D44			RLS135	CHIP DIODE		B
D45 ,46			RLS135	CHIP DIODE		
D47			MI204	DIODE		
D48			DAN202(K)	CHIP DIODE		
D49			RLS73	CHIP DIODE		
D50 -53			RLS135	CHIP DIODE		
D54 -56			RLS73	CHIP DIODE		
D57			DAN202(K)	CHIP DIODE		
D58 -60			RLS73	CHIP DIODE		
D61			DAN202(K)	CHIP DIODE		
D62 -67			RLS73	CHIP DIODE		
D68 ,69			DAN202(K)	CHIP DIODE		
D70			RLS73	CHIP DIODE		
D71			HSM88AS	CHIP DIODE		
D72 -74			RLS73	CHIP DIODE		
D75			1N60PSPA	DIODE		
D76			RLS73	CHIP DIODE		
D77			DAN202(K)	CHIP DIODE		
D78			RLS73	CHIP DIODE		
D79 -81			DAN202(K)	CHIP DIODE		
D82			HSM88AS	CHIP DIODE		
D83			RLS73	CHIP DIODE		
D85			DAN202(K)	CHIP DIODE		
D86 ,87			HSM88AS	CHIP DIODE		
D88			RLS73	CHIP DIODE		
D89			DAN202(K)	CHIP DIODE		
D90			1S1555	DIODE		
D91			MTZ9.1JB	ZENER DIODE		
D92			RLS73	CHIP DIODE		
D93			UZ3.0B	ZENER DIODE		
D95			RLS73	CHIP DIODE		
D96			MI204	DIODE		
D97			DAN202(K)	CHIP DIODE		
D98			1N60PSPA	DIODE		
D99 -102			RLS135	CHIP DIODE		
D103-106			RLS135	CHIP DIODE		B
D107			DAN202(K)	CHIP DIODE		
D108			RLS73	CHIP DIODE		

E: Scandinavia & Europe K: USA P: Canada
U: PX(Far East, Hawaii) T: England M: Other Areas
UE: AAFES(Europe) X: Australia

A : TS-140S (K,M,T,W)
B : TS-680S (K)

⚠ indicates safety critical components.

PARTS LIST

* New Parts
Parts without Parts No. are not supplied.
Les articles non mentionnes dans le Parts No. ne sont pas fournis.
Teile ohne Parts No. werden nicht geliefert.

Ref. No. 参照番号	Address 位置	New Parts 新	Parts No. 部品番号	Description 部品名／規格	Destination 仕向	Remarks 備考
D109,110			RLS135	CHIP DIODE		
D111			KB369	VARI-CAP DIODE		
D112-115			RLS73	CHIP DIODE		
D116		*	RLZ3.6B	CHIP ZENER DIODE		
D117			RLS73	CHIP DIODE		
D118			RLS135	CHIP DIODE		
D119			DAN202(K)	CHIP DIODE		
D120			RLS73	CHIP DIODE		
D122			RLS135	CHIP DIODE		
D123			RLS73	CHIP DIODE		
D124			RLS135	CHIP DIODE		
D125		*	RLZ3.6B	CHIP ZENER DIODE		
D126			RLS135	CHIP DIODE		
D127			1SS133	DIODE		B
D128			RLS73	CHIP DIODE		
D129			RLS73	CHIP DIODE		B
D501,502			RLS73	DIODE		A
D503			UZ3.0B	CHIP ZENER DIODE		A
IC1		*	M54581P	IC		
IC2			M74LS145P	IC(DECIMAL DECODER/DRIVER BCD)		
IC3			AN612	IC(BALANCE MODULATOR)		
IC4			UPC2002V	IC(OP AMP X2)		
IC5			SN16913P	IC(DUBLE BALANCED MIXERS)		
IC6			MC3357P	IC(LOW POWER FM IF)		
IC7 -10			TC4066BP	IC(ANALOG/ DIGITAL SW)		
IC11			LM324N	IC(QUAD OP AMP X4)		
IC12			AN7808	IC(VOLTAGE REGULATOR/ +8V)		
Q1			2SA1162(Y)	CHIP TRANSISTOR		
Q2			2SA1162(Y)	CHIP TRANSISTOR		B
Q3 ,4			DTC114EK	DIGITAL TRANSISTOR		B
Q5			DTA143EK	DIGITAL TRANSISTOR		B
Q6 -8			DTA143EK	DIGITAL TRANSISTOR		
Q9 -11			2SC2668(Y)	TRANSISTOR		
Q12			2SK192A(GR)*J	FET		B
Q13			2SC2668(Y)	TRANSISTOR		
Q14			2SC1907	TRANSISTOR		
Q15			2SC2053	TRANSISTOR		
Q16			DTA114EK	DIGITAL TRANSISTOR		
Q17			DTC114EK	DIGITAL TRANSISTOR		
Q18 ,19			2SK125-5	FET		
Q20		*	FMC3	DIGITAL TRANSISTOR		
Q21			3SK122(L)	FET		
Q22 ,23			2SK125-5	FET		
Q27			3SK73(GR)	FET		
Q28			2SA1162(Y)	CHIP TRANSISTOR		
Q29			2SC2712(Y)	CHIP TRANSISTOR		
Q30 ,31			3SK73(GR)	FET		
Q32		*	FMC3	DIGITAL TRANSISTOR		
Q34			DTC114EK	DIGITAL TRANSISTOR		
Q35 -39			DTA143EK	DIGITAL TRANSISTOR		
Q40 -42			2SC2712(Y)	CHIP TRANSISTOR		
Q43 ,44		*	FMC3	DIGITAL TRANSISTOR		
Q45 -54			2SC2712(Y)	CHIP TRANSISTOR		
Q55			DTC114EK	DIGITAL TRANSISTOR		
Q56 -59			2SC2712(Y)	CHIP TRANSISTOR		

FOR SERVICE MANUALS
CONTACT:
MAURITRON TECHNICAL SERVICES
www.mauritron.co.uk
TEL: 01844 - 351694
FAX: 01844 - 352554

E: Scandinavia & Europe K: USA P: Canada
U: PX(Far East, Hawaii) T: England M: Other Areas
UE: AAFES(Europe) X: Australia

A : TS-140S (K,M,T,W)
B : TS-680S (K)

⚠ indicates safety critical components.

PARTS LIST

* New Parts
Parts without **Parts No.** are not supplied.
Les articles non mentionnes dans le **Parts No.** ne sont pas fournis.
Teile ohne **Parts No.** werden nicht geliefert.

Ref. No. 参照番号	Address 位置	New Parts 新	Parts No. 部品番号	Description 部品名／規格	Destination 仕向	Remarks 備考
Q60			2SK192A(Y)	FET		
Q61			2SA1162(Y)	CHIP TRANSISTOR		
Q62			DTC114TK	DIGITAL TRANSISTOR		
Q63			DTC114EK	DIGITAL TRANSISTOR		B
Q64			DTC114TK	DIGITAL TRANSISTOR		B
Q65 -67			DTC114EK	DIGITAL TRANSISTOR		
Q68			2SK192A(Y)	FET		
Q69			2SA1162(Y)	CHIP TRANSISTOR		
Q70			2SK125-5	FET		B
Q71			2SC1907	TRANSISTOR		B
Q72			2SK125-5	FET		B
Q73			2SC1907	TRANSISTOR		B
Q74			2SC2712(Y)	CHIP TRANSISTOR		
Q75			DTC114EK	DIGITAL TRANSISTOR		
Q76			DTA143EK	DIGITAL TRANSISTOR		
Q77			DTC114EK	DIGITAL TRANSISTOR		
Q78			3SK73(GR)	FET		
Q79 ,80			3SK122(L)	FET		
Q81			2SC2053	TRANSISTOR		
Q82		*	FMC3	DIGITAL TRANSISTOR		
Q83			DTC114EK	DIGITAL TRANSISTOR		B
Q84			DTC114EK	DIGITAL TRANSISTOR		
Q85		*	FMC3	DIGITAL TRANSISTOR		B
Q86			3SK73(GR)	FET		
Q87			2SA1162(Y)	CHIP TRANSISTOR		
Q88		*	FMC3	DIGITAL TRANSISTOR		
Q89			2SC2712(Y)	CHIP TRANSISTOR		
Q90			2SA1162(Y)	CHIP TRANSISTOR		
Q91 ,92			DTC114EK	DIGITAL TRANSISTOR		
Q93			DTC114TK	DIGITAL TRANSISTOR		
Q94 ,95			DTC114TK	DIGITAL TRANSISTOR		B
Q96 ,97			DTC114EK	DIGITAL TRANSISTOR		
Q98			2SC2712(Y)	CHIP TRANSISTOR		
Q99			DTC114EK	DIGITAL TRANSISTOR		
TH1 -4			112-502-2	THERMISTOR		
-			X59-1060-00	SIDE TONE UNIT		
-			X59-1080-00	VOX UNIT		A
-		*	X59-3000-02	FM MIC UNIT		
-		*	X59-3340-00	TRX UNIT		
-		*	X59-3350-00	NB2 UNIT		
-		*	X59-3360-00	DELAY TIME UNIT		
SIDE TONE (X59-1060-00)						
C1			CK73FB1E223K	CHIP C 0.022UF K		
C2 -5			CK73FB1H123K	CHIP C 0.012UF K		
C6 -8			CK73FB1E223K	CHIP C 0.022UF K		
-			E23-0471-05	TERMINAL		
R1 ,2			RK73FB2A823J	CHIP R 82K J 1/10W		
R3			RK73FB2A223J	CHIP R 22K J 1/10W		
R4			RK73FB2A472J	CHIP R 4.7K J 1/10W		
R5			RK73FB2A102J	CHIP R 1.0K J 1/10W		
R6			RK73FB2A103J	CHIP R 10K J 1/10W		
R7 ,8			RK73FB2A333J	CHIP R 33K J 1/10W		
R9			RK73FB2A103J	CHIP R 10K J 1/10W		

E: Scandinavia & Europe K: USA P: Canada
U: PX(Far East, Hawaii) T: England M: Other Areas
UE: AAFES(Europe) X: Australia

A : TS-140S (K,M,T,W)
B : TS-680S (K)

⚠ indicates safety critical components.

PARTS LIST

* New Parts
Parts without Parts No. are not supplied.
Les articles non mentionnes dans le Parts No. ne sont pas fournis.
Teile ohne Parts No. werden nicht geliefert.

Ref. No. 参照番号	Address 位置	New Parts 新	Parts No. 部品番号	Description 部品名／規格	Destination 仕向	Remarks 備考
R10			RK73FB2A333J	CHIP R 33K J 1/10W		
R11			RK73FB2A183J	CHIP R 18K J 1/10W		
W1 -6			R92-0670-05	CHIP R 0 OHM		
D1			DAN202(K)	CHIP DIODE		
D2			DAP202(K)	CHIP DIODE		
D3			DAN202(K)	CHIP DIODE		
Q1			2SC2712(Y)	CHIP TRANSISTOR		
VOX (X59-1080-00)						
C1			CK73FB1H102K	CHIP C 1000PF K		
C2			CK73FB1E223K	CHIP C 0.022UF K		
-			E23-0471-05	TERMINAL		
R1			RK73FB2A104J	CHIP R 100K J 1/10W		
R2 -5			RK73FB2A103J	CHIP R 10K J 1/10W		
R6 ,7			RK73FB2A105J	CHIP R 1.0M J 1/10W		
R8			RK73FB2A474J	CHIP R 470K J 1/10W		
R9			RK73FB2A105J	CHIP R 1.0M J 1/10W		
R10			RK73FB2A103J	CHIP R 10K J 1/10W		
W1 -3			R92-0670-05	CHIP R 0 OHM		
D1 ,2			DAP202(K)	CHIP DIODE		
IC1			NJM2904M	IC(DP AMP X2)		
IC2			TC4001BF	IC(NOR X6)		
Q1			2SC2712(Y)	CHIP TRANSISTOR		
FM MIC AMP. (X59-3000-02)						
C1			CC73FCH1H680J	CHIP C 68PF J		
C2			CK73FB1H561K	CHIP C 560PF K		
C3			CC73FCH1H390J	CHIP C 39PF J		
C4			CK73FB1H102K	CHIP C 1000PF K		
C5			CK73FB1E223K	CHIP C 0.022UF K		
-			E23-0471-05	TERMINAL		
JR1			R92-0670-05	CHIP R 0 OHM		
R1			RK73FB2A105J	CHIP R 1.0M J 1/10W		
R2			RK73FB2A823J	CHIP R 82K J 1/10W		
R3			RK73FB2A562J	CHIP R 5.6K J 1/10W		
R4			RK73FB2A472J	CHIP R 4.7K J 1/10W		
R5 -7			RK73FB2A224J	CHIP R 220K J 1/10W		
R8			RK73FB2A182J	CHIP R 1.8K J 1/10W		
R9			RK73FB2A104J	CHIP R 100K J 1/10W		
IC1			NJM4558M	IC(DP AMP X2)		
Q1			2SC2712(Y)	CHIP TRANSISTOR		
TRX (X59-3340-00)						
C1 -3			CK73EB1H473K	CHIP C 0.047UF K		
-			E23-0471-05	TERMINAL		
R1			RK73FB2A103J	CHIP R 10K J 1/10W		
R2			RK73FB2A471J	CHIP R 470 J 1/10W		
R3			RK73FB2A103J	CHIP R 10K J 1/10W		
R4			RK73FB2A471J	CHIP R 470 J 1/10W		
R5			RK73FB2A103J	CHIP R 10K J 1/10W		
R6			RK73FB2A471J	CHIP R 470 J 1/10W		
W1 ,2			R92-0670-05	CHIP R 0 OHM		

E: Scandinavia & Europe K: USA P: Canada
U: PX(Far East, Hawaii) T: England M: Other Areas
UE: AAFES(Europe) X: Australia

A : TS-140S (K,M,T,W)
B : TS-680S (K)

⚠ indicates safety critical components.

PARTS LIST

* New Parts
Parts without Parts No. are not supplied.
Les articles non mentionnes dans le Parts No. ne sont pas fournis.
Teile ohne Parts No. werden nicht geliefert.

Ref. No. 参照番号	Address 位置	New Parts 新	Parts No. 部品番号	Description 部品名／規格	Destination 仕向	Remarks 備考
D1 ,2			DAN202(K)	CHIP DIODE		
Q1 ,2		*	2SA1204(Y)	CHIP TRANSISTOR		
Q3		*	2SA1182(Y)	CHIP TRANSISTOR		
Q4 ,5			DTC114EK	DIGITAL TRANSISTOR		
NB2 (X59-3350-00)						
C1			CK73FB1H103K	CHIP C 0.010UF K		
C2			CK73FB1H102K	CHIP C 1000PF K		
C3			CK73EF1E474Z	CHIP C 0.47UF Z		
-			E23-0471-05	TERMINAL		
R1			RK73FB2A103J	CHIP R 10K J 1/10W		
R2			RK73FB2A563J	CHIP R 56K J 1/10W		
R3			RK73FB2A684J	CHIP R 680K J 1/10W		
R4			RK73FB2A103J	CHIP R 10K J 1/10W		
R5			RK73FB2A184J	CHIP R 180K J 1/10W		
W1 -3			R92-0670-05	CHIP R 0 OHM		
IC1			TC4011BF	IC(NAND X4)		
Q1 ,2			DTC114EK	DIGITAL TRANSISTOR		
DELAY TIME (X59-3360-00)						
C1			CK73FB1H103K	CHIP C 0.010UF K		
-			E23-0471-05	TERMINAL		
R1 -3			RK73FB2A103J	CHIP R 10K J 1/10W		
W1 -7			R92-0670-05	CHIP R 0 OHM		
D1			DAN202(K)	CHIP DIODE		
IC1		*	MB74LS122	IC		
Q1 -5			DTC114EK	DIGITAL TRANSISTOR		
Q6			DTA114EK	DIGITAL TRANSISTOR		
Q7			DTC114TK	DIGITAL TRANSISTOR		
FAN (X59-3370-00)						
C1			CK73FB1H103K	CHIP C 0.010UF K		
-			E23-0471-05	TERMINAL		
R1			RK73FB2A103J	CHIP R 10K J 1/10W		
R2			RK73FB2A223J	CHIP R 22K J 1/10W		
R3			RK73FB2A562J	CHIP R 5.6K J 1/10W		
R4			RK73FB2A122J	CHIP R 1.2K J 1/10W		
R5			RK73FB2A562J	CHIP R 5.6K J 1/10W		
R6			RK73FB2A332J	CHIP R 3.3K J 1/10W		
R7			RK73FB2A562J	CHIP R 5.6K J 1/10W		
R8			RK73FB2A223J	CHIP R 22K J 1/10W		
R9 ,10			RK73FB2A103J	CHIP R 10K J 1/10W		
W1 ,2			R92-0670-05	CHIP R 0 OHM		
IC1			NJM4558M	IC(OP AMP X2)		
Q1			2SC2712(Y)	CHIP TRANSISTOR		

FOR SERVICE MANUALS
CONTACT:
MAURITRON TECHNICAL SERVICES
www.mauritron.co.uk
TEL: 01844 - 351694
FAX: 01844 - 352554

E: Scandinavia & Europe K: USA P: Canada
U: PX(Far East, Hawaii) T: England M: Other Areas
UE: AAFES(Europe) X: Australia

A : TS-140S (K,M,T,W)
B : TS-680S (K)

⚠ indicates safety critical components.

DISASSEMBLY

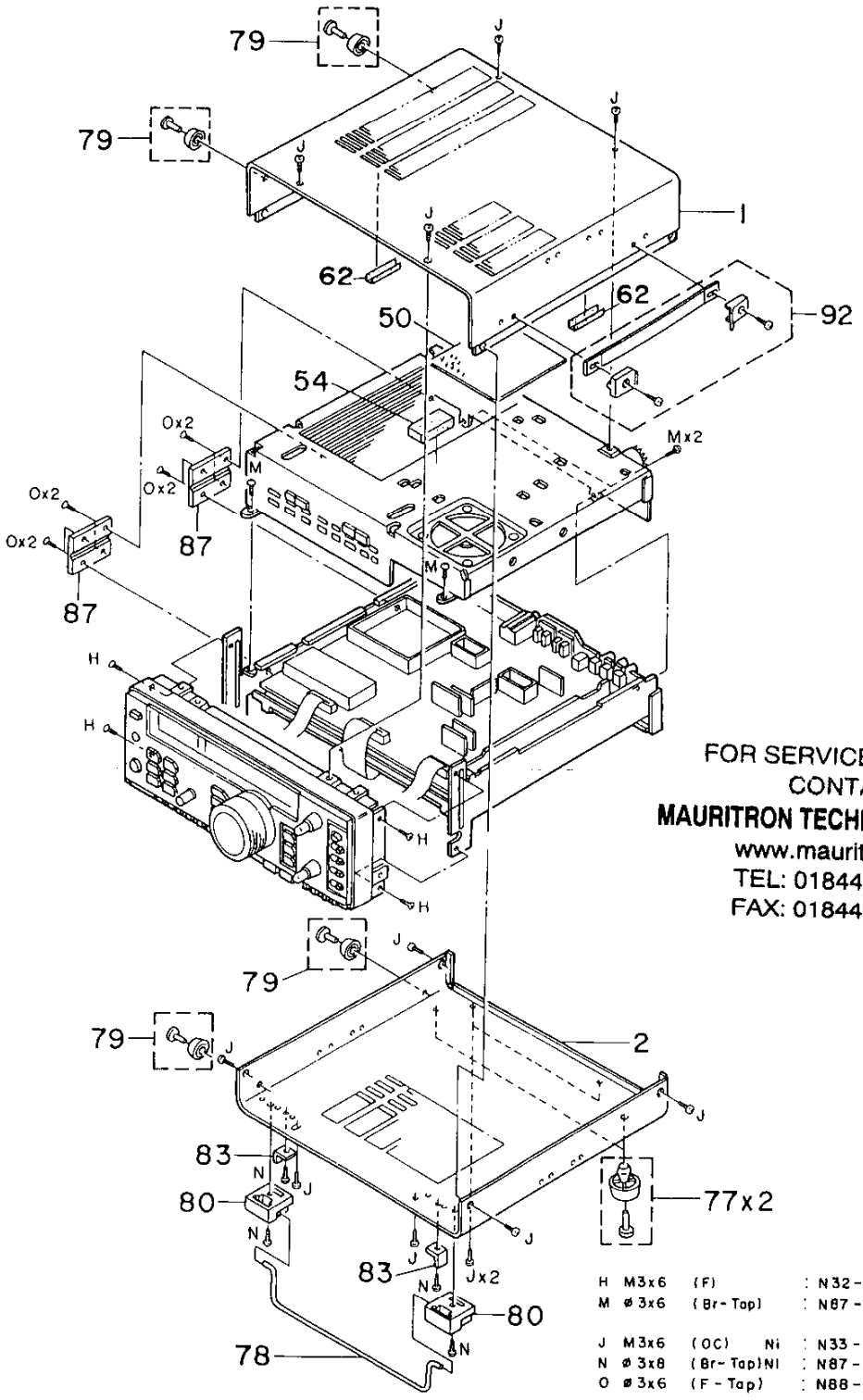

FOR SERVICE MANUALS
CONTACT:
MAURITRON TECHNICAL SERVICES
www.mauritron.co.uk
TEL: 01844 - 351694
FAX: 01844 - 352554

H	M3x6	(F)	: N32 - 3006 - 46
M	ø3x6	(Br - Tap)	: N87 - 3006 - 46
J	M3x6	(OC) Ni	: N33 - 3006 - 41
N	ø3x8	(Br - Tap) Ni	: N87 - 3008 - 41
O	ø3x6	(F - Tap)	: N88 - 3006 - 46

DISASSEMBLY

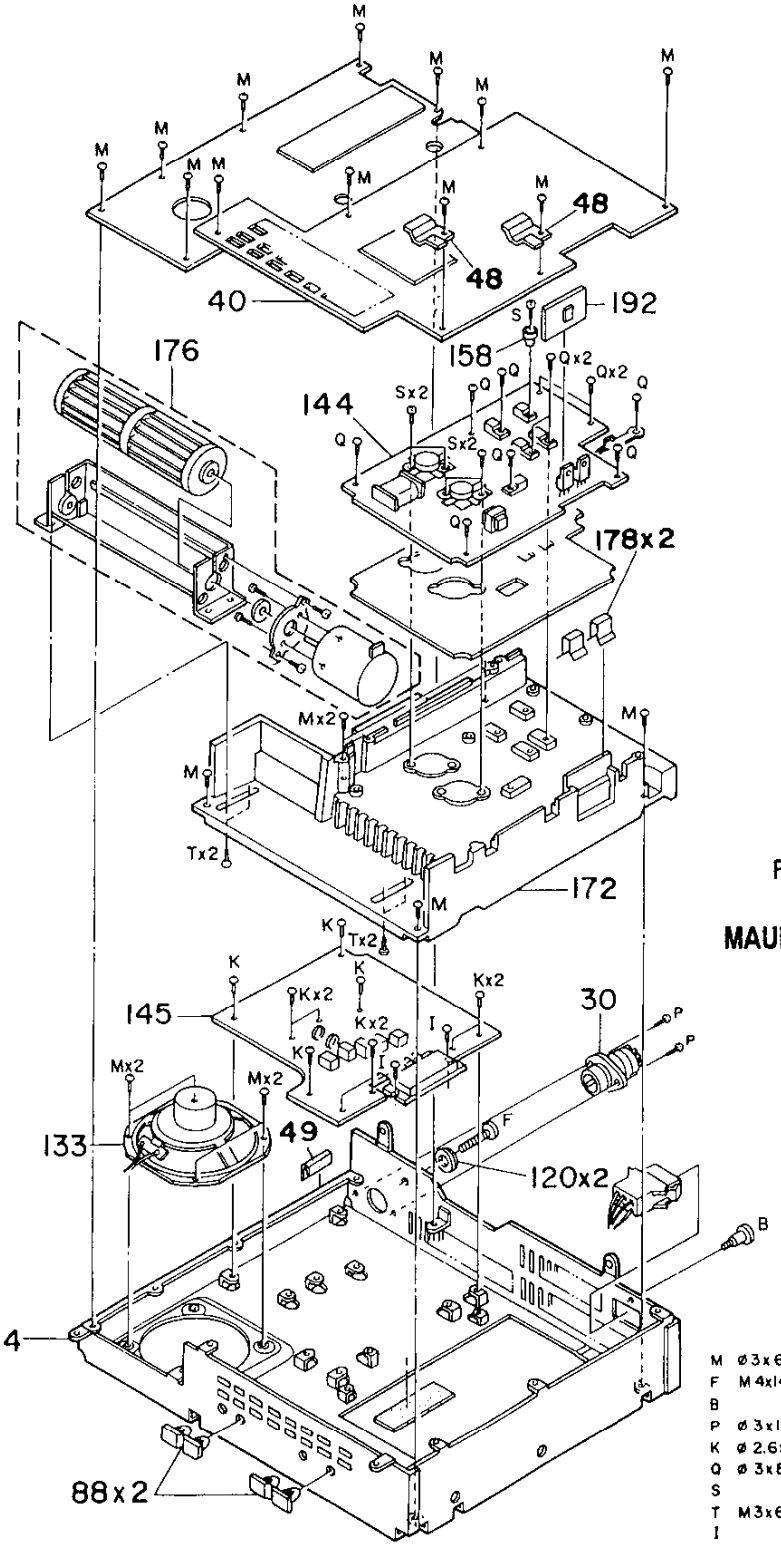

FOR SERVICE MANUALS
CONTACT:
MAURITRON TECHNICAL SERVICES
www.mauritron.co.uk
TEL: 01844 - 351694
FAX: 01844 - 352554

M	ø3x6	(Br-Top)	: N87-3006-46
F	M4x14	Ni	: N30-4014-41
B			: N09-0372-04
P	ø3x10	(Br-Top)Ni	: N87-3010-41
K	ø2.6x6	(Br-Top)	: N87-2606-46
Q	ø3x8	(Br-Top)	: N87-3008-46
S			: N09-0623-04
T	M3x6	(Bi)	: N35-3006-46
I			: N09-0623-04

DISASSEMBLY

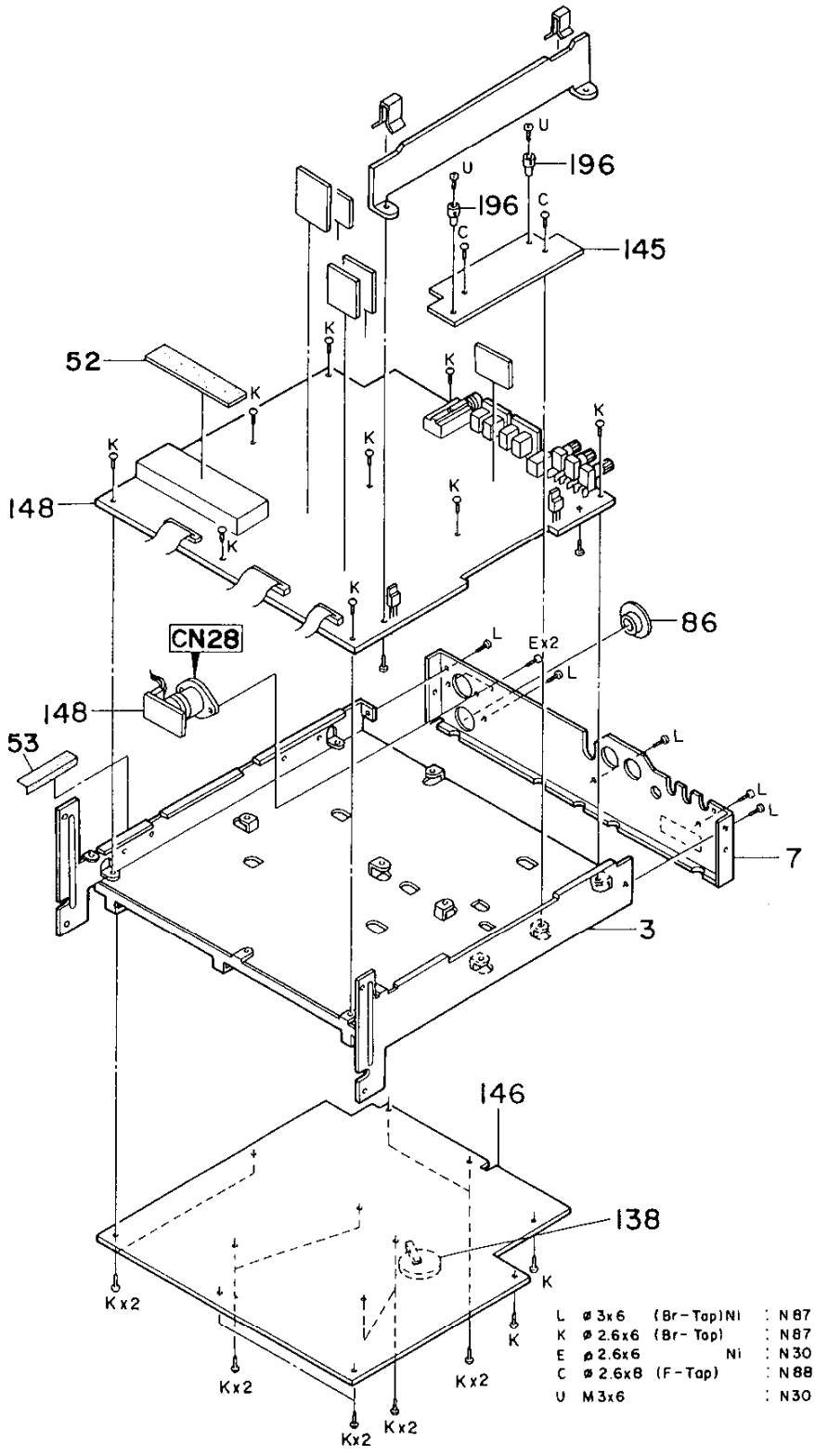

DISASSEMBLY

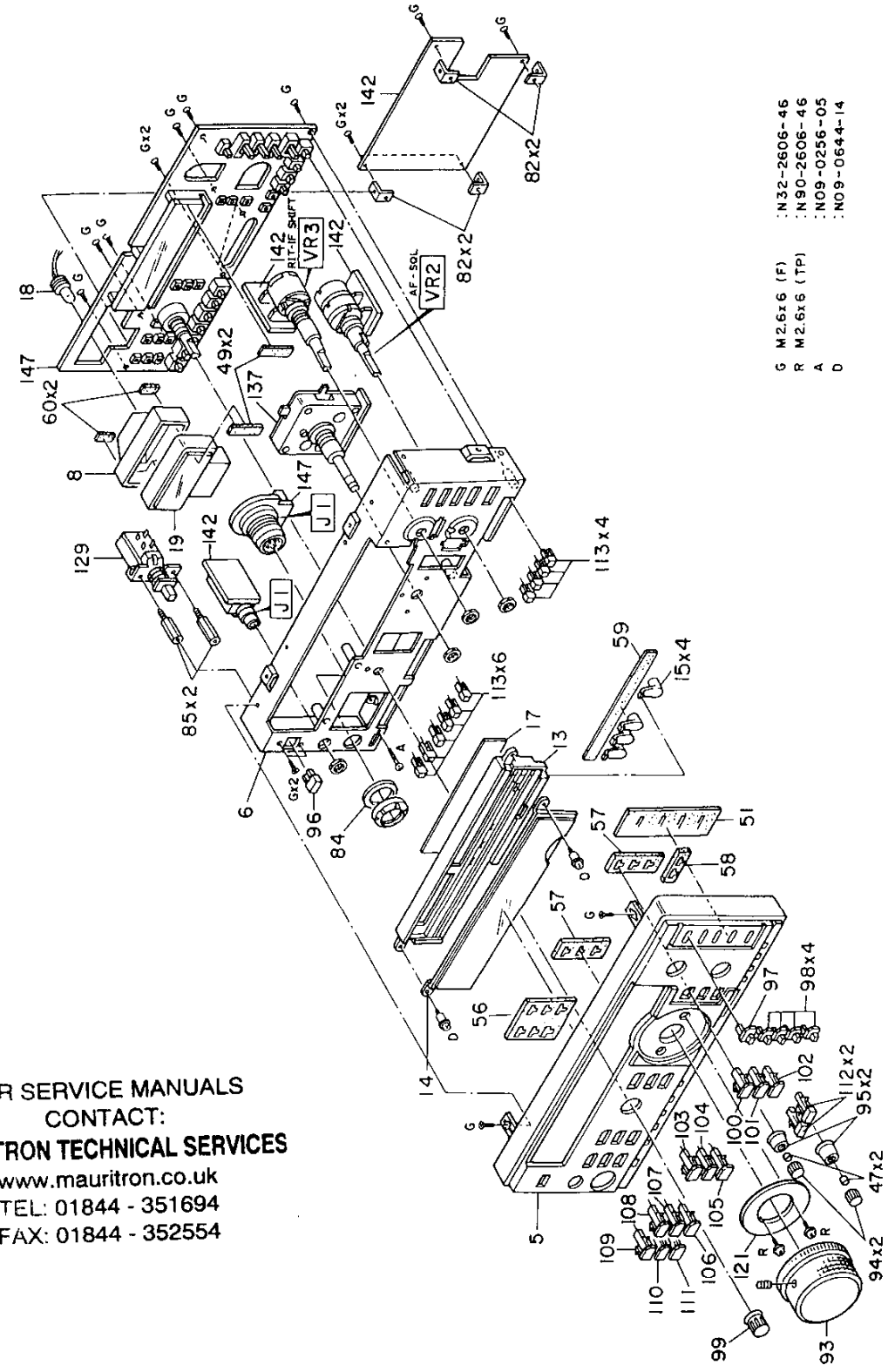

FOR SERVICE MANUALS
CONTACT:
MAURITRON TECHNICAL SERVICES
www.mauritron.co.uk
TEL: 01844 - 351694
FAX: 01844 - 352554

PACKING

J K

Accessory
Warranty card (B46-0410-20) : **K**
Instruction manual (B50-8199-20)
7P DIN plug (E07-0751-05)
DC power cord ass'y (E30-2065-05)
Connecting wire(CAL) (E31-2154-05)
13P plug (E07-1351-05)
Fuse(20A) (F05-2036-05)
Microphone (T91-0352-15) : **K, M**

Carton box (H01-8146-04) : **TS-140S**
Carton box (H01-8165-04) : **TS-680S**
Packing fixture(FRONT) (H10-2633-02)
Packing fixture(REAR) (H10-2634-02)
Cushion (H12-1315-04)
Cushion(FRONT) (H12-1405-04)
Protective cover (H20-1410-03)
Protective bag(DC CORD) (H25-0112-04)
Protective bag(MIC) (H25-0079-04) : **K, M**

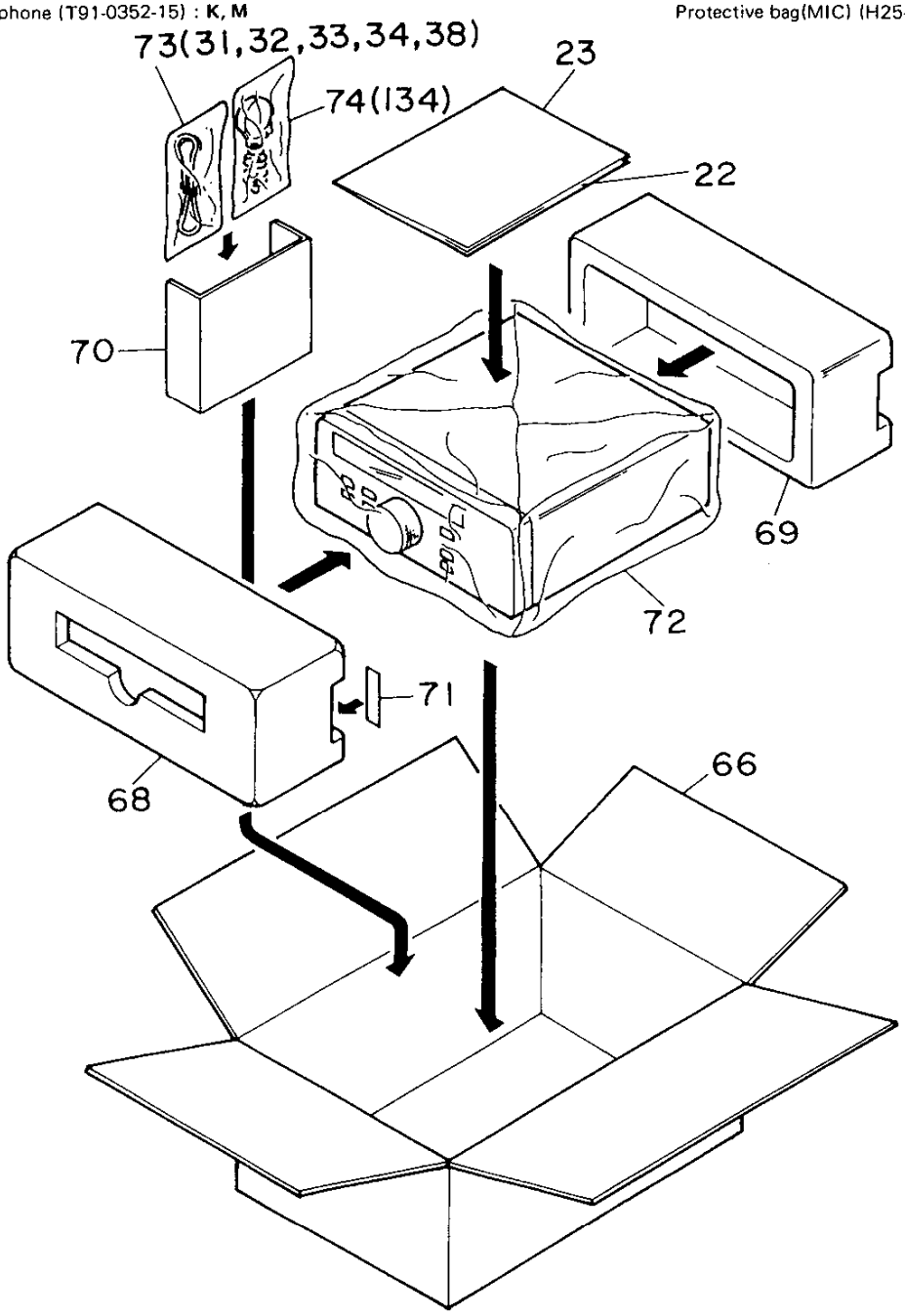

LEVEL DIAGRAM

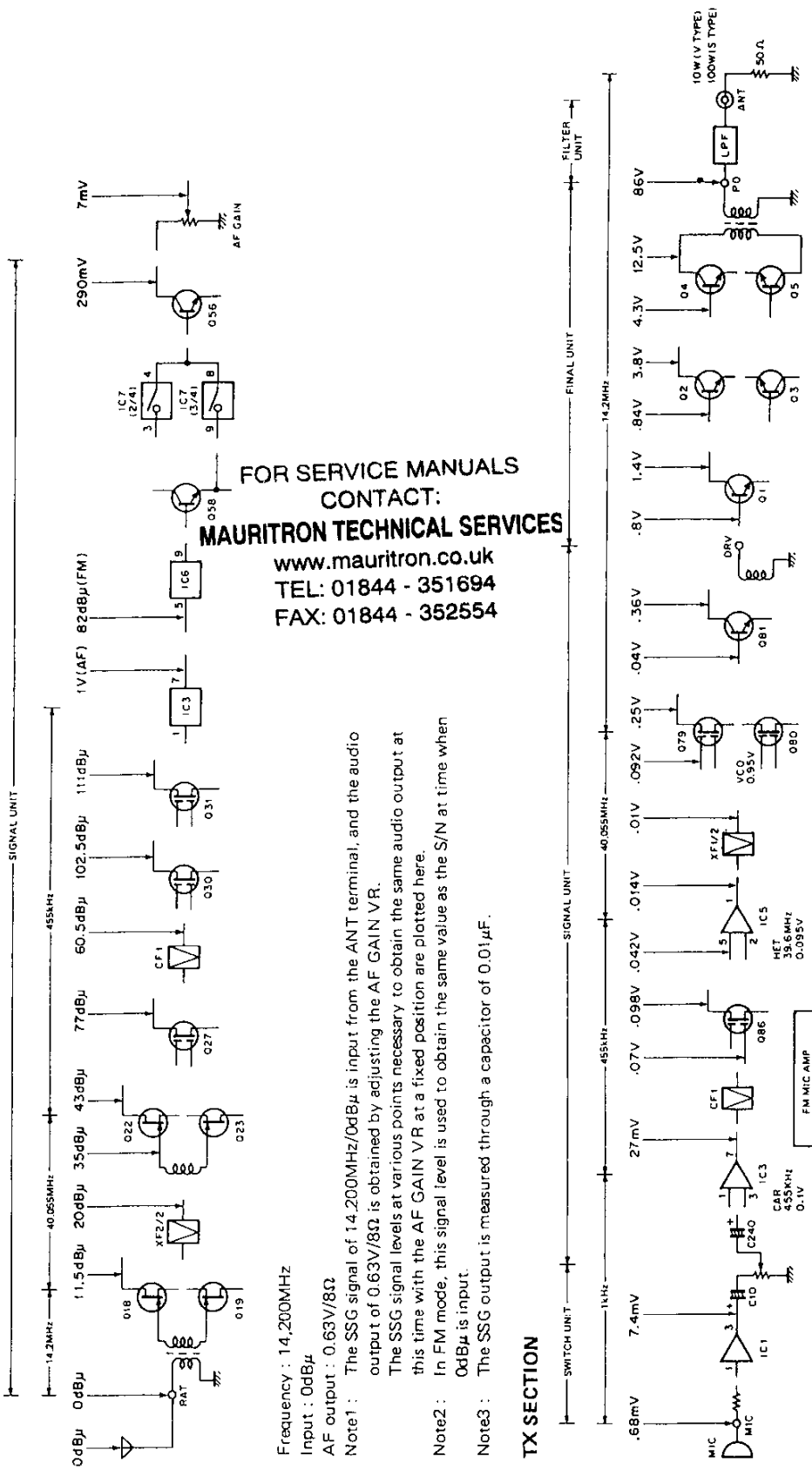

FOR SERVICE MANUALS
CONTACT:
MAURITRON TECHNICAL SERVICES
www.mauritron.co.uk
TEL: 01844 - 351694
FAX: 01844 - 352554

ADJUSTMENT

REQUIRED TEST EQUIPMENT

1. DC Voltmeter (DC V.M)
   1) Input resistance : More than 1MΩ
   2) Voltage range : 1.5 to 1000V AC/DC
   NOTE : A high-precision multimeter may be used. However, accurate readings can not be obtained for high-impedance circuits.
2. DC Ammeter
   1) Current range : 1.5A, 3A, 20A, High-precision ammeter may be used.
3. RF VTVM (RF V.M)
   1) Input impedance : 1MΩ and less than 3pF, min.
   2) Voltage range : 10mV to 300V
   3) Frequency range : 10kHz to 100MHz or greater
4. AF Voltmeter (AF V.M)
   1) Frequency range : 50Hz to 10kHz
   2) Input resistance : 1MΩ or greater
   3) Voltage range : 10mV to 30V
5. AF Generator (AG)
   1) Frequency range : 200Hz to 5kHz
   2) Output : 1mV or less to 1V, low distortion
6. AF Dummy Load
   1) Impedance : 8Ω
   2) Dissipation : 3W or greater
7. Oscilloscope (SCOPE)
   Vertical amplifier which has frequency characteristics higher than 100MHz.
   Requires high sensitivity, and external synchronization capability.
3. Tracking generator
   1) Center frequency : 50kHz to 90MHz
   2) Frequency deviation : Maximum±35MHz
   3) Output voltage : 0.1V or greater
   4) Sweep rate : At least 0.5sec/cm
). Standard Signal Generator (SSG)
   1) Frequency range : 50kHz to 500MHz
   2) Output : −20dB/0.1μV to 120dB/1V
   3) Output impedance : 50Ω
   4) AM and FM modulation can be possible.
   NOTE : Generator must ve frequency stable.
0. Frequency Counter (FREQ.C)
   1) Minimum input voltage : 50mV
   2) Frequency range : 500MHz or greater
   3) Output impedance : 50Ω
1. Noise Generator
   Must generate ignition noise containing harmonics beyond 30MHz.
2. RF Dummy Load
   1) Impedance : 150Ω
   2) Dissipation : 150W or greater
3. Power Meter
   1) Impedance : 50Ω
   2) Dissipation : 150W cintinuous or greater
   3) Frequency limits : 60MHz or greater
14. Spectrum Analyzer (SPE-ANA)
   1) Frequency range : 100kHz to 500MHz or greater
   2) Bandwidth : 1kHz to 3MHz
15. Detector
   1) For adjustment of PLL/VCO BPF

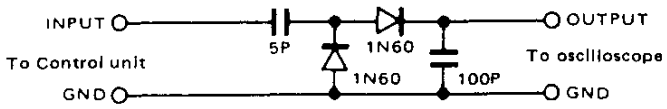

16. Directional Coupler
17. Power
   PS-430, PS-50 (S Tipe)
   PS-21 (V Tipe)
18. Microphone
   MC-60S8 or MC-42S

PREPARATION

Unless otherwise specified, set the controls as follows :

POWER	ON	PROC	OFF
BAND	14	ALC/PWR	PWR
AF	MIN	ATT	OFF
SQL	MIN	AGC	SLOW
IF SHIFT	CENTER	VOX (TS-140S)	OFF
CW	OFF	RF AMP (TS-680S)	OFF
PWR	MIN	1MHz	OFF
MIC	MIN	RIT	OFF
RF GAIN	MAX	NB1	OFF
NB LEVEL	MIN	NB2	OFF
F. LOCK	OFF	VFO A/B	A
SEND/REC	REC	SPLIT	OFF

FOR SERVICE MANUALS
CONTACT:
MAURITRON TECHNICAL SERVICES
www.mauritron.co.uk
TEL: 01844 - 351694
FAX: 01844 - 352554

ADJUSTMENT

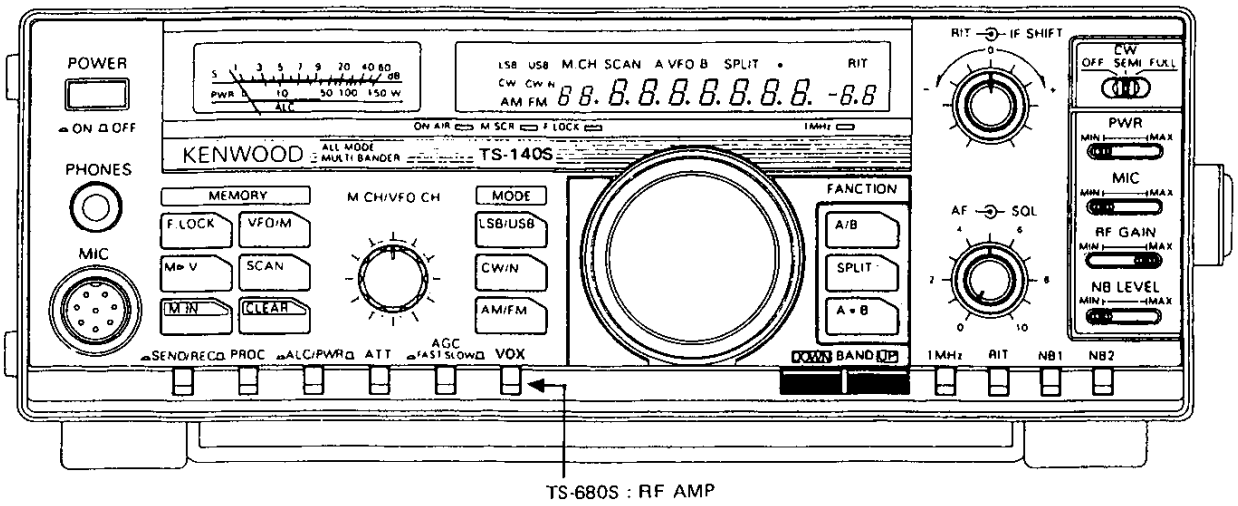

TS-680S : RF AMP

RESET

Item	Condition	Measurement			Adjustment			Specifications/Remarks
		Test-equipment	Unit	Terminal	Unit	Parts	Method	
1. Reset	1) Set the power SW ON, while depressing the A=B key.							A.VFO 14.000.0 MODE : USB

VOLTAGE CHECK

Item	Condition	Measurement			Adjustment			Specifications/Remarks
		Test-equipment	Unit	Terminal	Unit	Parts	Method	
1. Voltage	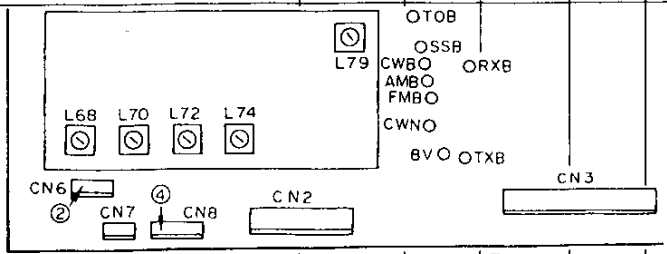							
	1)	DC V.M	Signal	⑧-4			13.8V	13.1 ~ 14.3V
				8V(Silk)			7.7V	7.2 ~ 8.0V
	2) SEND/REC SW : SEND			TXB(Silk)			7.5V	7.0 ~ 8.0V
	3) SEND/REC SW : REC			RXB(Silk)			7.5V	7.0 ~ 8.0V
	4) MODE : FM			FMB(Silk)				6.5 ~ 8.0V
	5) MODE : AM			AMB(Silk)				6.5 ~ 8.0V
	6) MODE : CWN			CWN(Silk)				6.5 ~ 8.0V
	7) MODE : CW			CWB(Silk)				6.5 ~ 8.0V
	8) MODE : USB			SSB(Silk)				6.5 ~ 8.0V
	9) 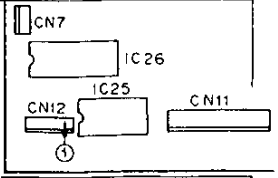		Ctrl	⑫-1			5V	4.5 ~ 5.5V
2. RFG voltage	1) RF GAIN VR : MAX		Signal	RXB (Silk)	Signal	VR22	3.1V	3.05 ~ 3.15V

ADJUSTMENT

PLL ADJUSTMENT

Item	Condition	Measurement			Adjustment			Specifications/Remarks
		Test-equipment	Unit	Terminal	Unit	Parts	Method	
1. Reference frequency	1)	f. counter	Ctrl	TP5 (R77)	Ctrl	TC1	36.000000MHz	±10Hz
2. VCO-4	1)	DC V.M		TP8 (L53)		L54	5.0V	4.8 ~ 5.2V
3. VCO-3	1) FREQ. : 14.000.00 MODE : AM			TP1 (L2)		L3	2.4V	2.3 ~ 2.5V
	2) FREQ. : 14.000.00 MODE : USB IF SHIFT VR : Center Control unit VR4 : CW MAX	f. counter		①-1		VR2	455.700kHz	±5Hz
	3) IF SHIFT VR : CW MAX						Check	457.250kHz or more.
	4) IF SHIFT VR : CCW MAX							454.125kHz or less.
	5) IF SHIFT VR : Center Control unit VR4 : Center							
4. VCO-2	1) FREQ. : 13.999.90 MODE : AM	DC V.M		TP2 (L11)		L12	1.2V	1.1 ~ 1.3V
	2) FREQ. : 14.000.00 MODE : AM						Check	3.1 ~ 3.7V
5. VCO-2 BPF	1) FREQ. : 14.025.00 MODE : AM	Oscillo-scope		TP3 (R51)		L17~ L19	Repeat 2 ~ 3 times. Level MAX.	1.4V/p-p or more. (Ref. level : 1.75V/p-p)
				TP4 (W2)		L28, L29		0.3V/p-p or more. (Ref. level : 0.4V/p-p)
				TP6 (R100)		L30~ L32		120mV/p-p or more. (Ref. level : 150mV/p-p)
	2) FREQ. : 10.025.00 MODE : AM					L32, L42~ L44		80mV/p-p or more. (Ref. level : 100mV/p-p)
	3) FREQ. : 24.525.00 MODE : AM					L39~ L41		
6. VCO-1	1) FREQ. : 59.999.90 MODE : AM TS-680S only.	DC V.M	Signal	⑥-2	Signal	L74	2.0V	1.9 ~ 2.1V
	2) FREQ. : 45.000.00 MODE : AM TS-680S only.						Check	5.0 ~ 6.0V
	3) FREQ. : 34.999.90 MODE : AM					L72	6.0V	5.9 ~ 6.1V
	4) FREQ. : 21.500.00 MODE : AM						Check	2.0 ~ 3.0V
	5) FREQ. : 21.499.90 MODE : AM					L70	2.0V	1.9 ~ 2.1V
	6) FREQ. : 10.500.00 MODE : AM						Check	5.0 ~ 6.0V
	7) FREQ. : 10.499.90 MODE : AM					L68	2.0V	1.9 ~ 2.1V
	8) FREQ. : 50.00						Check	5.5 ~ 6.5V

FOR SERVICE MANUALS
CONTACT:
MAURITRON TECHNICAL SERVICES
www.mauritron.co.uk
TEL: 01844 - 351694
FAX: 01844 - 352554

ADJUSTMENT

RX ADJUSTMENT

Item	Condition	Measurement			Adjustment			Specifications/Remarks
		Test-equipment	Unit	Terminal	Unit	Parts	Method	
1. RX AMP.	1) FREQ. : 14.175.00 MODE : USB SSG output : Optional output from 10dBμ to −6dBμ	SSG AF V.M Oscilloscope 8Ω dummy load		EXT.SP	Signal	L52~ L55, L57,59 L60,64 L65,89	Adjust from L52 to L89.	MAX. AF output.
	2) SSG output : −6dBμ					L52~ L55	Repear 2 ~ 3 times.	MAX. AF output.
2. FM AMP.	1) FREQ. : 28.800.00 MODE : FM SSG output : 30dBμ (MOD : 1kHz, DEV : ±3kHz)					L86	MAX. AF output.	No destortion in AF waveform.
3. 1st MIX balance	1) FREQ. : 100.00 MODE : USB SSG output : OFF					VR1	MIN. AF noise output.	
4. 2nd MIX balance	1) FREQ. : 14.175.00 MODE : USB SSG output : OFF					VR2	MAX. AF noise output.	
5−1. IF trap	1) FREQ. : 29MHz MODE : USB SSG output : 60dBμ~80dBμ SSG FREQ. : 40.055MHz					L1,46	1) MIN. AF output at 60dBμ of SSG output. 2) Readjust to MIN. AF output at 80dBμ of SSG output.	50dB or more.
5−2. IF trap TS-140S W type only	1) FREQ. : 11.800.00 MODE : USB SSG output : 0dB		TC1 →			TC2	MIN. AF output.	
	2) FREQ. : 15.200.00		TC2 →			TC1	MIN. AF output. Repeat 2 ~ 3 times.	
6. RF AMP. TS-680S only.	1) FREQ. : 28.800.00 MODE : USB SSG output : −10dBμ RF AMP SW : ON					L37	MAX. AF output.	
	2) FREQ. : 50.500.00					L42		
	3) RF AMP SW : OFF							
7. S-meter	1) FREQ. : 14.175.00 MODE : USB AGC SW : FAST							
	• φ point SSG output : OFF					VR26	Set to starting point. (Meter zero)	
	• S1 SSG output : 6dBμ					VR3	S-meter "1".	
	• S9 SSG output : 32dBμ					VR10	S-meter "9".	
	• S1 check SSG output : 6dBμ						Check	6dBμ ± 3dBμ
	• VHF S-meter (TS-680S only) FREQ. : 50.500.00 MODE : USB SSG output : 32dBμ					VR11	S-meter "9".	
	• FM meter FREQ. : 28.800.00 MODE : FM SSG output : 30dBμ (MOD : OFF) RF AMP SW : OFF (TS-680S only)					VR12	S-meter "9 + 20".	

FOR SERVICE MANUALS
CONTACT:
MAURITRON TECHNICAL SERVICES
www.mauritron.co.uk
TEL: 01844 - 351694
FAX: 01844 - 352554

ADJUSTMENT

Item	Condition	Measurement			Adjustment			Specifications/Remarks
		Test-equipment	Unit	Terminal	Unit	Parts	Method	
8. RIT	1) Set the Power SW ON, while depressing the CLEAR key.			Display			Check	Display of 10Hz is displayed.
	2) FREQ. : 14.000.00 MODE : USB RIT VR : Center RIT SW : ON				Ctrl	VR1	Set display to MAIN 14.000.00 RIT 0.0	
	3) RIT VR : CW MAX						Check	Display MAIN : 14.001.27 or more RIT : 1.2 or more.
	4) RIT VR : CCW MAX						Check	Dispaly MAIN : 13.998.72 or less. RIT : −1.2 or less.
	5) RIT VR : Center RIT SW : OFF							
9. NB	1) FREQ. : 14.200.00 MODE : USB SSG output : 30dBμ NB1 SW : ON	SSG DC V.M	Signal	L83 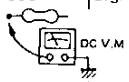	Signal	L84,85	MIN. voltage.	
	2) Connect the noise generator to the ANT terminal.	Noise generator		S-meter			Check	The same effect as NB1 is obtained.
	3) NB1 SW : OFF NB2 SW : ON							
	4) Disconnect the noise generator from the ANT terminal. NB2 SW : OFF							

TX ADJUSTMENT

Item	Condition	Measurement			Adjustment			Specifications/Remarks
		Test-equipment	Unit	Terminal	Unit	Parts	Method	
1. TX AMP	1) FREQ. : 50.200.00 (TS-680S) FREQ. : 21.200.00 (TS-140S) MODE : CW Signal unit VR19 : Center CW SW : FULL SEND/REC SW : SEND	Spectrum analyzer	Signal	DRV	Signal	L89,95 L113 VR20	Adjust CAR VR to level no to be saturated, and MAX. output.	MAX. output. (Ref. level : 13dBm or more)
	2) SEND/REC SW : REC							
2. 455kHz spurious	1) FREQ. : 50.200.00 (TS-680S) FREQ. : 21.200.00 (TS-140S) SEND/REC SW : SEND					L53	MIN. Spurious level of 455kHz.	
	2) After adjustment, reconnected DRV. SEND/REC SW : REC							
3. Base current	1) FREQ. : 14.200.00 MODE : USB MIC VR : MIN PWR VR : MIN Final unit VR1, 2 : CCW MAX SEND/REC SW : SEND	Ammeter		DC cord	Final	VR1	1) Record current before adjusting VR1 and VR2. 2) Adjust VR1 for an increase for +250mA.	250mA ± 50mA. (Total current : 1.7 ~ 1.8A)
						VR2	Adjust VR2 so that the current is increase of above item 2) 250mA.	500mA ± 50mA. (Total current : 1.95 ~ 2.05A)
	2) SEND/REC SW : REC							

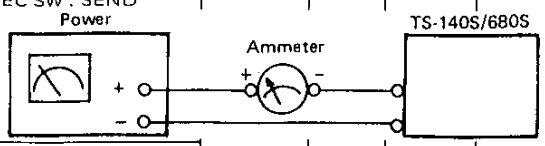

ADJUSTMENT

Item	Condition	Measurement			Adjustment			Specifications/Remarks
		Test-equipment	Unit	Terminal	Unit	Parts	Method	
4. Power	• CW 1) FREQ. : 14.200.00 MODE : CW PWR VR : MAX (S2 HI / LO) Signal unit S2 : HI SEND/REC SW : SEND	Power meter	Rear	ANT	Signal	VR17	95W	±5W
	2) SEND/REC SW : REC							
	• FM 3) FREQ. : 29.700.00 MODE : FM Filter unit VR1 : Center PWR VR : MAX Signal unit S2 : HI SEND/REC SW : SEND					VR14	50W	
	4) SEND/REC SW : REC							
	• SSB 5) FREQ. : 14.200.00 MODE : USB PWR VR : MAX MIC VR : Center Display unit VR5 : CCW MAX MIC input : 1kHz, 5mV SEND/REC SW : SEND					VR13	100W	±5W
	6) SEND/REC SW : REC							
	• 50MHz (TS-680S only) 7) FREQ. : 51.200.00 MODE : CW PWR VR : Center Signal unit VR15 : CW MAX SEND/REC SW : SEND				Filter	TC1	Adjust PWR VR to set output about 10W. MAX. output at TC1.	
	8) PWR VR : MAX				Signal	VR15	11W	±0.5W
	9) SEND/REC SW : REC							
	• MIN. POWER 10) FREQ. : 51.200.00 (TS-680S) FREQ. : 29.700.00 (TS-140S) MODE : FM PWR VR : MIN SEND/REC SW : SEND					VR18	1W (TS-680S) 5W (TS-140S)	
	11) SEND/REC SW : REC PWR VR : MAX							
5. NULL	1) FREQ. : 3.700.00 MODE : CW SEND/REC SW : SEND	Power meter DC V.M	Signal	VSR ((13) -2)	Filter	TC2	MIN	
	2) SEND/REC SW : REC							
6. Protection	1) FREQ. : 14.200.00 MODE : CW SEND/REC SW : SEND	Power meter 150Ω dummy load	Rear	ANT	Signal	VR16	30W	
	2) SEND/REC SW : REC							

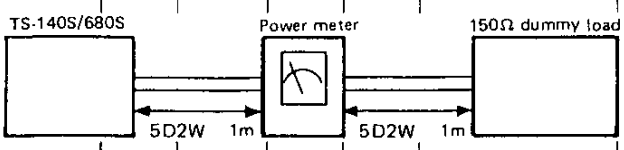

FOR SERVICE MANUALS
CONTACT:
MAURITRON TECHNICAL SERVICES
www.mauritron.co.uk
TEL: 01844 - 351694
FAX: 01844 - 352554

ADJUSTMENT

Item	Condition	Measurement			Adjustment			Specifications/Remarks
		Test-equipment	Unit	Terminal	Unit	Parts	Method	
7. Power meter	1) FREQ. : 14.200.00 MODE : CW ALC/PWR SW : PWR SEND/REC SW : SEND	Power meter	Rear	ANT	Signal	VR25	Adjust to 90W by CAR VR.	RF meter : 90W
	2) SEND/REC SW : REC							
8. ALC meter	1) FREQ. : 14.200.00 MODE : USB PWR VR : MAX MIC VR : MAX ALC/PWR SW : ALC Filter unit VR5 : Center	Power meter AG AF V.M		ALC meter	Signal			
	• ϕ point 2) SEND/REC SW : SEND					VR8	Adjust to the "0" of ALC meter reading.	
	3) SEND/REC SW : REC							
	• Start point 4) MIC input : 1kHz, 1.5mV SEND/REC SW : SEND						Adjust to the "0" of ALC meter reading by MIC VR.	
	5) SEND/REC SW : REC							
	• MAX 6) MIC input : 1kHz, 3mV SEND/REC SW : SEND					VR9	Adjust ALC meter MAX. within ALC zone.	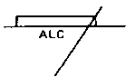
	7) ALC/PWR SW : PWR SEND/REC SW : REC							
9–1. Spurious TS-680S only.	• 50MHz 1) FREQ. : 50.200.00 MODE : CW PWR VR : MAX SEND/REC SW : SEND	Power meter Spectrum analyzer	Rear	ANT	Signal	VR19	Adjust as shown at right. (MIN. spurious of A and B.)	(60dB or less) 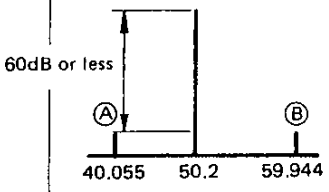
	2) SEND/REC SW : REC							
	• 21MHz 3) FREQ. : 21.200.00 SEND/REC SW : SEND					L97	Adjust as shown at right. (MIN. spurious of C.)	(45dB or less) 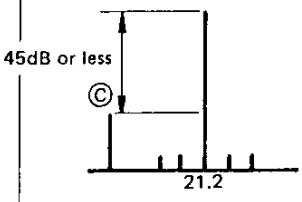
	2) SEND/REC SW : REC							
9–2. Spurious TS-140S only.	1) FREQ. : 21.200.00 MODE : CW PWR VR : MAX SEND/REC SW : SEND					VR19 L97	1) Adjust L97 to MIN. spurious of A. 2) Adjust VR19 to MIN. spurious of B.	(45dB or less) 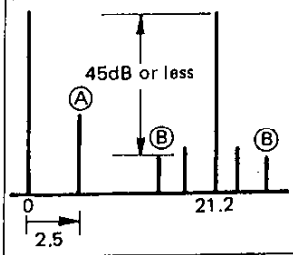
	2) SEND/REC SW : REC							

ADJUSTMENT

Item	Condition	Measurement			Adjustment			Specifications/Remarks
		Test-equipment	Unit	Terminal	Unit	Parts	Method	
10. CAR suppression	1) FREQ. : 14.200.00 MODE : USB or LSB MIC VR : MIN SEND/REC SW : SEND	Power meter Oscillo-scope or Spectrum analyzer	Rear	ANT	Signal	VR4 VR5	MIN. Adjust for no difference between USB and LSB.	−40dB or less.
	2) SEND/REC SW : REC							
11. TX frequency response	1) FREQ. : 14.200.00 MODE : USB or LSB AG output : 2 tone, 5mV 300Hz, 2600Hz SEND/REC SW : SEND MIC VR : ALC meter "0"	Power meter Oscillo-scope or Spectrum analyzer AG			Ctrl	VR3 (LSB) VR4 (USB)	Adjust as shown at right.	OK NG NG
	2) SEND/REC SW : REC							
12. Processor	1) FREQ. : 14.200.00 MODE : USB PROC SW : ON ALC/PWR SW : ALC AG output : 1kHz, 10mV SEND/REC SW : SEND	Power meter AG AF V.M					Adjust for ALC zone MAX. with MIC GAIN VR.	
	2) AG output : 20dB down						Check	The meter deflection is withir the ALC zone.
	3) SEND/REC SW : REC							
13. FM DEV	1) FREQ. : 28.700.00 MODE : FM MIC input : 1kHz, 30mV SEND/REC SW : SEND	Power meter AG AF V.M			Signal	VR24	4.6kHz	±0.1kHz
	2) MIC input : 1kHz, 3mV	Linear detector				VR6	3kHz	±0.1kHz
	3) SEND/REC SW : REC							
14. Side tone monitor level	1) FREQ. : 14.200.00 MODE : CW AF VR : Center Signal unit VR7 : CW MAX CW SW : SEMI Connect the KEY to the KEY jack.	Power meter AF V.M Oscillo-scope 8Ω dummy load		EXT.SP		VR21	0.25V/8Ω	±0.05V
	2) Disconnect the KEY from the KEY jack. CW SW : OFF							
15. Beep sound	1) Depress the LSB/USB key continuously.					VR23	Check	200 ~ 400mV.

FOR SERVICE MANUALS
CONTACT:
MAURITRON TECHNICAL SERVICES
www.mauritron.co.uk
TEL: 01844 - 351694
FAX: 01844 - 352554

ADJUSTMENT

ADJUSTMENT POINT
(Bottom view)

• CONTROL UNIT

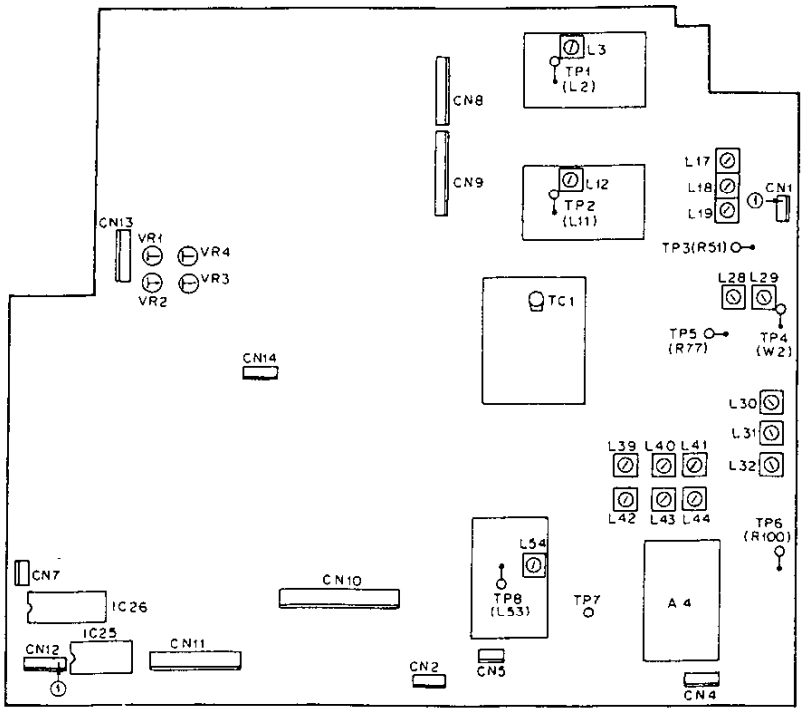

(Top view)

• FINAL UNIT

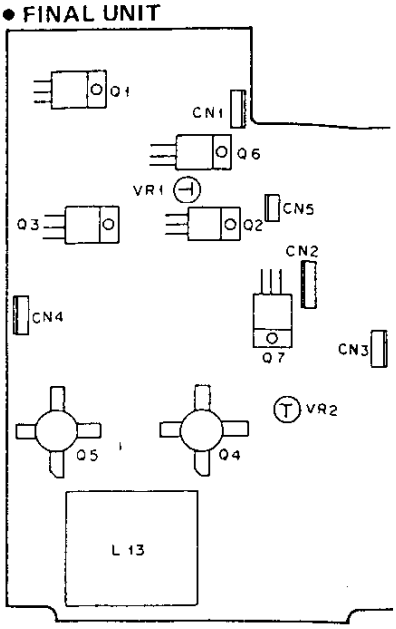

• DISPLAY UNIT

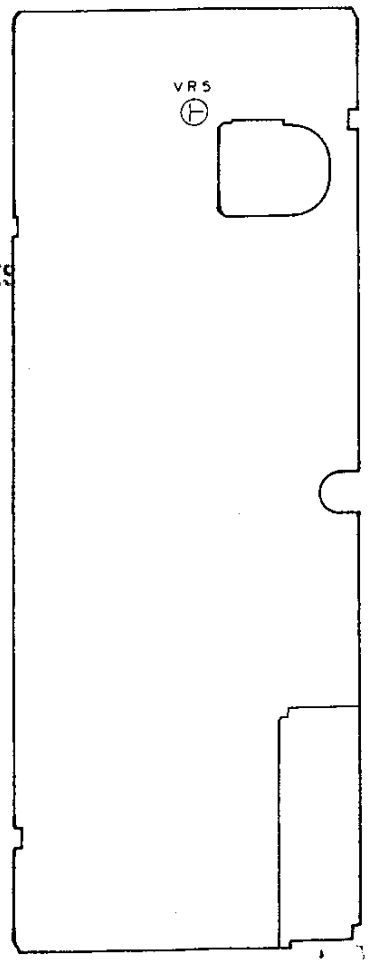

• FILTER UNIT

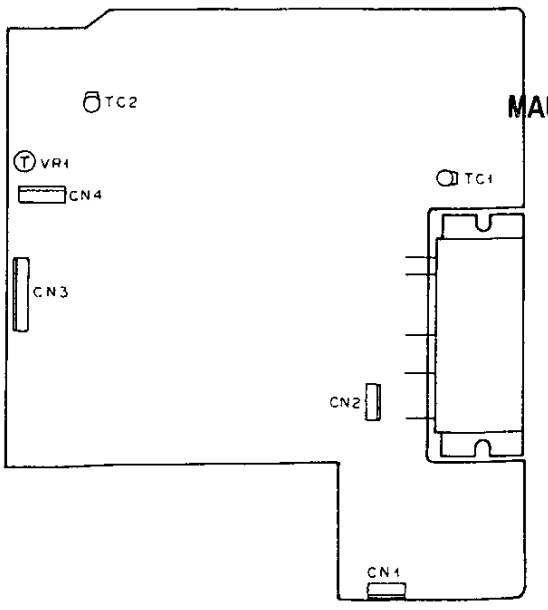

FOR SERVICE MANUALS
CONTACT:
MAURITRON TECHNICAL SERVICES
www.mauritron.co.uk
TEL: 01844 - 351694
FAX: 01844 - 352554

DJUSTMENT

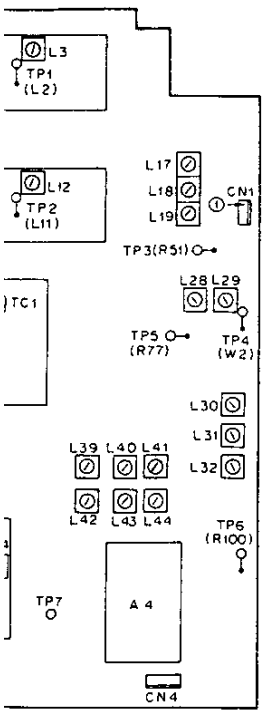

(Top view)

● FINAL UNIT

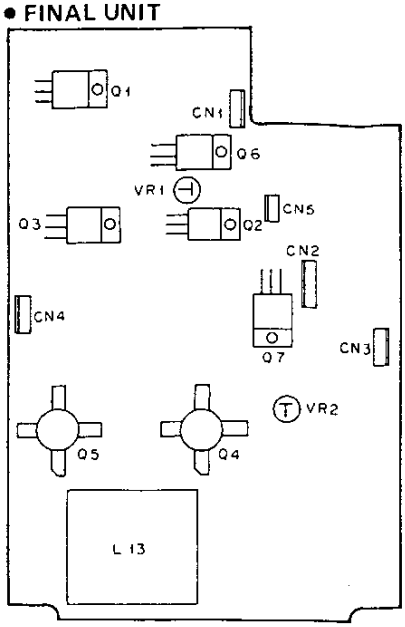

● DISPLAY UNIT

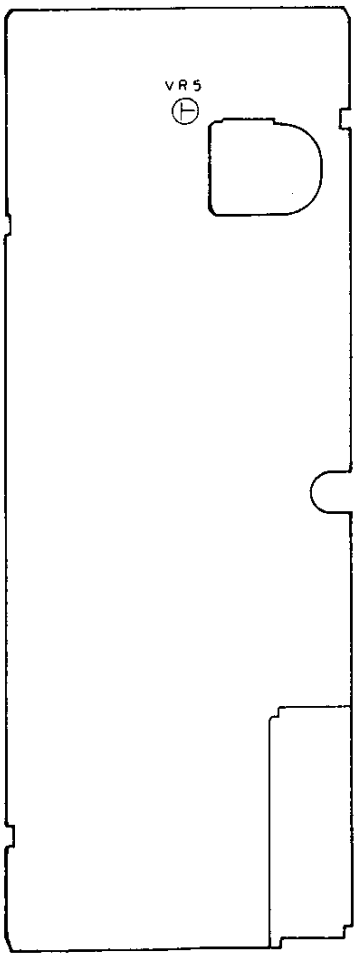

● SIGNAL UNIT
(TS-140S)

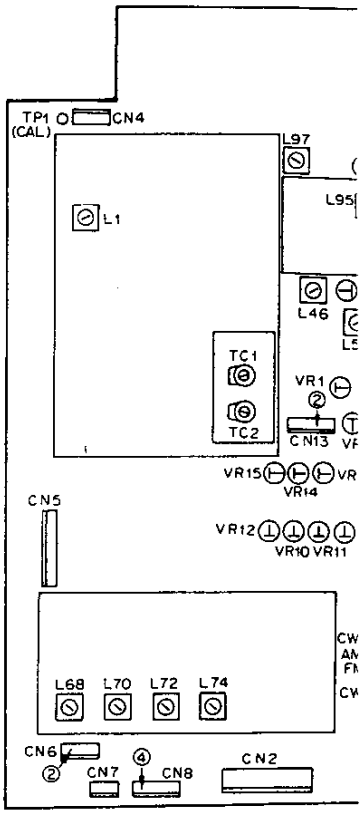

(TS-680S)

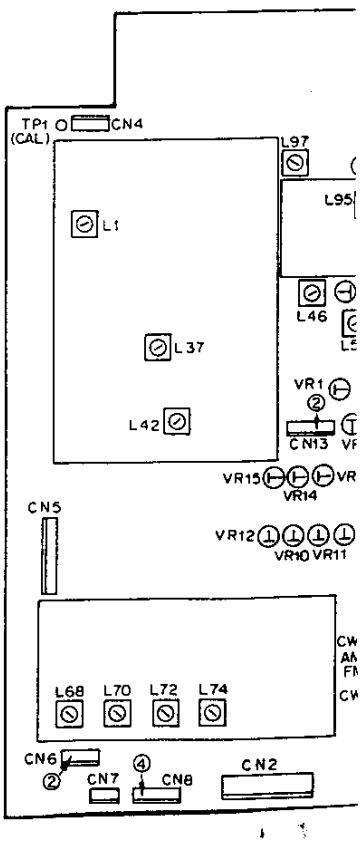

FOR SERVICE MANUALS
CONTACT:
MAURITRON TECHNICAL SERVICES
www.mauritron.co.uk
TEL: 01844 - 351694
FAX: 01844 - 352554

• SIGNAL UNIT
(TS-140S)

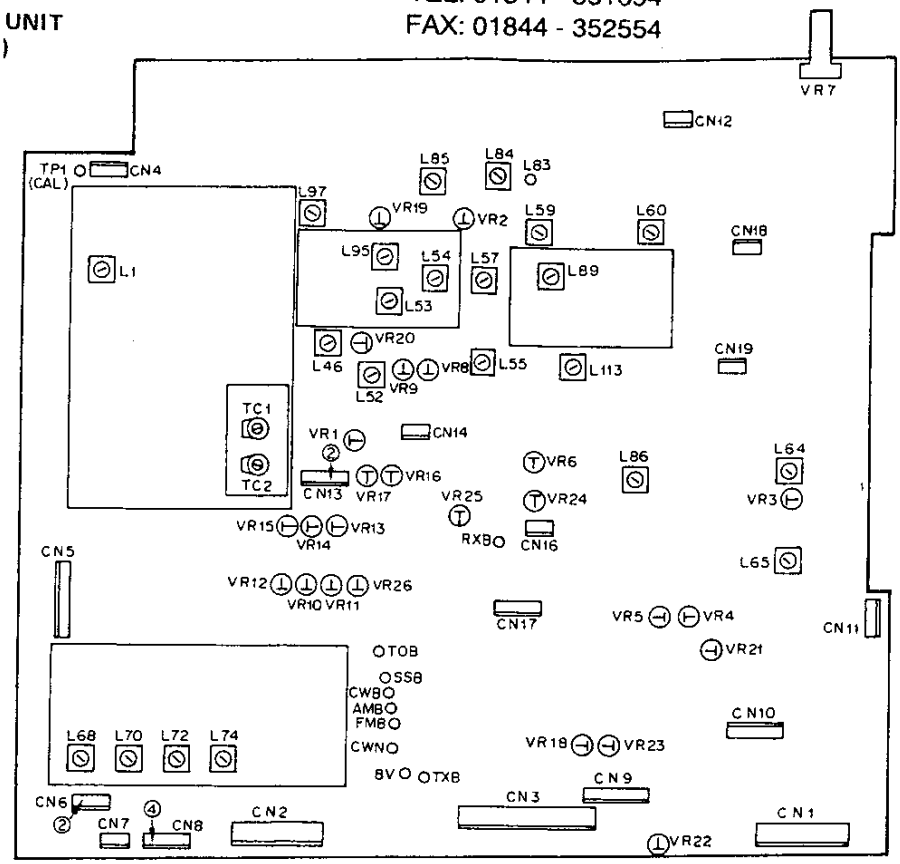

(TS-680S)

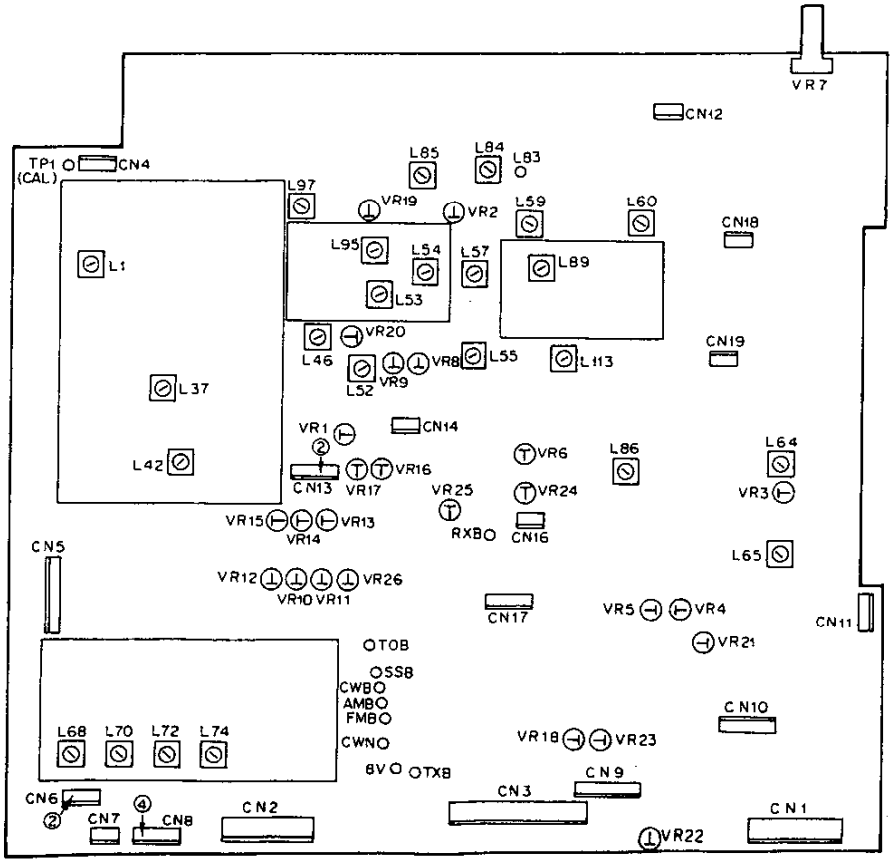

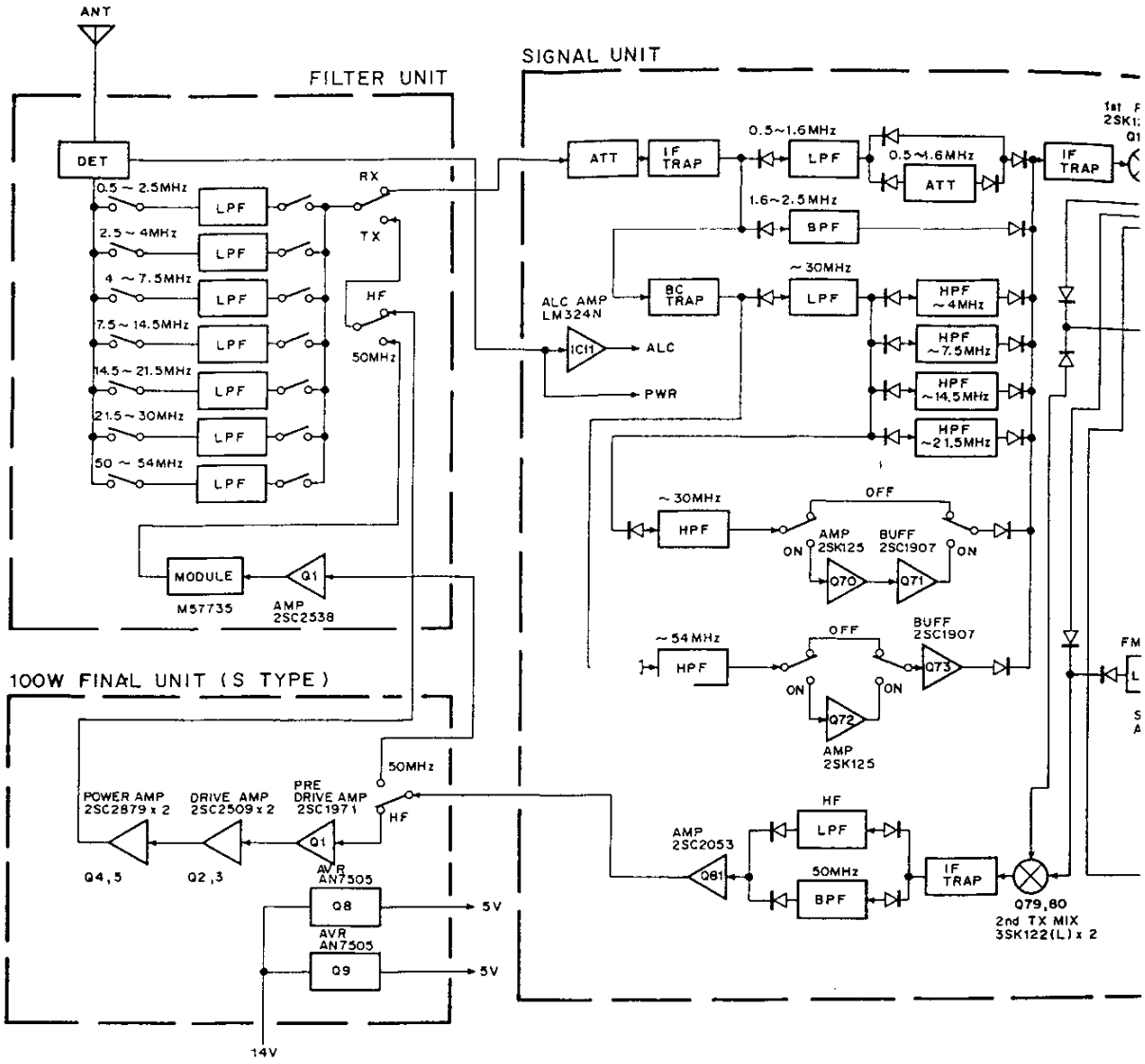
ANT
FILTER UNIT
SIGNAL UNIT
DET
0.5 ~ 2.5MHz
2.5 ~ 4MHz
4 ~ 7.5MHz
7.5 ~ 14.5MHz
14.5 ~ 21.5MHz
21.5 ~ 30MHz
50 ~ 54MHz
LPF
RX
TX
HF
50MHz
MODULE
M57735
Q1
AMP
2SC2538
100W FINAL UNIT (S TYPE)
POWER AMP
2SC2879 x 2
DRIVE AMP
2SC2509 x 2
PRE
DRIVE AMP
2SC1971
Q4,5
Q2,3
AVR
AN7505
Q8
Q9
5V
14V
ATT
IF
TRAP
0.5~1.6MHz
1.6~2.5MHz
BPF
BC
TRAP
~30MHz
ALC AMP
LM324N
IC11
ALC
PWR
HPF
~4MHz
~7.5MHz
~14.5MHz
~21.5MHz
~54MHz
OFF
ON
AMP
2SK125
BUFF
2SC1907
Q70
Q71
Q72
Q73
AMP
2SC2053
Q81
Q79,80
2nd TX MIX
3SK122(L) x 2
CONTROL UN

BLOCK DIAGRAM (TS-680S)

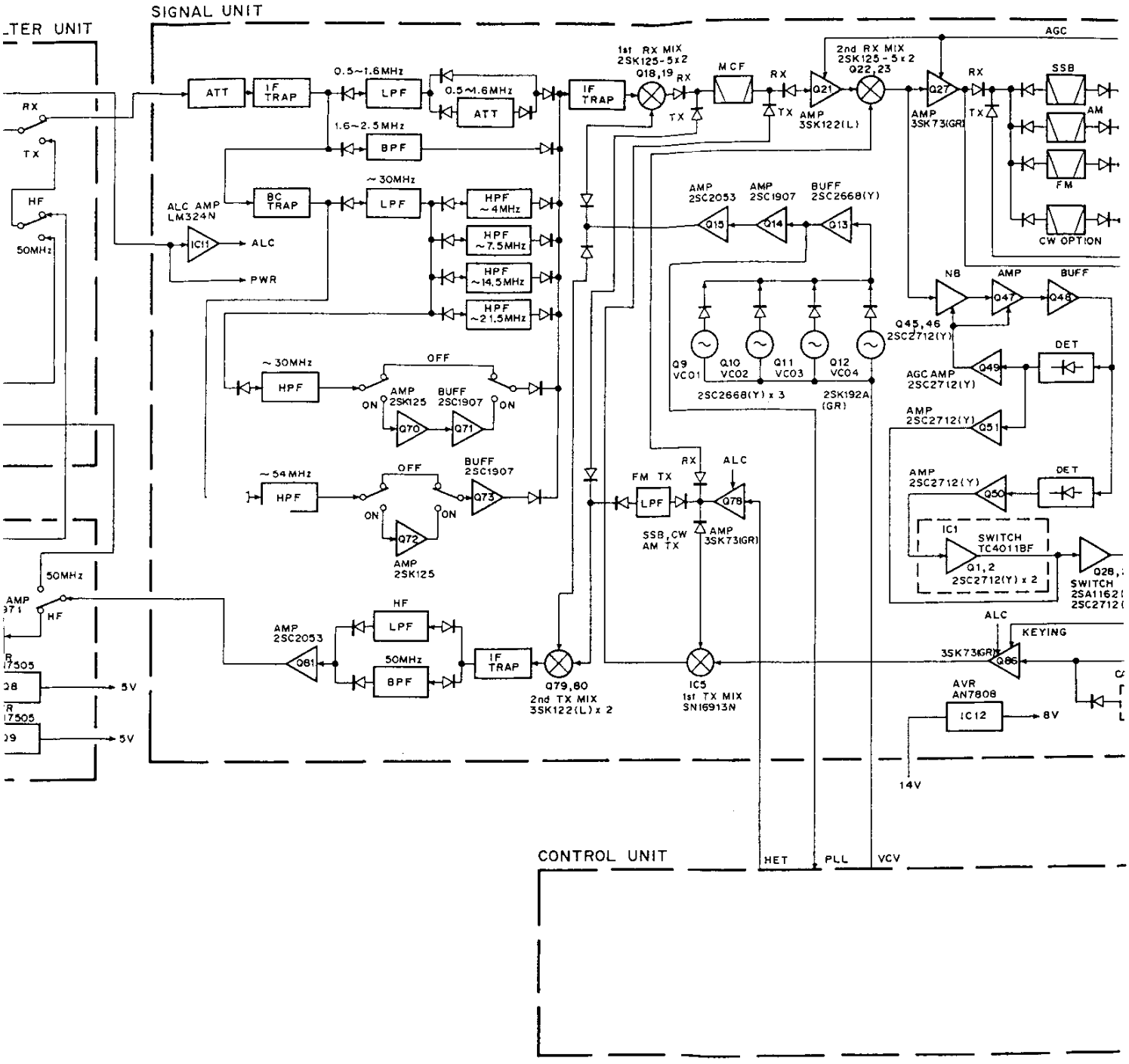

GRAM (TS-680S)

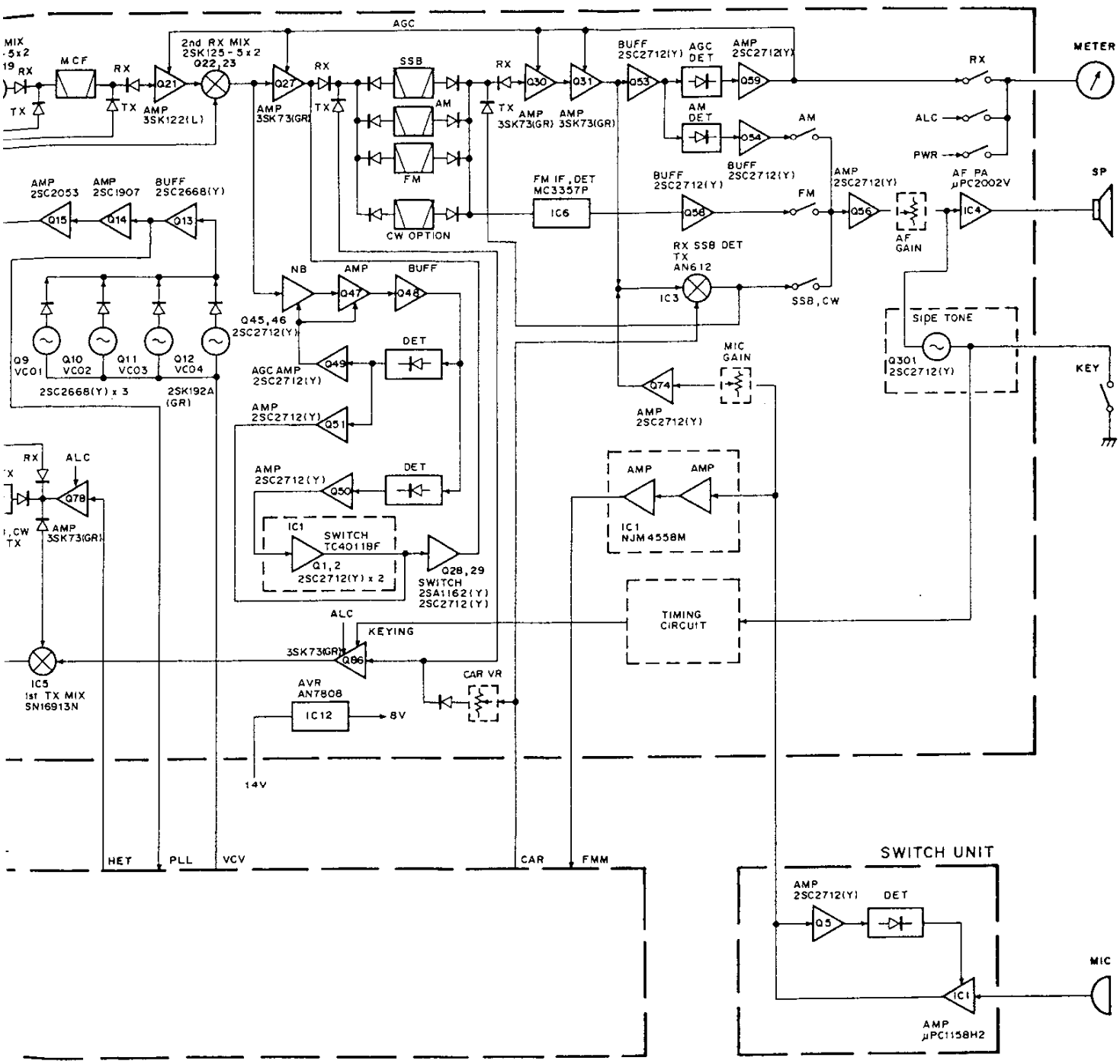

FOR SERVICE MANUALS
CONTACT:
MAURITRON TECHNICAL SERVICES
www.mauritron.co.uk
TEL: 01844 - 351694
FAX: 01844 - 352554

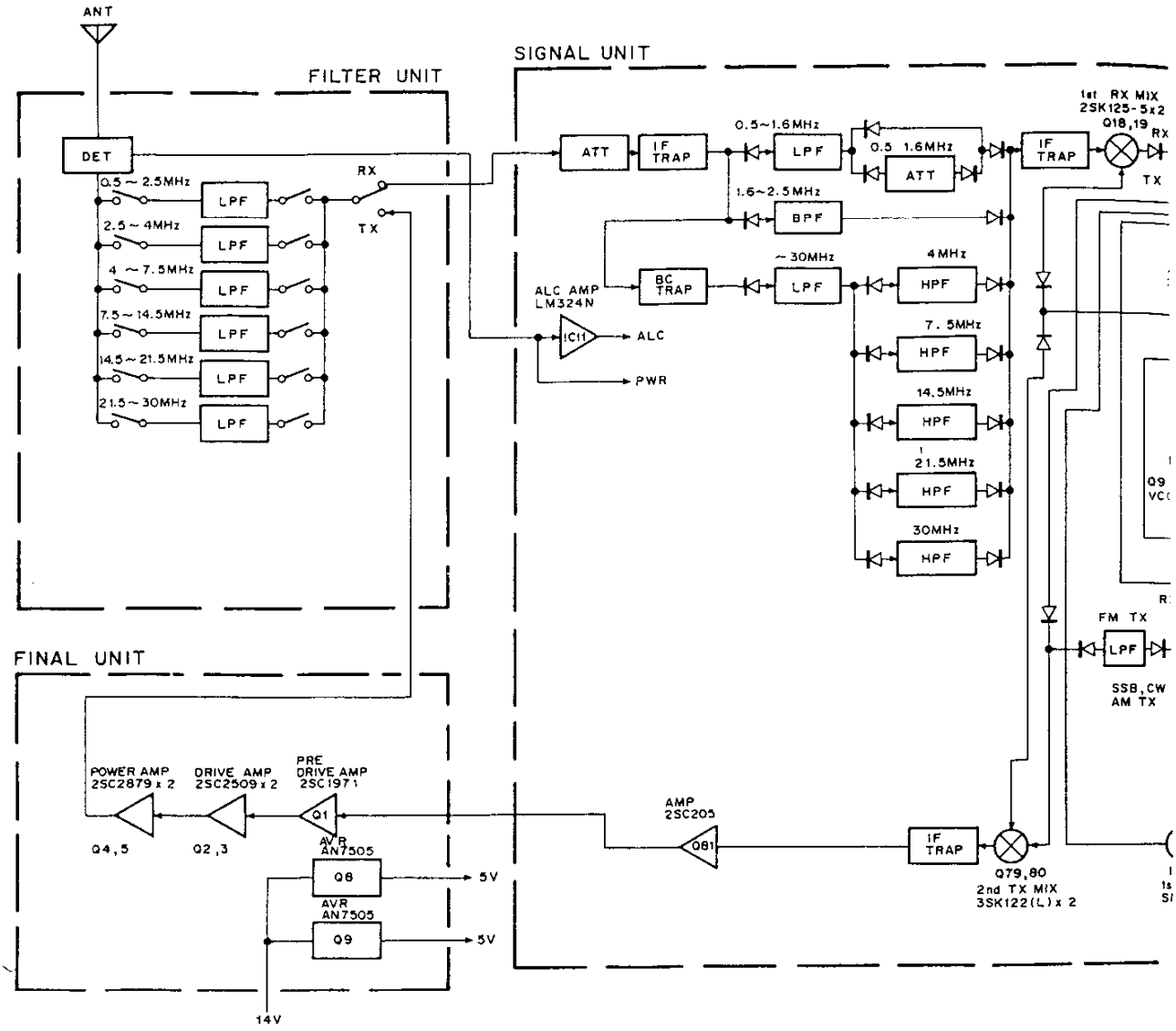

CONTROL UNIT

BLOCK DIAGRAM (TS-140S)

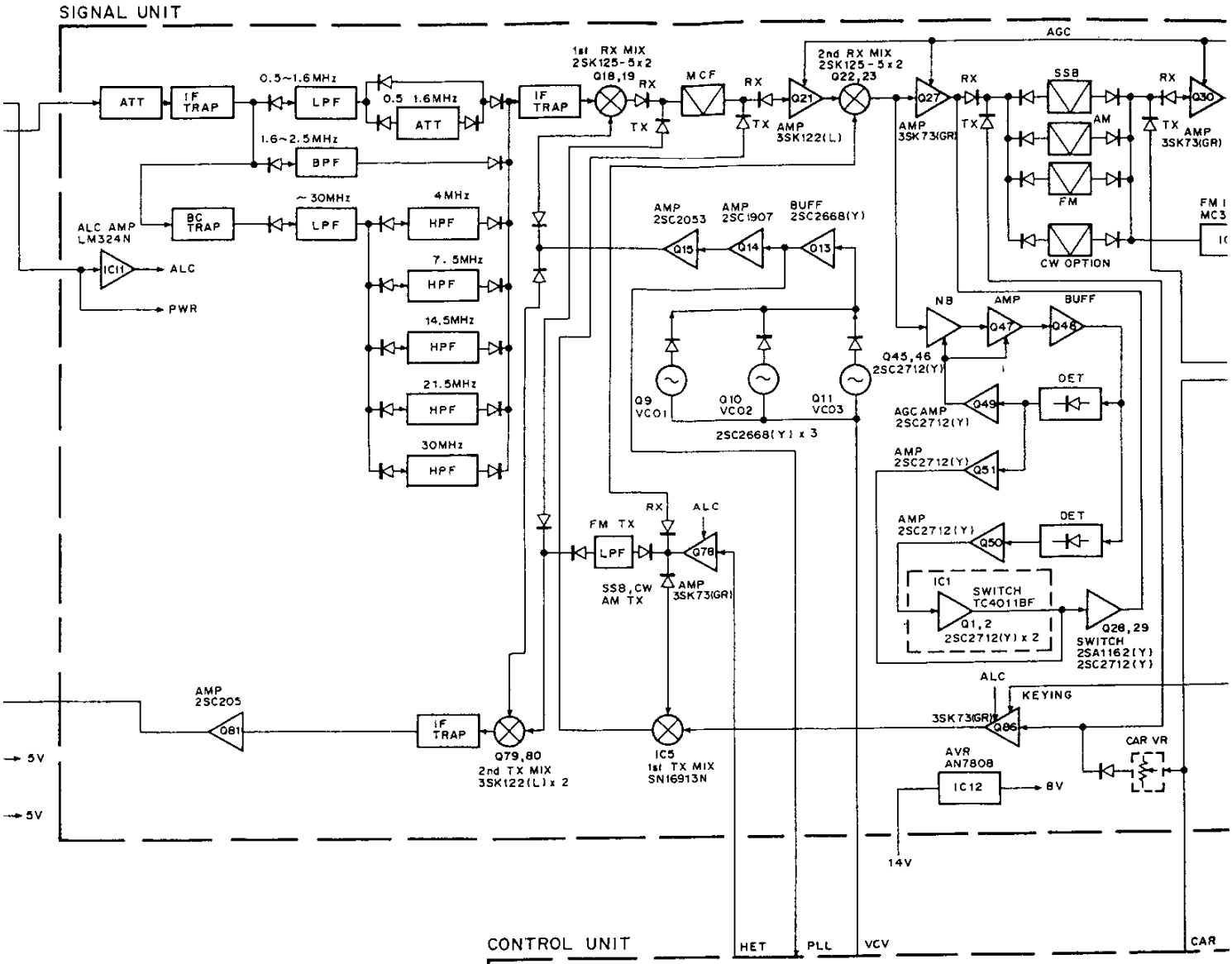

FOR SERVICE MANUALS
CONTACT:
MAURITRON TECHNICAL SERVICES
www.mauritron.co.uk
TEL: 01844 - 351694
FAX: 01844 - 352554

IAGRAM (TS-140S)

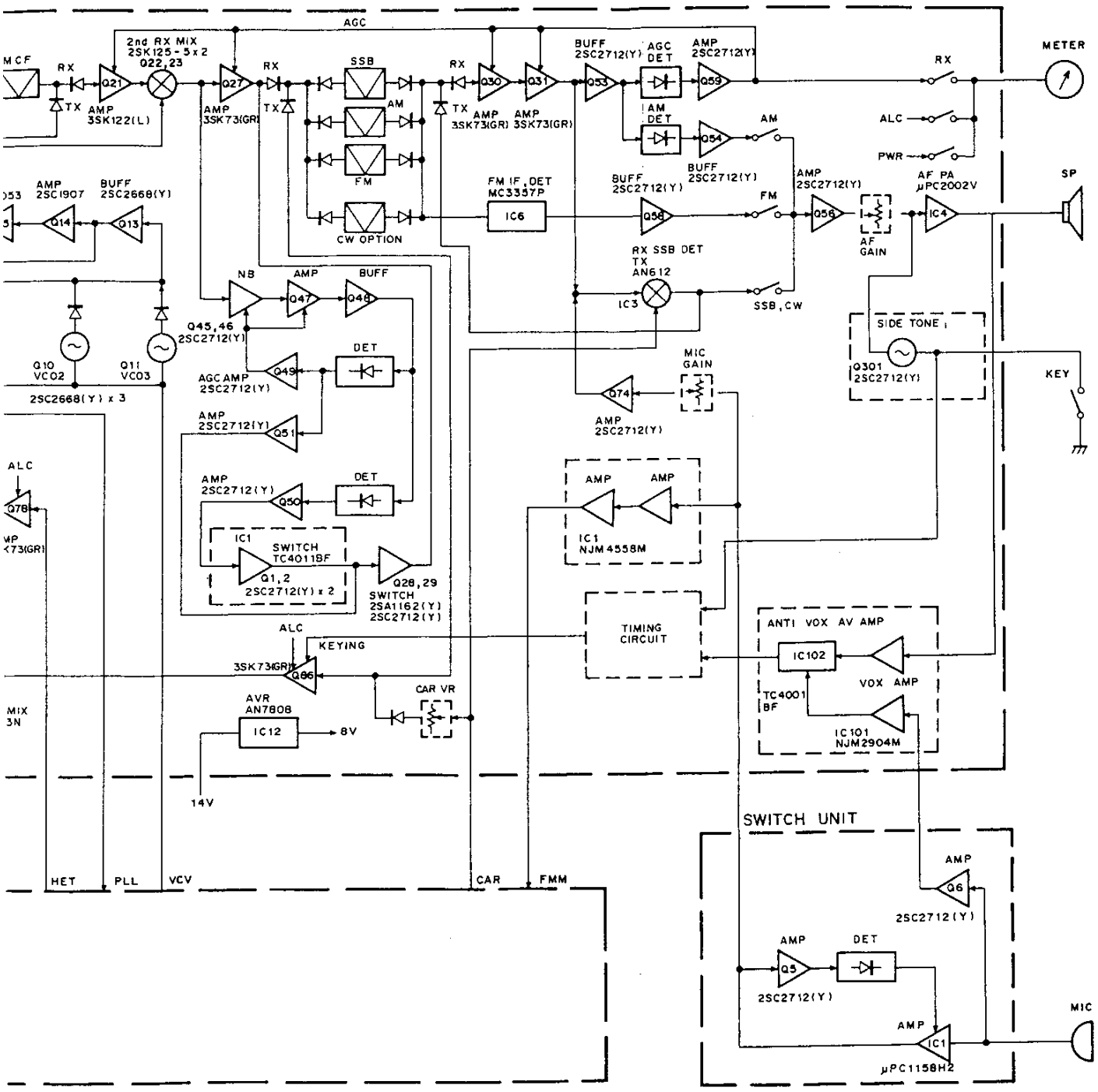

TS-140S/680S CIRCUIT DIAGRAM

CONTROL UNIT (X53-3100-XX)

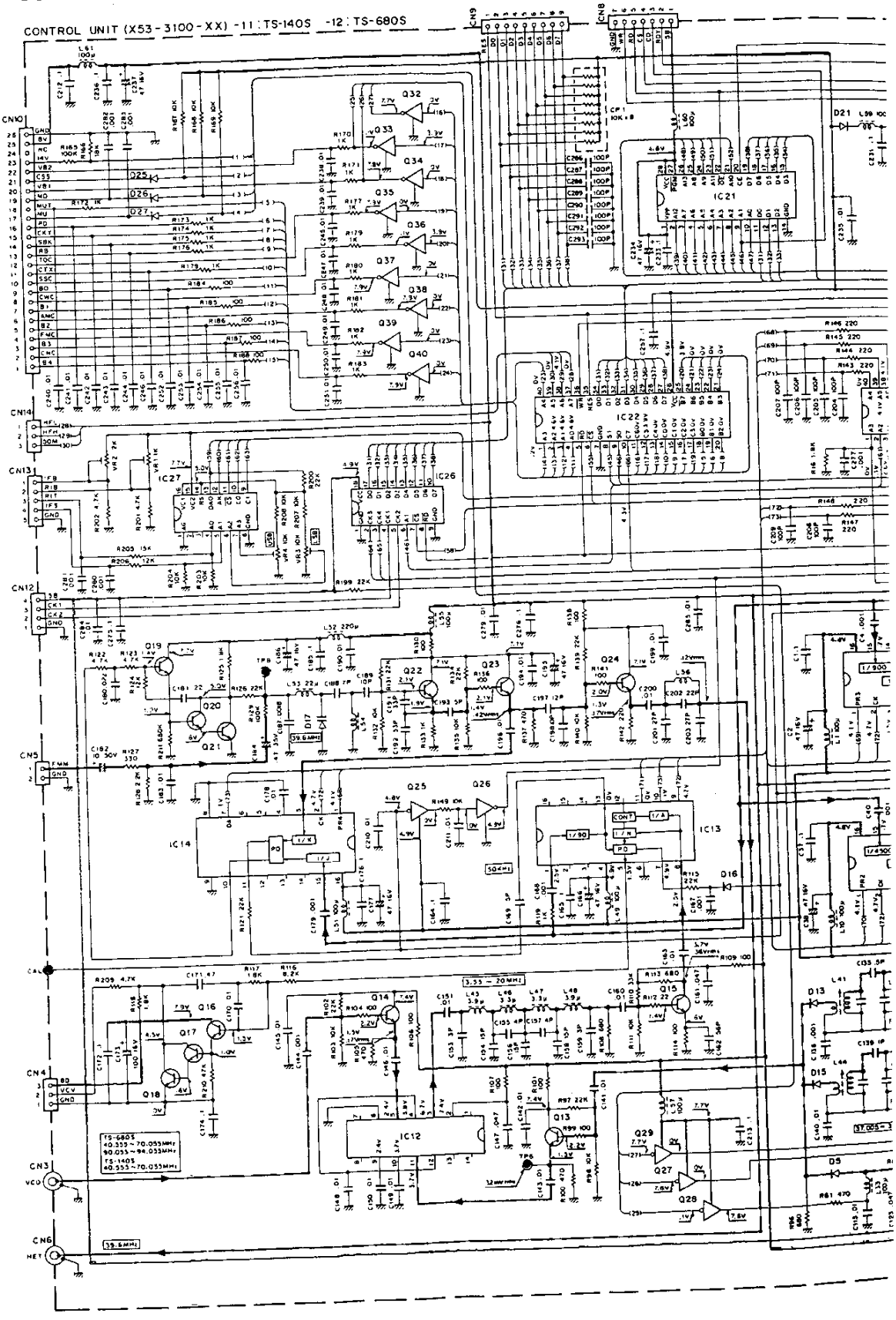

CIRCUIT DIAGRAM

FOR SERVICE MANUALS
CONTACT:
MAURITRON TECHNICAL SERVICES
www.mauritron.co.uk
TEL: 01844 - 351694
FAX: 01844 - 352554

)-XX)

-140S -12 TS-680S

Volta

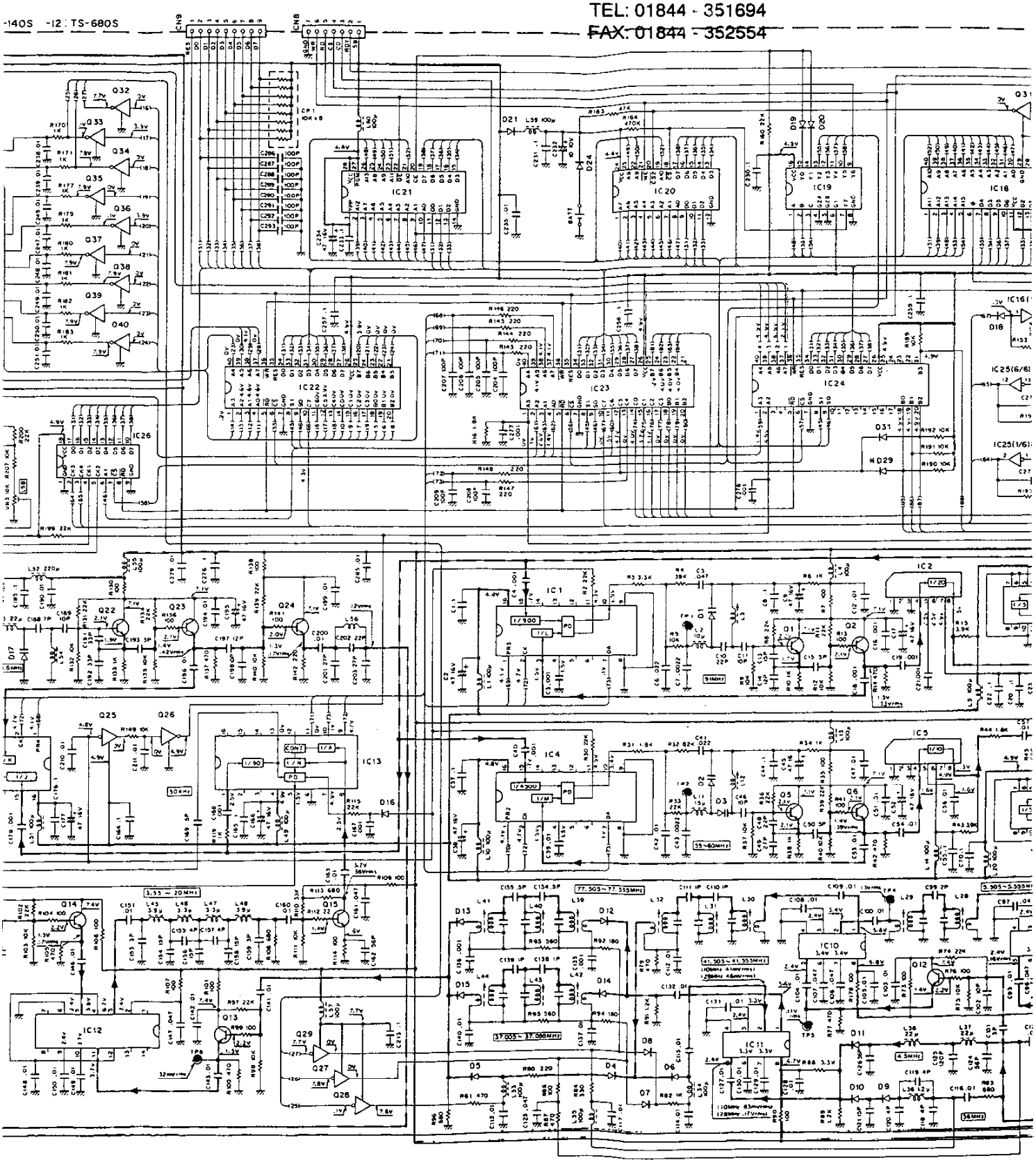

Voltage measurement condition f = 14MHz, Mode : USB. ( ) : TX.

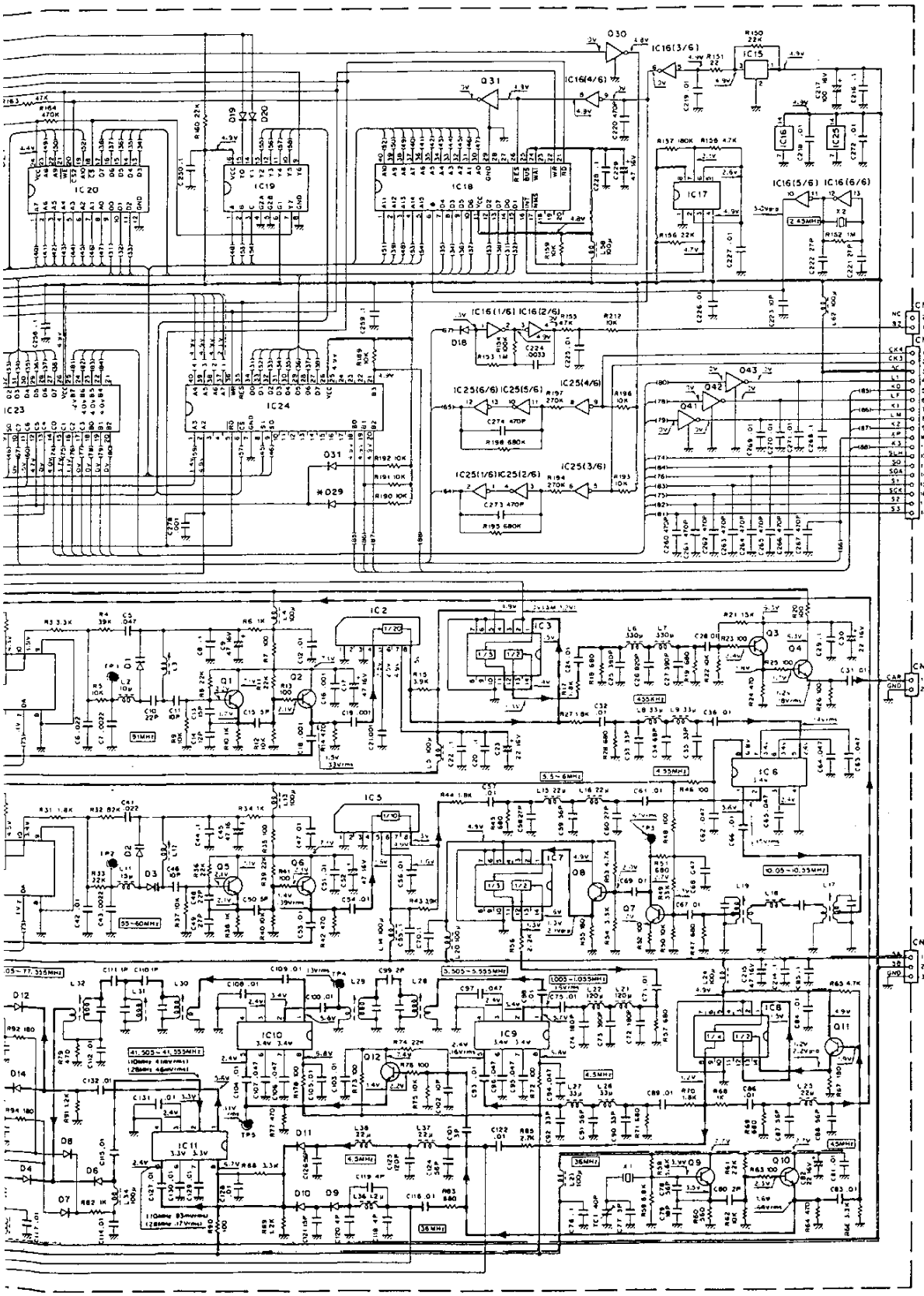

D1	: 1SV53A
D2,3	: 1T310TE
D4 ~ 6, 9 ~ 15	: RLS135
D7,8,16, 18 ~ 21, 24 ~ 27	: RLS73
D17	: 1SV153
D29,31 (D29: TS-140S ONLY)	: 1SS133
IC1,4,14	: M54927P
IC2	: M54459L
IC3,7	: SN74LS90N
IC5	: M54460L
IC6,9,10,11	: SN16913P
IC8	: M74LS93P
IC12	: SN76514N
IC13	: MB87006A
IC15	: PST5200
IC16,25	: TC4069UBP
IC17	: NE555C
IC18	: BU1840OA
IC19	: SN74LS138N
IC20	: TC5518CPL - 20
IC21	: MBM27C128 - 25JAJ2
IC22 ~ 24	: TMP8255AP - 5
IC26	: LZ92K37
IC27	: M84052
Q1,2,5,6, 10 ~ 15, 22 ~ 24	: 2SC2668(Y)
Q3,7,8	: 2SC2458(Y)
Q4	: 2SC1959(Y)
Q9	: 2SC2787 (L)
Q16 ~ 21	: 2SC2459(BL)
Q25	: DTA124ES
Q26	: DTC124ES
Q27 ~ 29	: DTA143ES
Q30 ~ 40	: DTC144WS
Q41 ~ 43	: DTC143TS

FOR SERVICE MANUALS
CONTACT:
MAURITRON TECHNICAL SERVICES
www.mauritron.co.uk
TEL: 01844 - 351694
FAX: 01844 - 352554

CONTROL UNIT (X53-3100-XX) -11 : TS-140S -12 : TS-680S Component side view

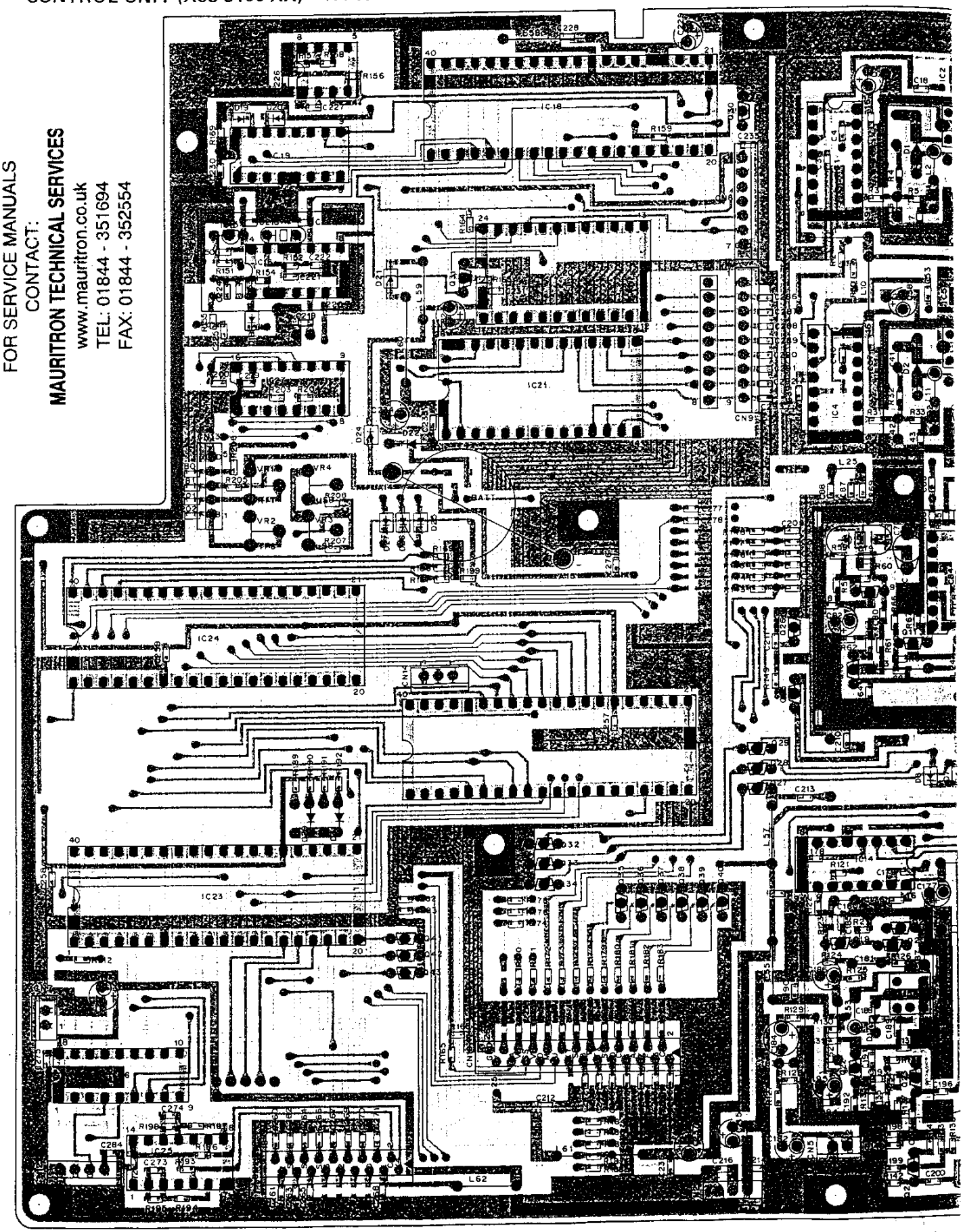

S-140S -12 : TS-680S Component side view

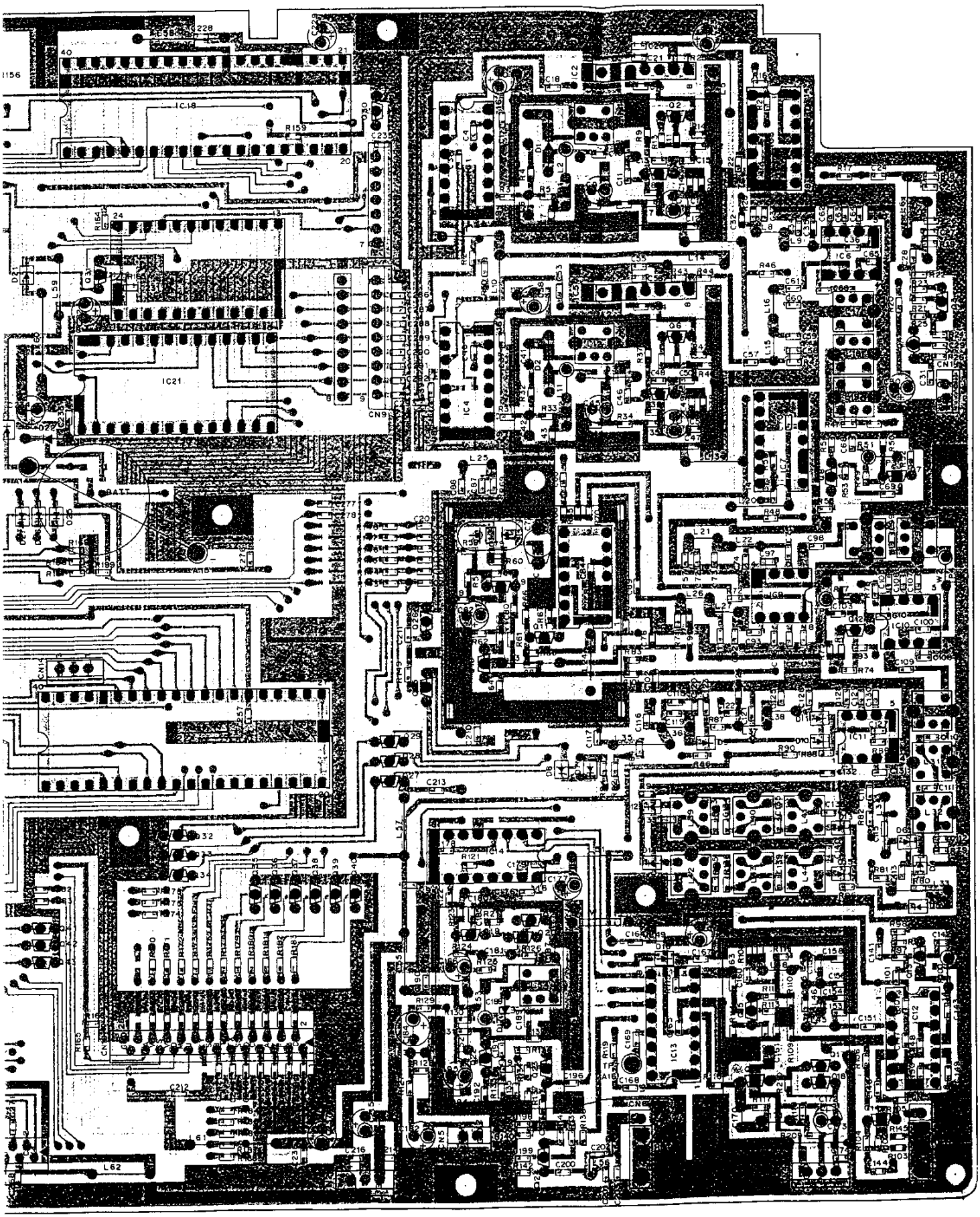

FOR SERVICE MANUALS
CONTACT:
MAURITRON TECHNICAL SERVICES
www.mauritron.co.uk
TEL: 01844 - 351694
FAX: 01844 - 352554

CONTROL UNIT (X53-3100-XX) -11 : TS-140S -12 :

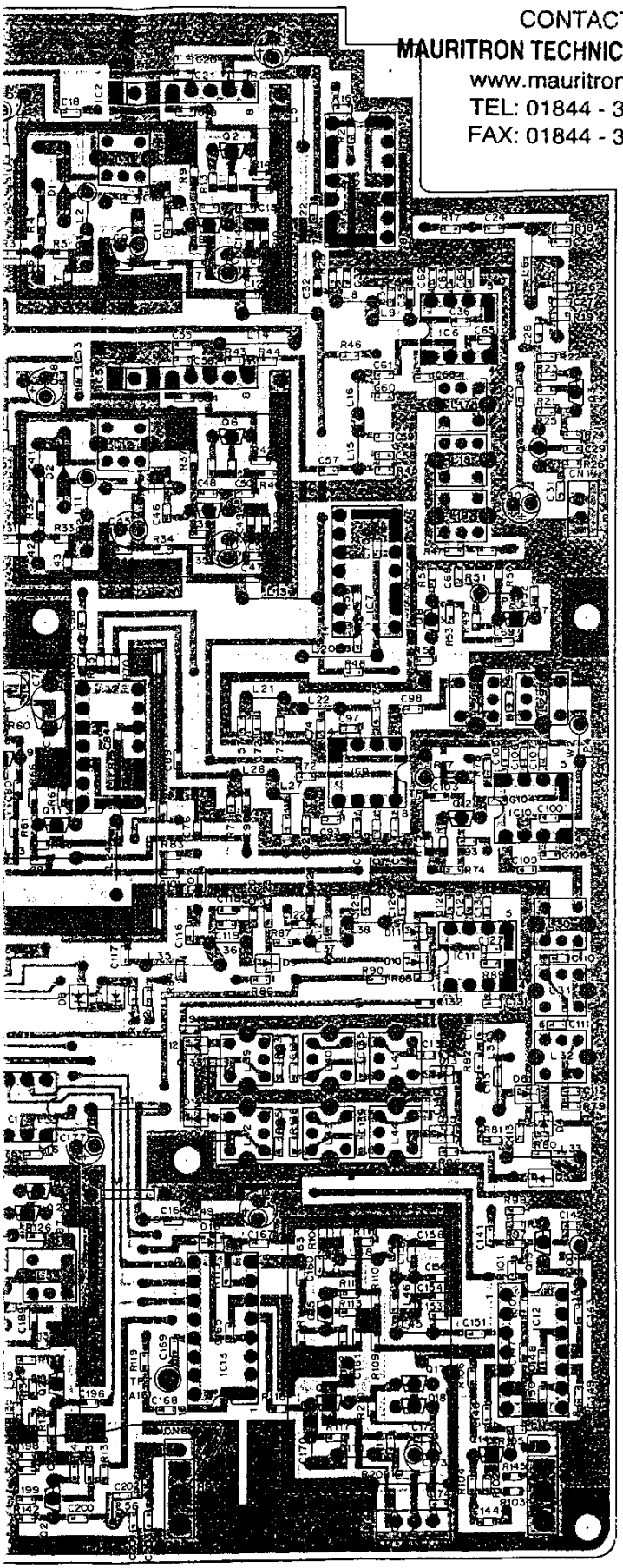

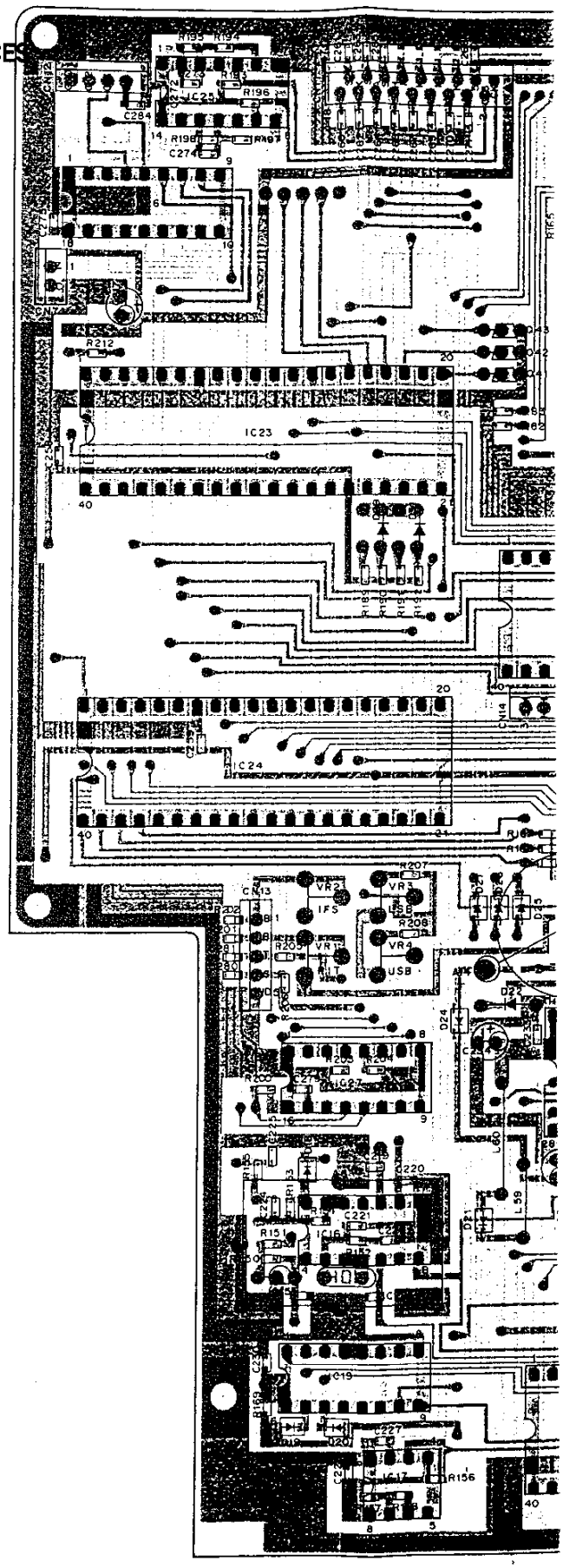

ONTROL UNIT (X53-3100-XX) -11 : TS-140S -12 : TS-680S Foil side view

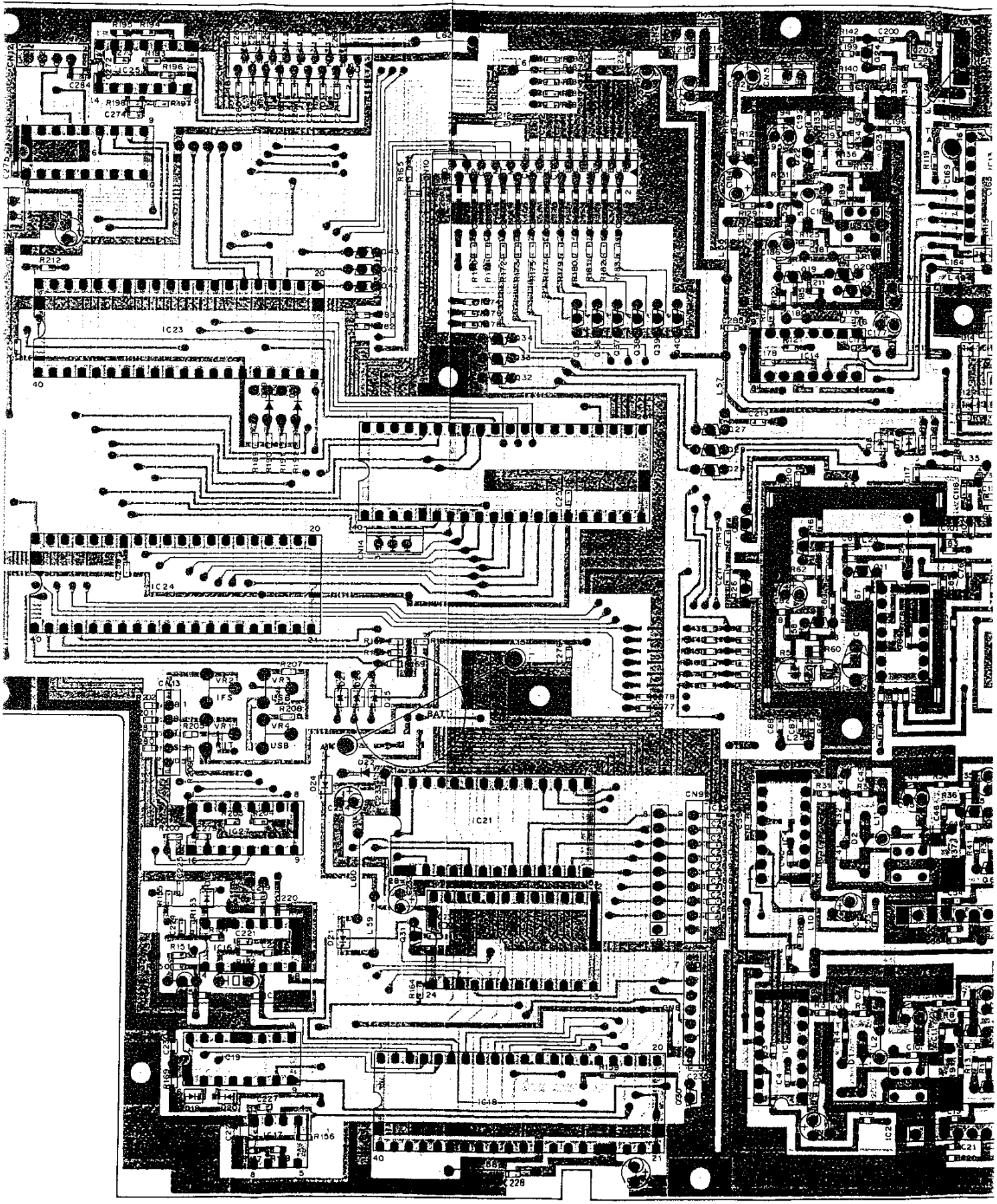

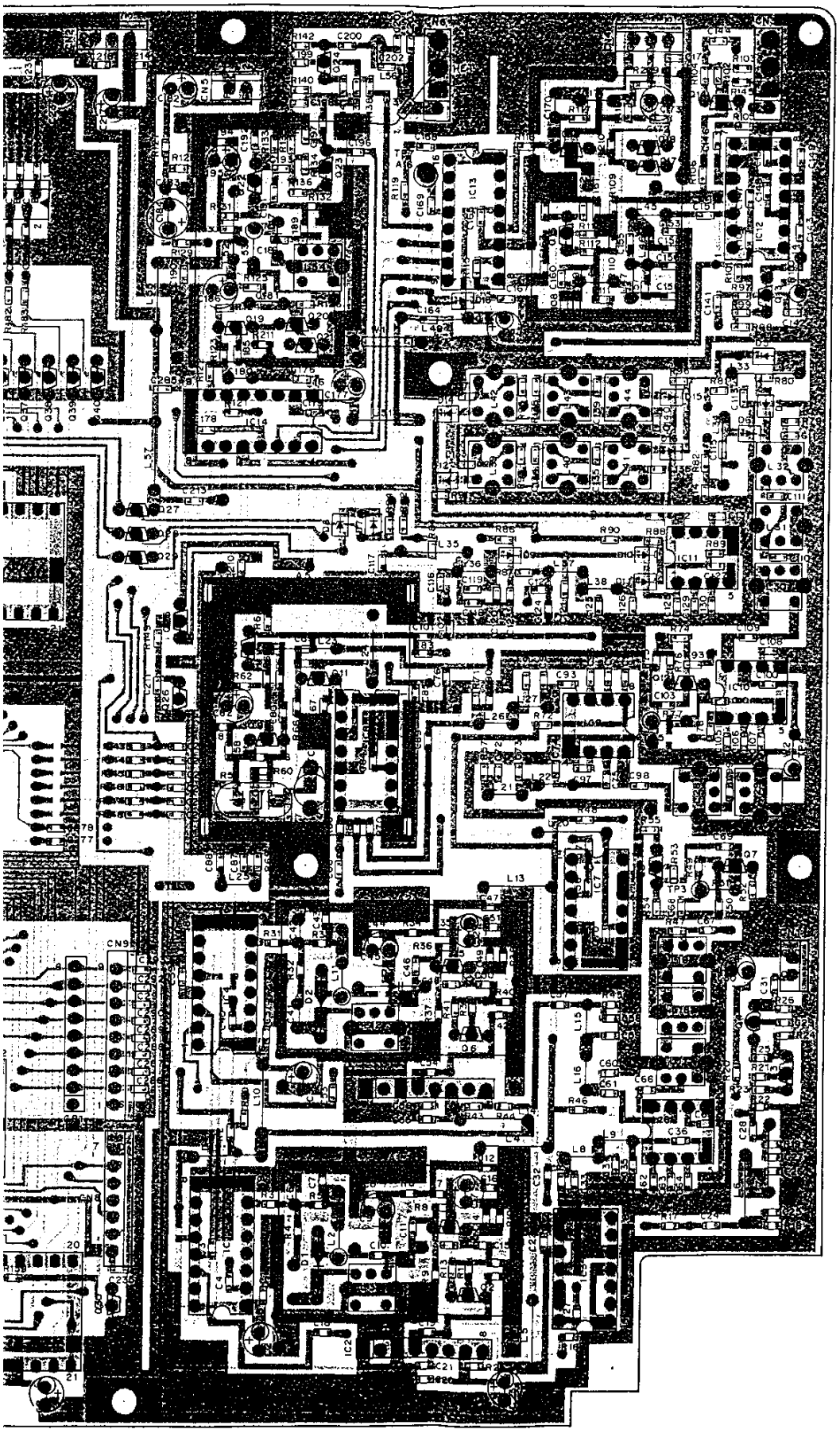

FOR SERVICE MANUALS
CONTACT:
MAURITRON TECHNICAL SERVICES
www.mauritron.co.uk
TEL: 01844 - 351694
FAX: 01844 - 352554

2SC1959(Y)
2SC1971

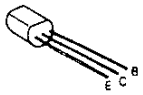

MB87006
MB4052

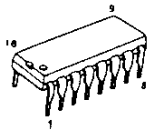

2SC2787(L)

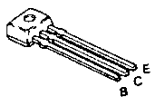

2SC2509

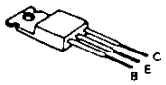

PST520D

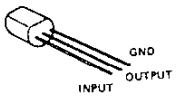

DTC124ES

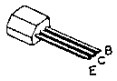

2SD1406(Y)

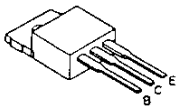

TC4069UBP

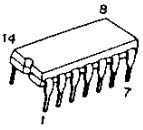

M74LS93P
SN76514N

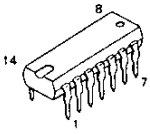

FOR SERVICE MANUALS
CONTACT:
MAURITRON TECHNICAL SERVICES
www.mauritron.co.uk
TEL: 01844 - 351694
FAX: 01844 - 352554

AN7805

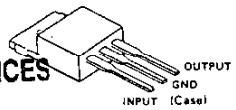

SN74LS138N

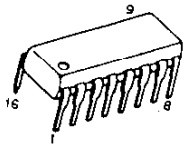

BU18400A

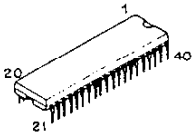

M54927P

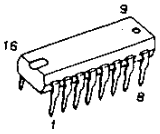

TC5518CPL-20

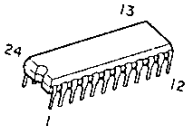

MBM27C128-25JAJ2

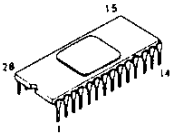

M54459L
M54460L

TMP8255AP-5

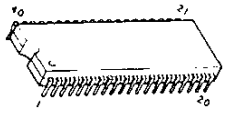

SN74LS90N

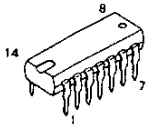

LZ92K37

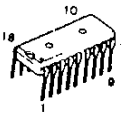

SN16913P
NE555C

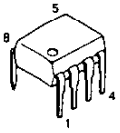

2SC2458(Y) DTA143ES
2SC2459(BL) DTC144WS
2SC2668(Y) DTC143TS
DTA124ES

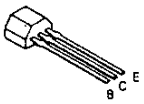

TS-140S/680S PC BOARD VIEWS (TS-680S)

SIDE TONE (X59-1060-00)

Component side view

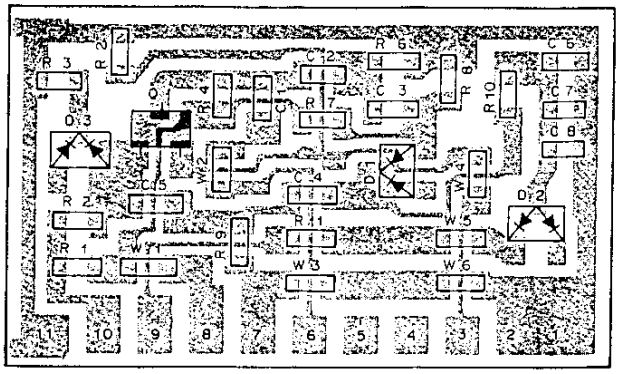

NB2 (X59-3350-00)

Component side view

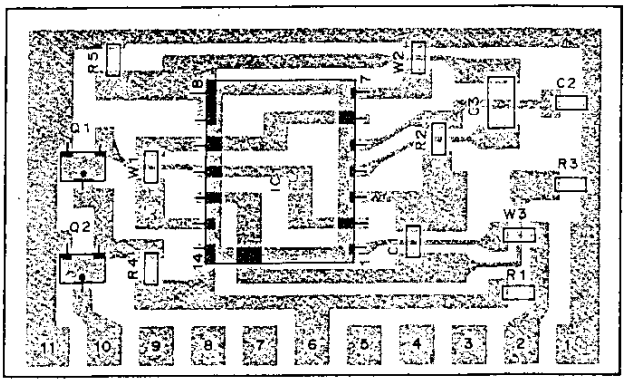

FM MIC AMP. (X59-3000-02)

Component side view

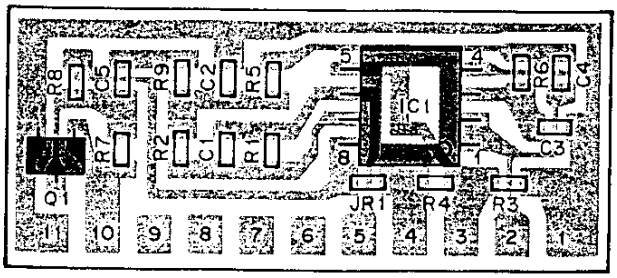

DELAY TIME (X59-3360-00)

Component side view

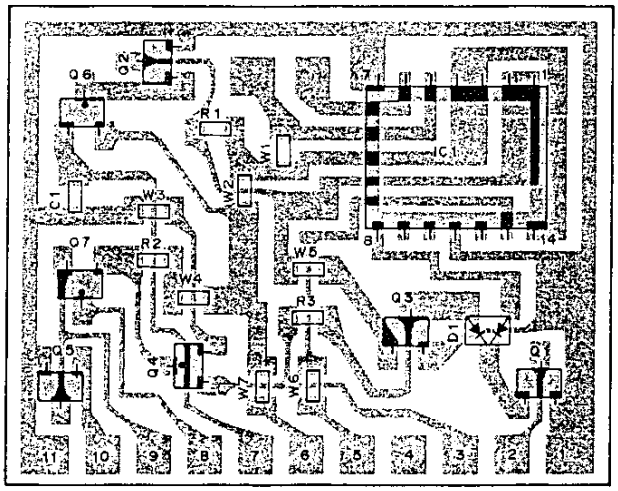

TRX (X59-3340-00)

Component side view

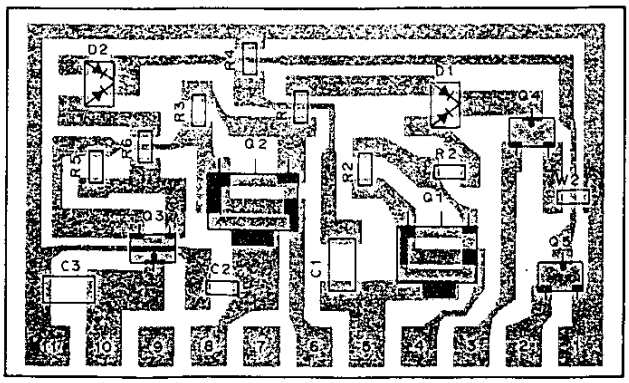

FOR SERVICE MANUALS
CONTACT:
MAURITRON TECHNICAL SERVICES
www.mauritron.co.uk
TEL: 01844 - 351694
FAX: 01844 - 352554

RD VIEWS (TS-680S)

NB2 (X59-3350-00)
Component side view

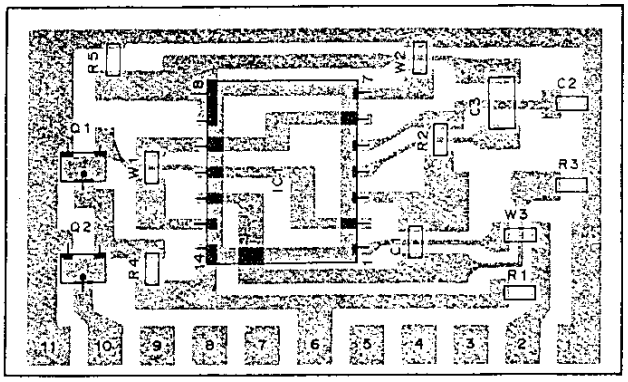

DELAY TIME (X59-3360-00)
Component side view

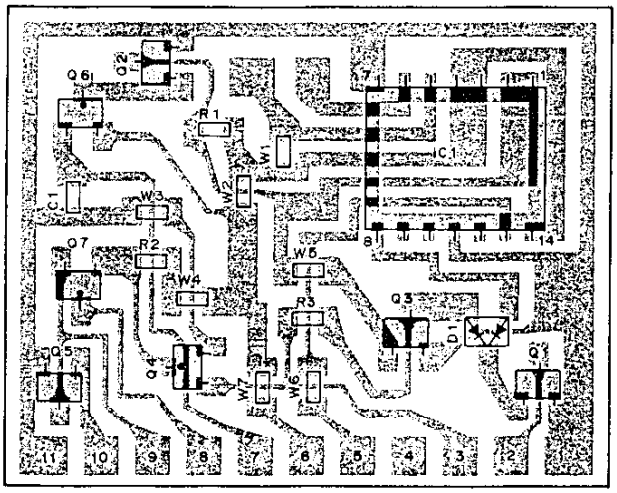

FOR SERVICE MANUALS
CONTACT:
MAURITRON TECHNICAL SERVICES
www.mauritron.co.uk
TEL: 01844 - 351694
FAX: 01844 - 352554

SIGNAL UNIT (X57-3190-00) Component side view

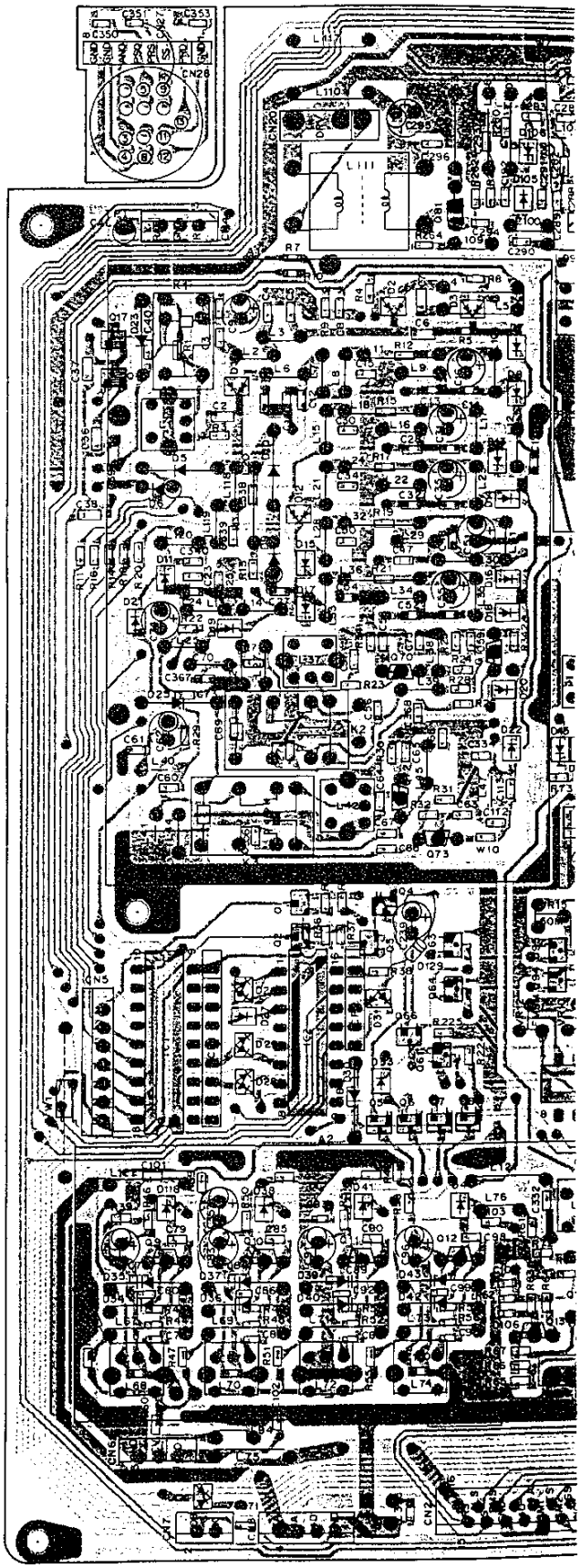

SIGNAL UNIT (X57-3190-00) Component side view

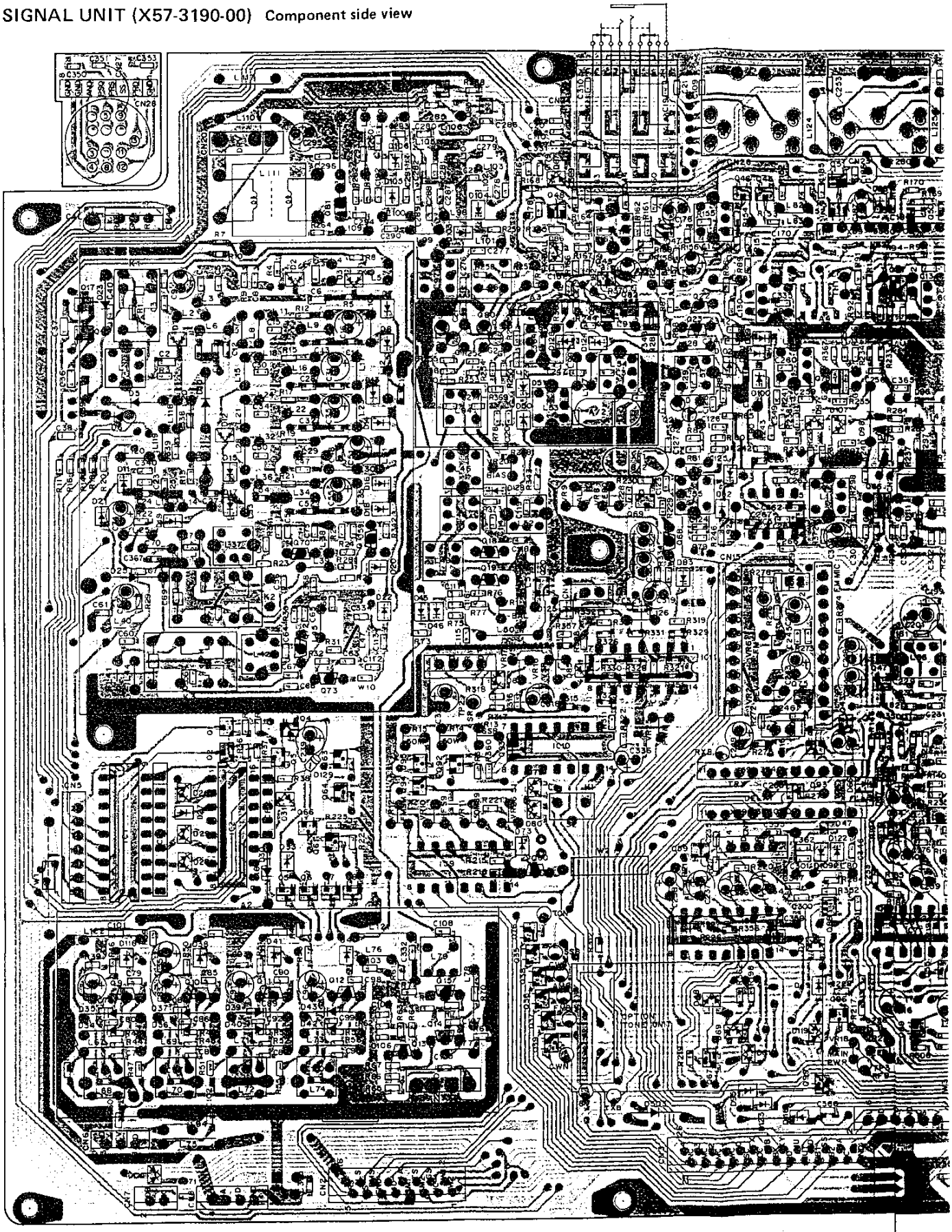

SIGN

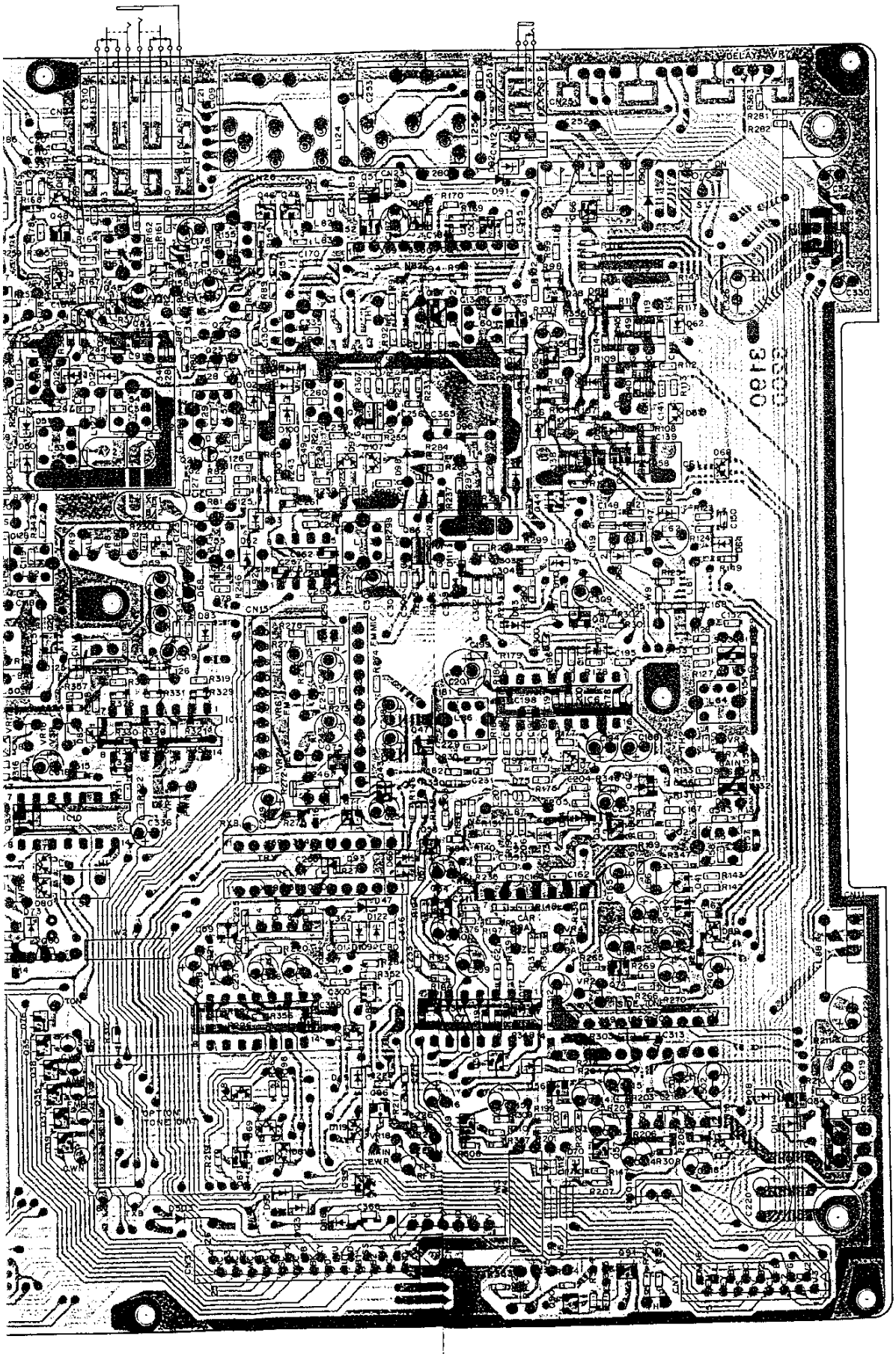

SIGNAL UNIT (X57-3190-00) Foil side view

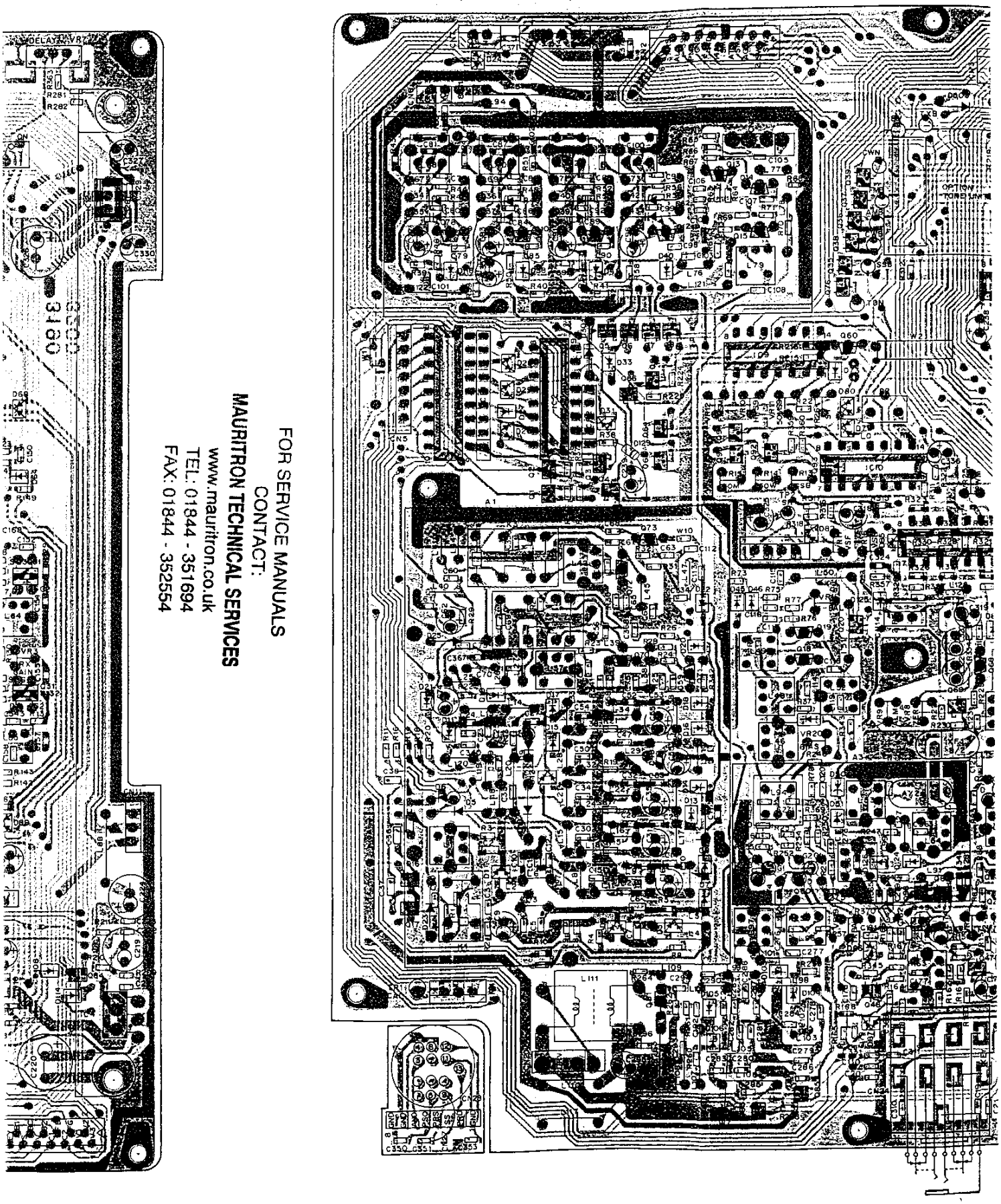

FOR SERVICE MANUALS
CONTACT:
MAURITRON TECHNICAL SERVICES
www.mauritron.co.uk
TEL: 01844 - 351694
FAX: 01844 - 352554

iew

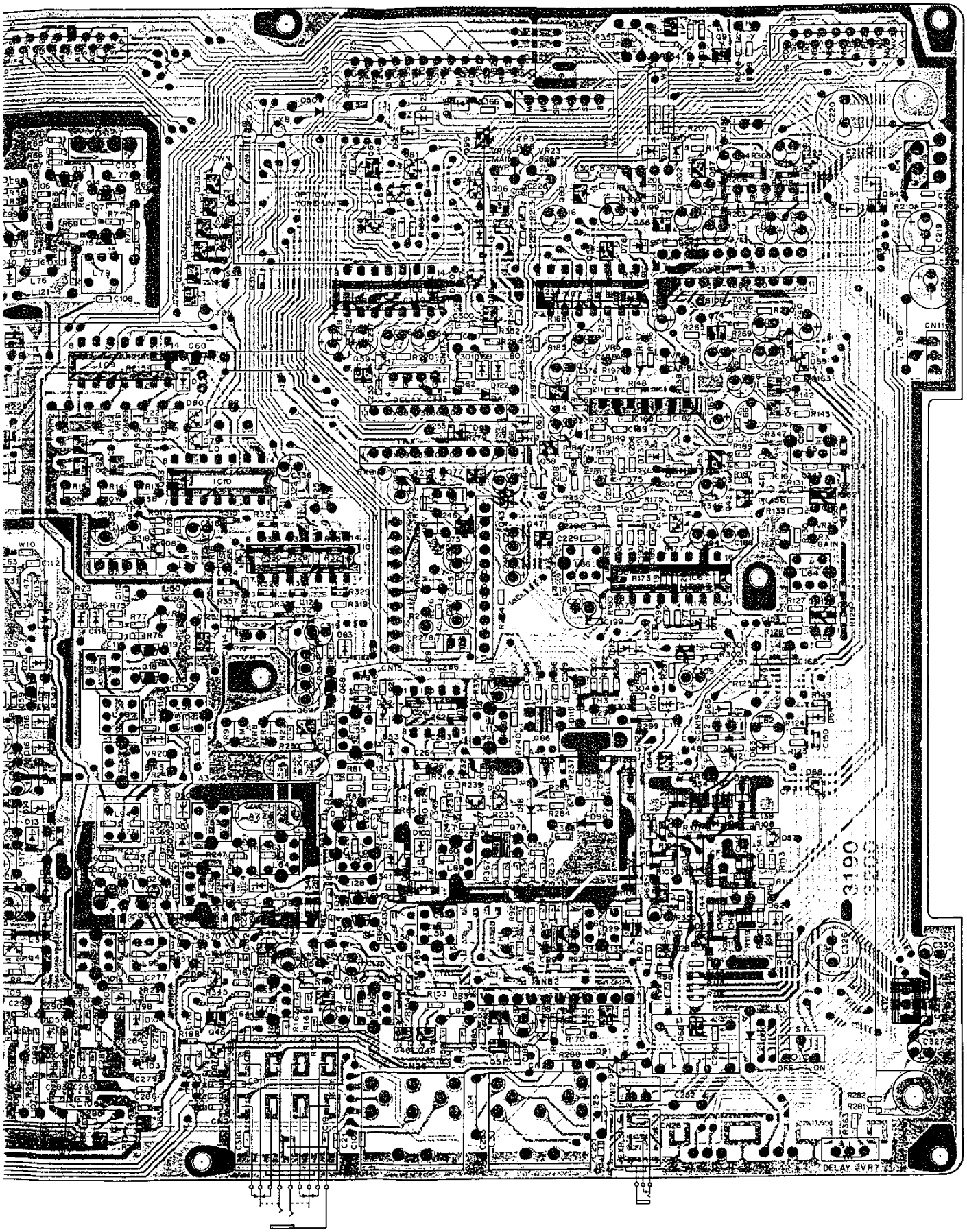

FOR SERVICE MANUALS
CONTACT:
MAURITRON TECHNICAL SERVICES
www.mauritron.co.uk
TEL: 01844 - 351694
FAX: 01844 - 352554

SIGNAL UNIT (X57-3190-00)

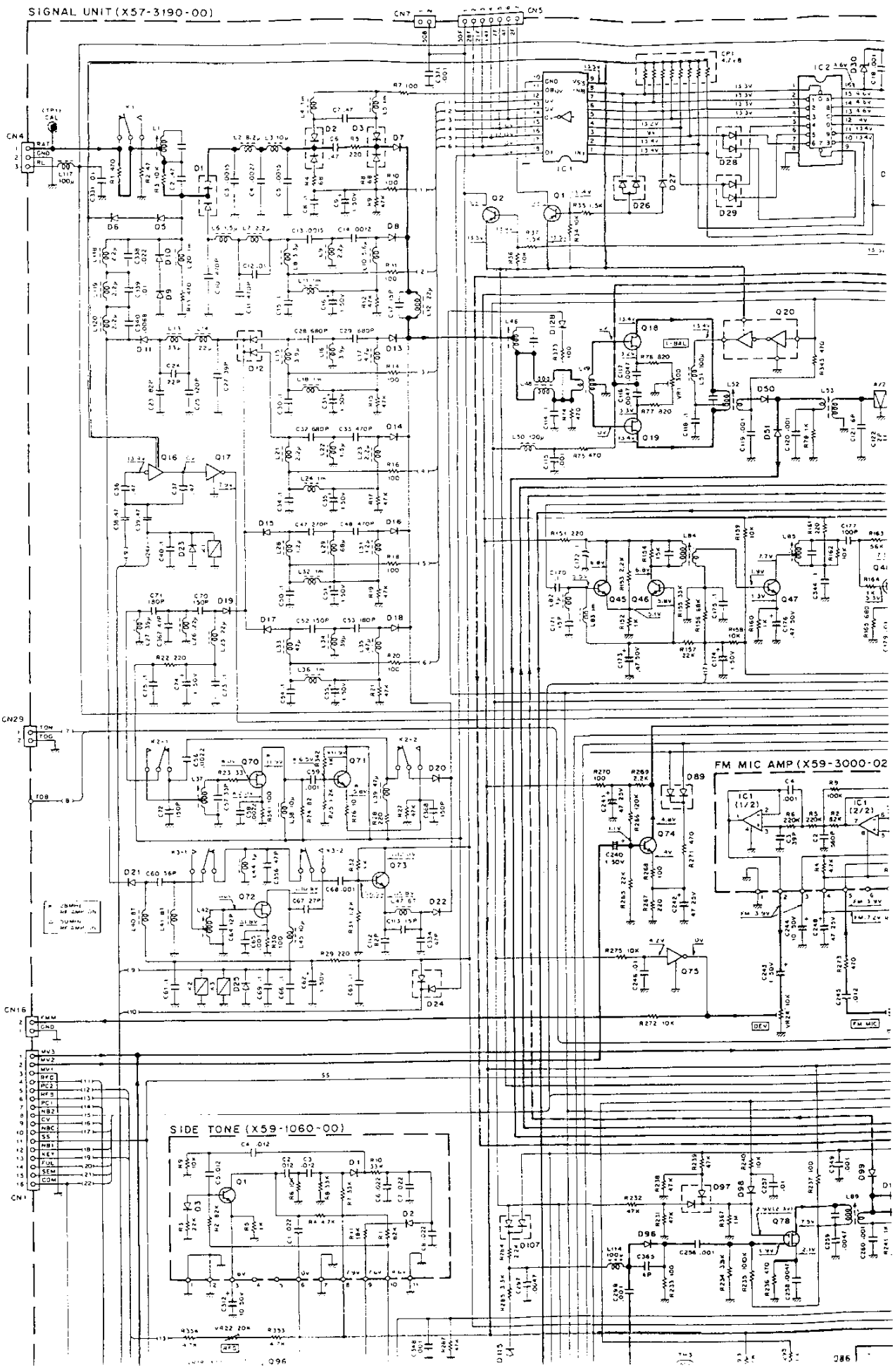

;NAL UNIT (X57-3190-00)

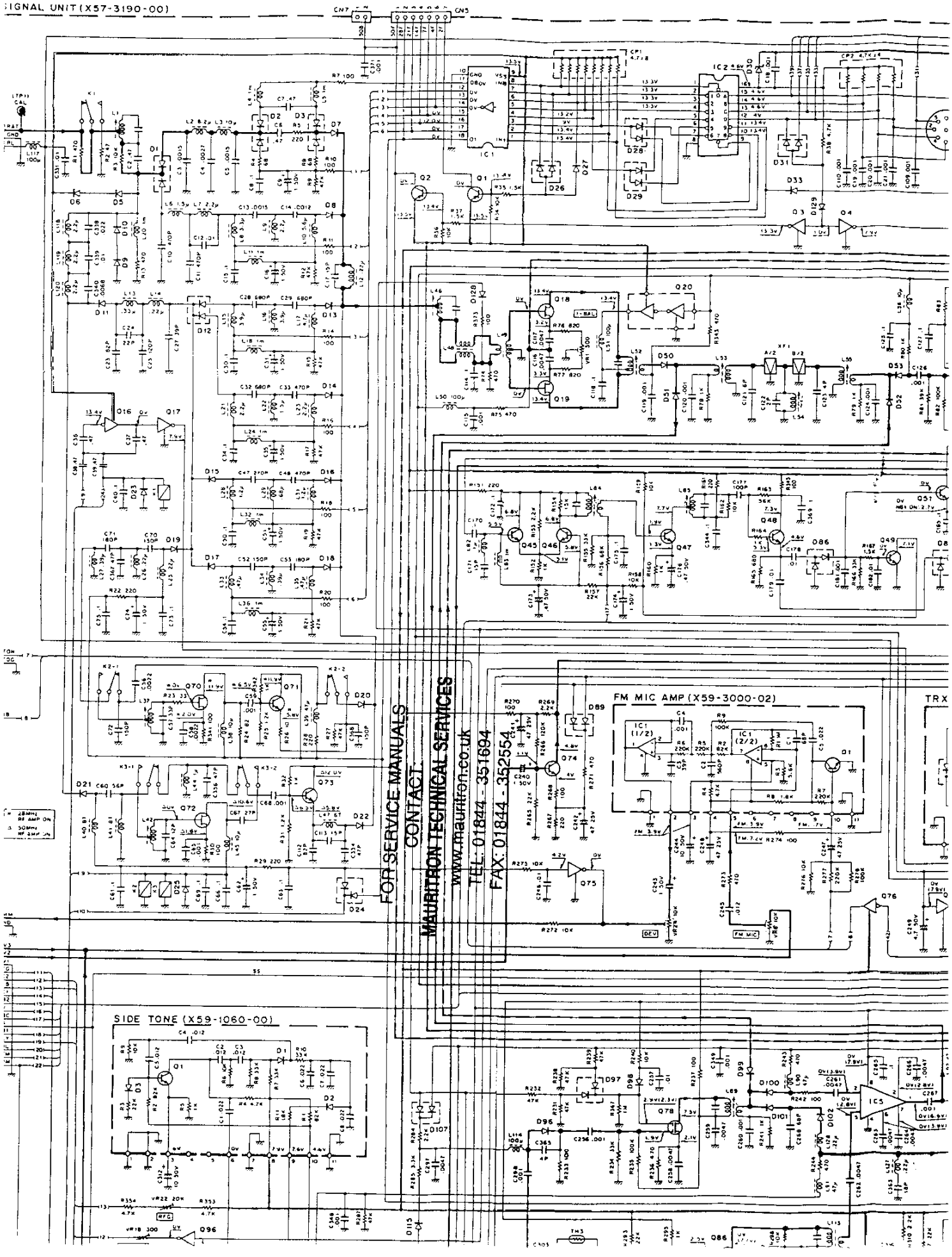

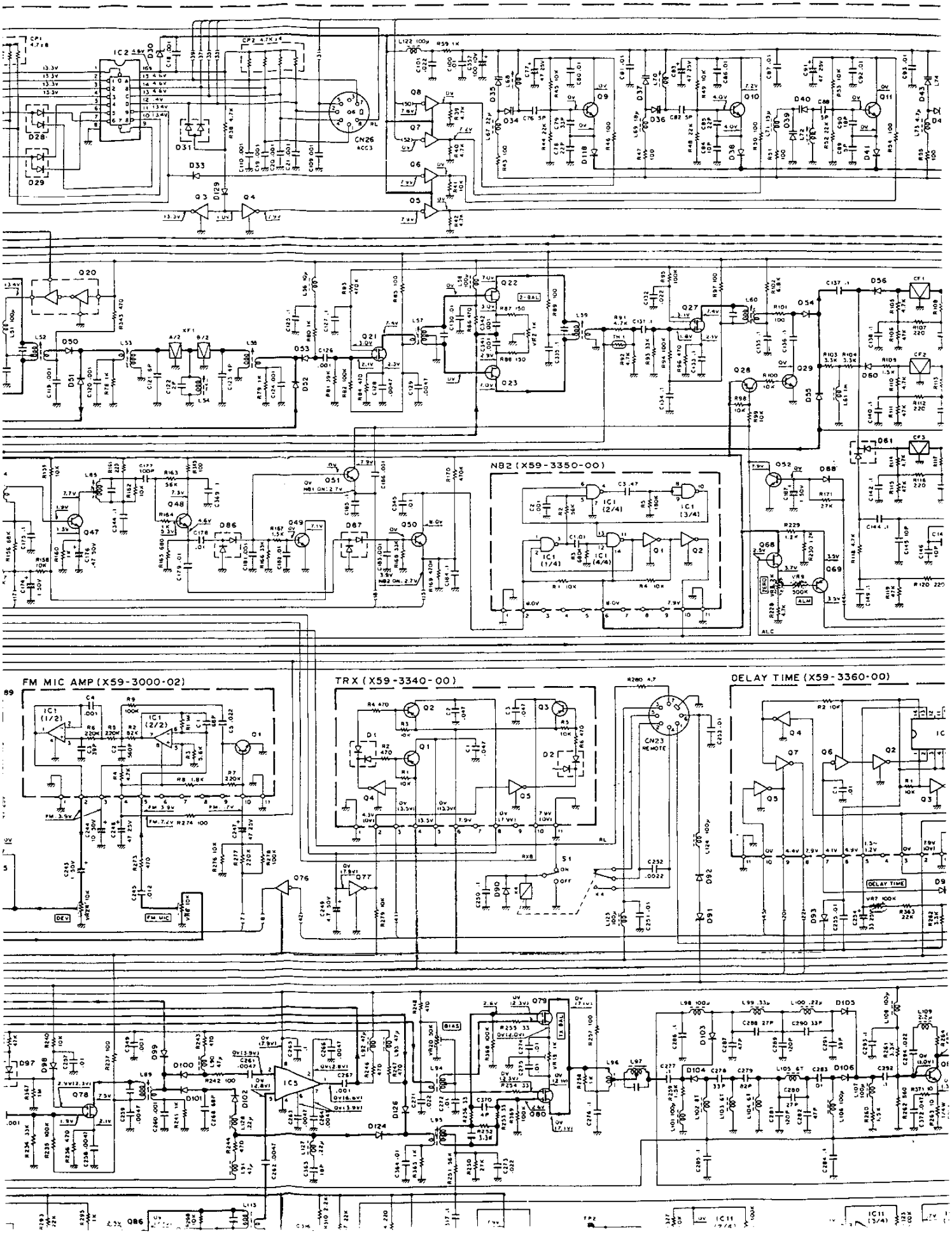
NB2 (X59-3350-00)
FM MIC AMP (X59-3000-02)
TRX (X59-3340-00)
DELAY TIME (X59-3360-00)

Voltage measurement condition f = 14MHz, Mode : USB. ( ) : TX.

CIRCUIT DI

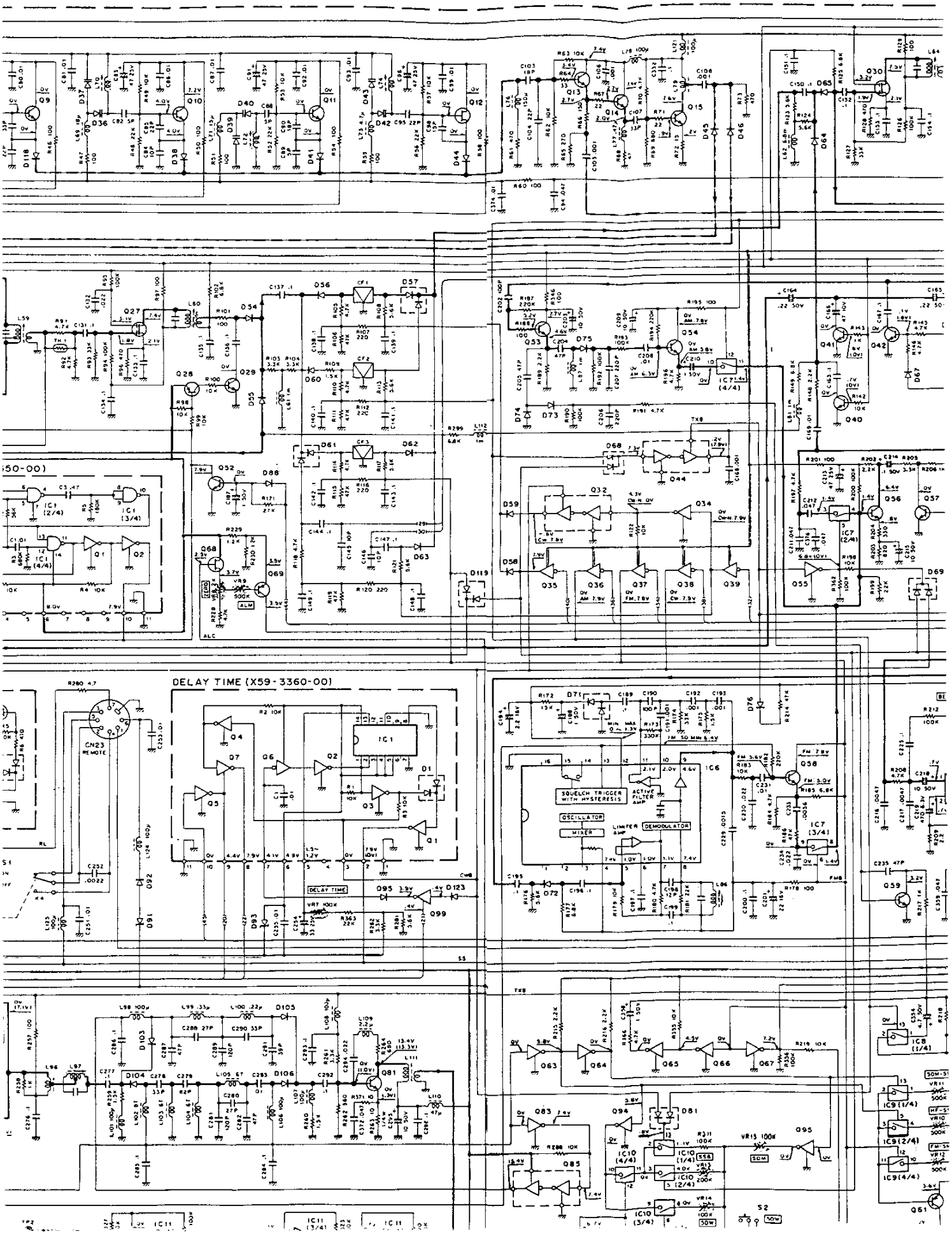

= 14MHz, Mode : USB. ( ) : TX.

CIRCUIT DIAGRAM (TS-680S) TS-140S/680S

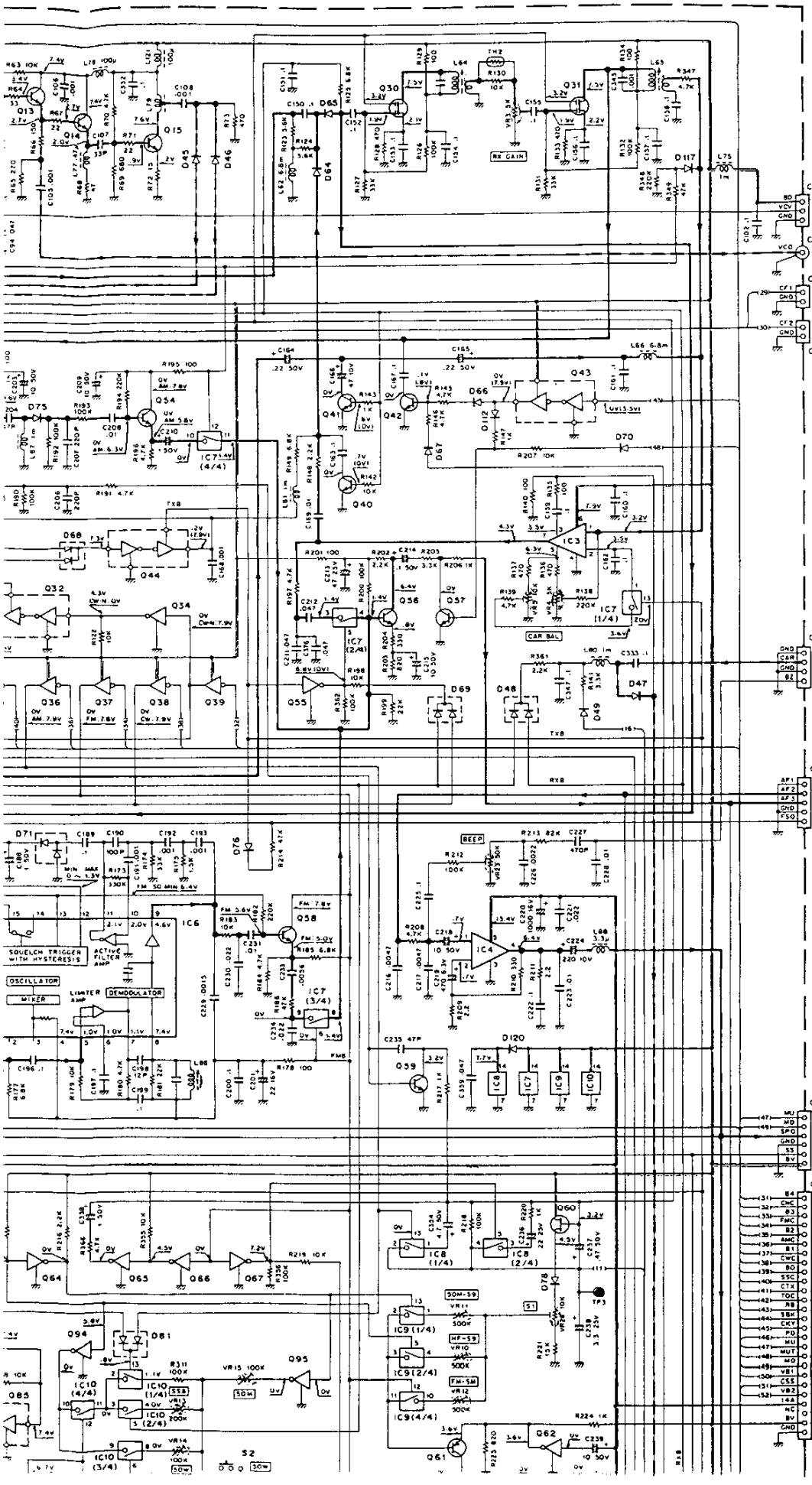

FOR SERVICE MANUALS
CONTACT:
MAURITRON TECHNICAL SERVICES
www.mauritron.co.uk
TEL: 01844 - 351694
FAX: 01844 - 352554

(X57-3190-00)

Q1,2,26,61,69,87,90	: 2SA1162(Y)
Q3,4,17,34,55,63,65~67,75,77, 83,84,91,92,96,97,99	: DTC114EK
Q5~8,35~39,76	: DTA143EK
Q9~11,13	: 2SC2668(Y)
Q12	: 2SK192A(GR)*J
Q14,71,73	: 2SC1907
Q15,81	: 2SC2053
Q16	: DTA114EK
Q18,19,22,23,70,72	: 2SK125-5
Q20,32,43,44,82,85,88	: FMC3
Q21,79,80	: 3SK122(L)
Q27,30,31,78,86	: 3SK73(GR)
Q29,40~42,45~54,56~59, 74,89,98	: 2SC2712(Y)
Q60,66	: 2SK192A(Y)
Q62,64,93~95	: DTC114TK

IC1	: M54581P
IC2	: M74LS145P
IC3	: AN612
IC4	: μPC2002V
IC5	: SN16913P
IC6	: MC3357P
IC7~10	: TC4066BP
IC11	: LM324N
IC12	: AN7808

D1~3,12	: DAN235K
D5,10	: US1090
D6,9	: V08(G)
D7,8,11,13~22,38,41,44~46, 50~53,99~106,109,110,118, 122,124,126	: RLS135
D23,25,90	: 1S1555
D24,48,57,61,68,69,77, 79~81,85,89,97,107,119	: DAN202K
D26,28,29,31	: DAP202K
D27,33,49,54~56,58~60, 62~67,70,72~74,76,78,83, 88,92,95,108,112~115, 117,120,123,128,129	: RLS73
D30,93	: UZ-3.08
D34~37,39,40,42,43	: 1TT310TE
D47,96	: M1204
D71,82,86,87	: HSM88AS
D91	: MTZ9.1JB
D111	: KB-369
D116,125	: RLZ3.68
D75,98	: 1N60APSPA
D127	: 1SS133
TH1~4	: 112-502-2

(X59-1060-00)

Q1	: 2SC2712(Y)
D1,3	: DAN202K
D2	: DAP202K

(X59-3000-02)

Q1	: 2SC2712(Y)
IC1	: NJM4558M

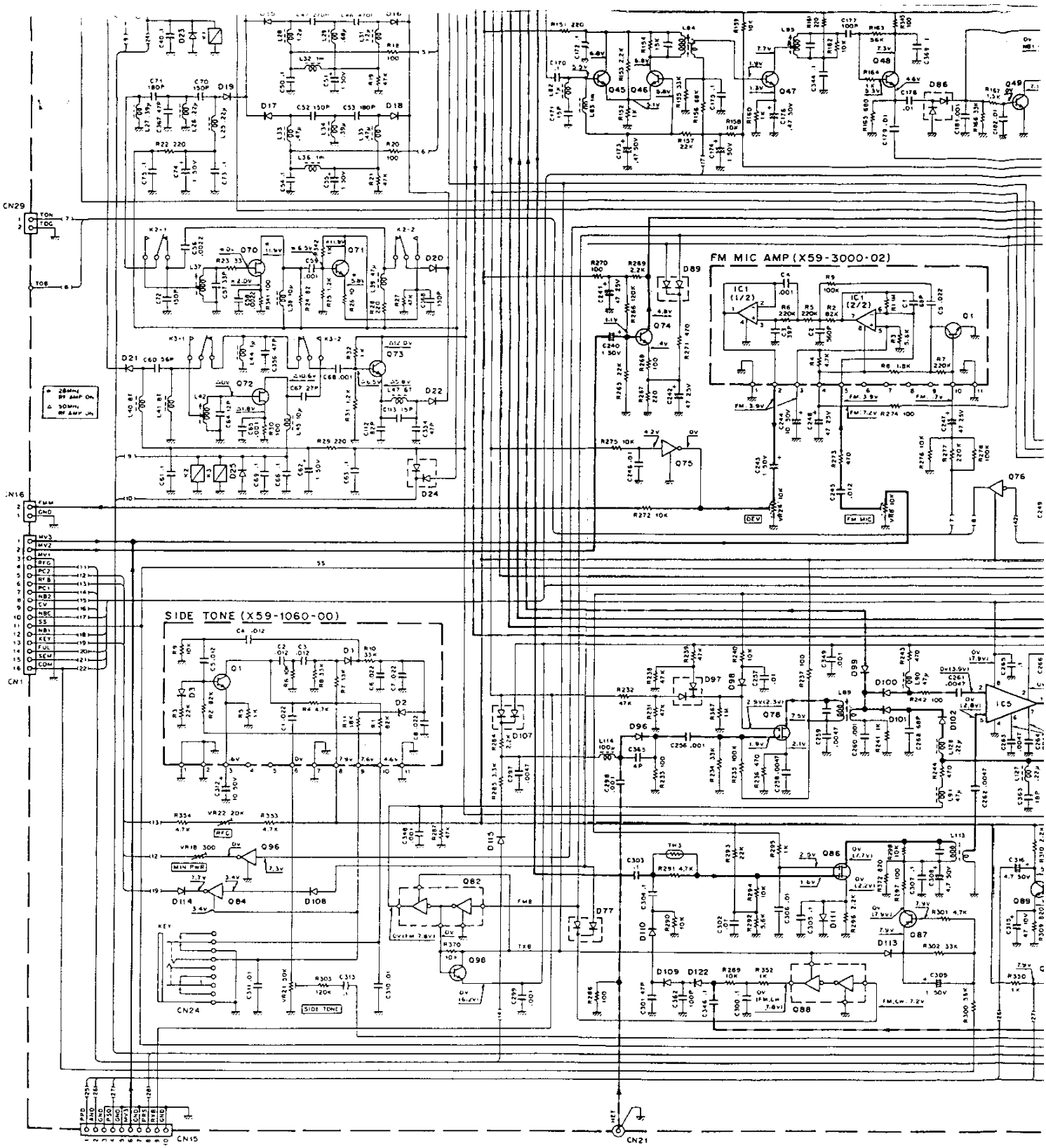

74LS145P

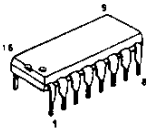

μPC2002V

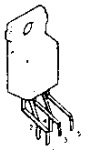

SN16913P

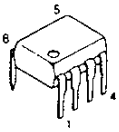

MC3357P

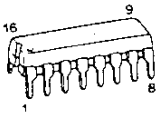

AN7808

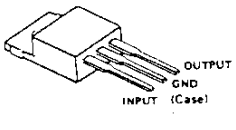

AN612

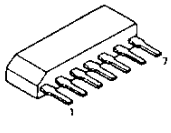

TC4066BP

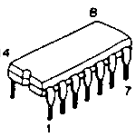

C4011BF

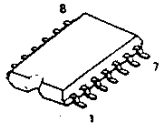

MB74LS122

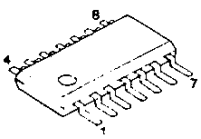

M54581P

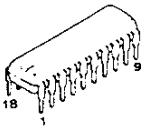

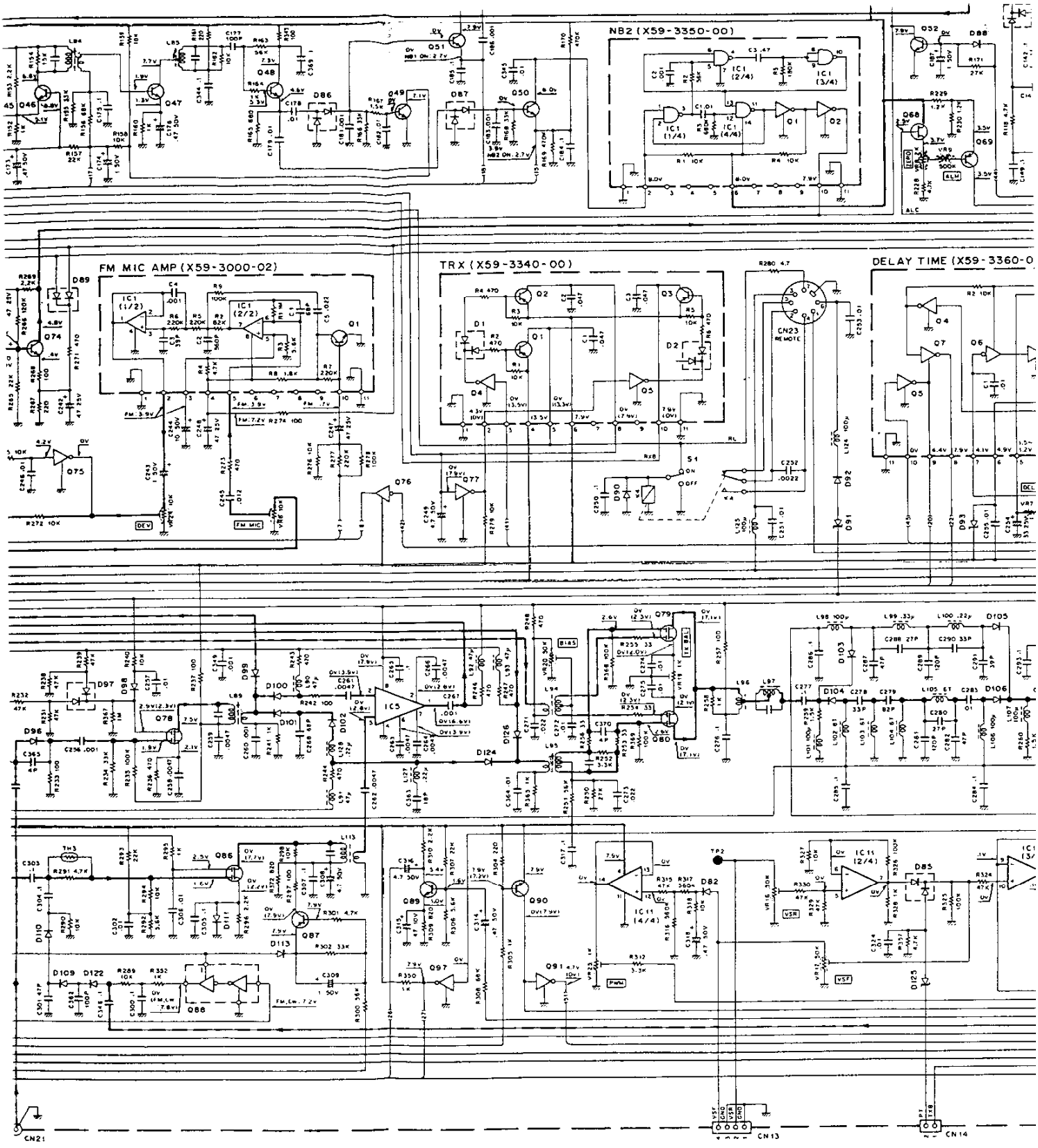

AN7808

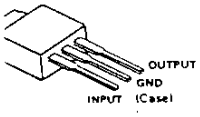

AN612

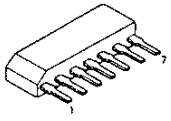

TC4066BP

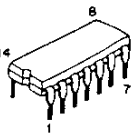

LM324N

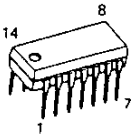

2SA1162(Y)
2SA1182(Y)
2SC2712(Y)
DTA114EK
DTA143EK
DTC114EK
DTC114TK

2SC2053

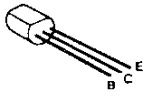

2SC1907

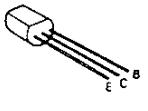

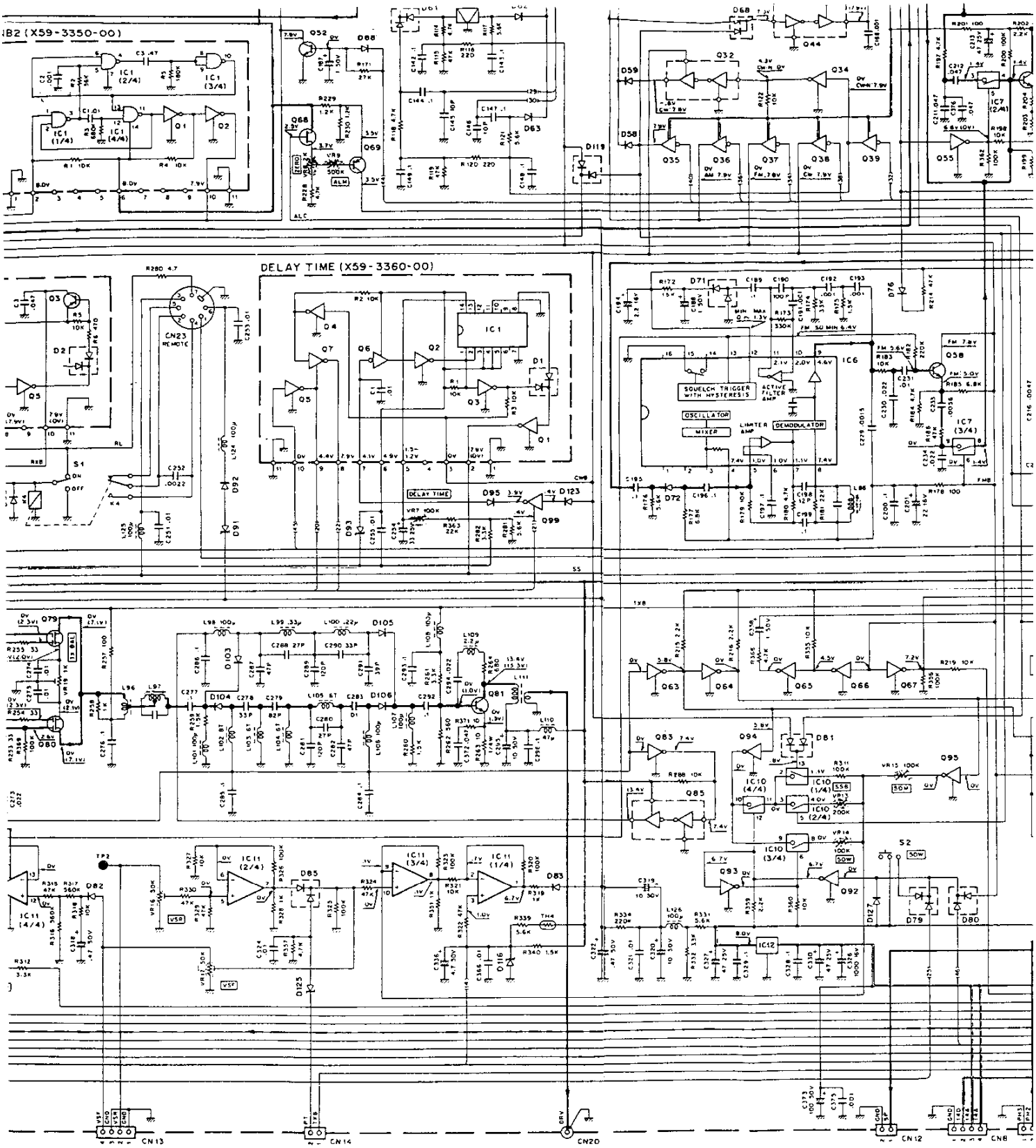

A1162(Y)
A1182(Y)
C2712(Y)
*A114EK
*A143EK
*C114EK
*C114TK

2SC2053

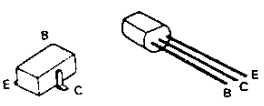

2SC1907

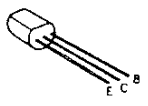

2SK125-5

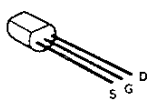

FMC3

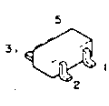

3SK122(L)

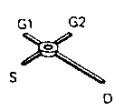

3SK73(GR)

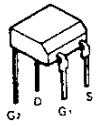

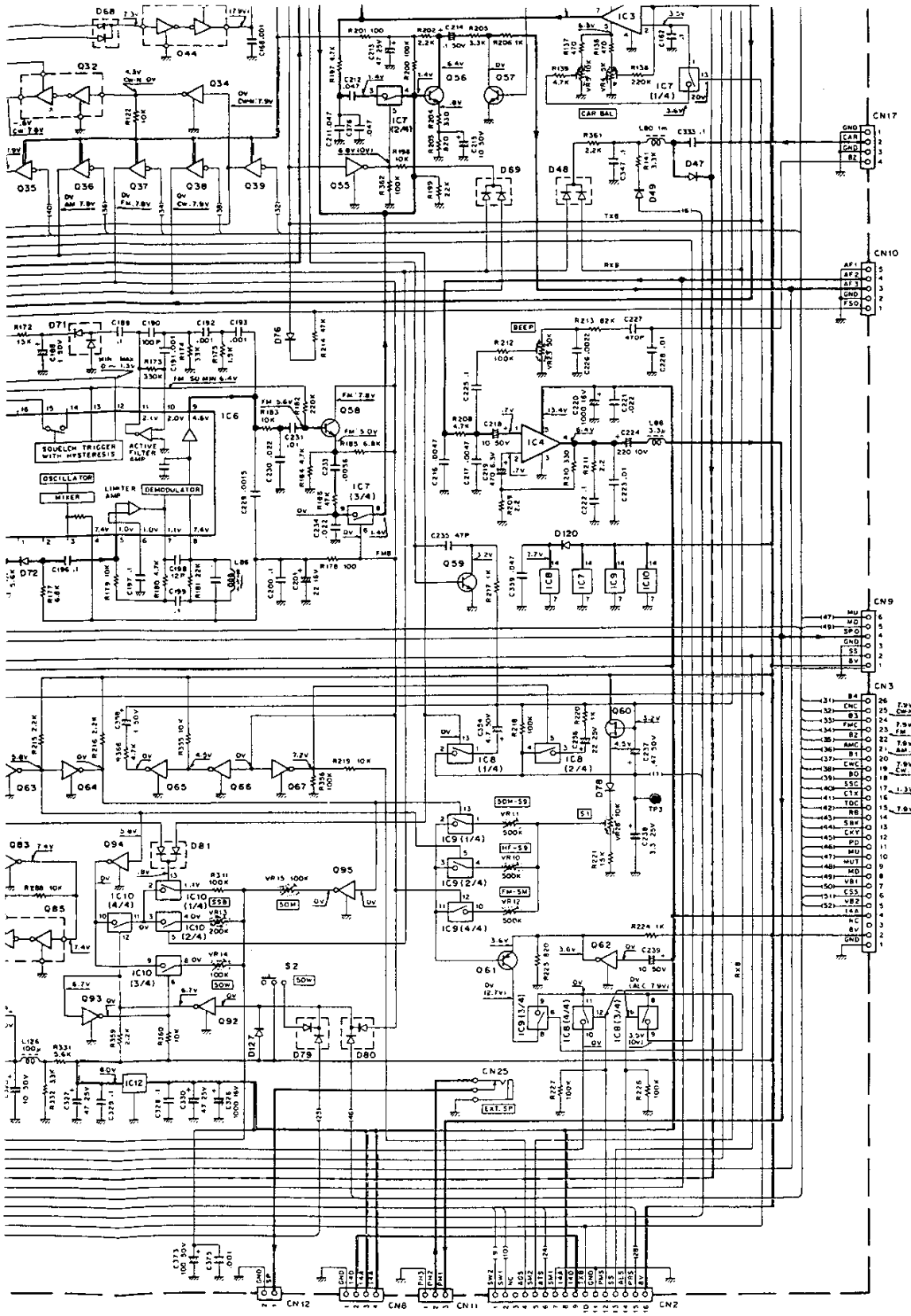

(X57-3190-00)

Q1,2,28,61,69,87,90	: 2SA1162(Y)
Q3,4,17,34,55,63,65~67,75,77, 83,84,91,92,96,97,99	: DTC114EK
Q5~8,35~39,76	: DTA143EK
Q9~11,13	: 2SC2668(Y)
Q12	: 2SK192A(GR)*J
Q14,71,73	: 2SC1907
Q15,81	: 2SC2053
Q16	: DTA114EK
Q18,19,22,23,70,72	: 2SK125-5
Q20,32,43,44,82,85,88	: FMC3
Q21,79,80	: 3SK122(L)
Q27,30,31,78,86	: 3SK73(GR)
Q29,40~42,45~54,56~59, 74,89,98	: 2SC2712(Y)
Q60,68	: 2SK192A(Y)
Q62,64,93~95	: DTC114TK

IC1	: M54581P
IC2	: M74LS145P
IC3	: AN612
IC4	: μPC2002V
IC5	: SN16913P
IC6	: MC3357P
IC7~10	: TC4066BP
IC11	: LM324N
IC12	: AN7808

D1~3,12	: DAN235K
D5,10	: US1090
D6,9	: V08(G)
D7,8,11,13~22,38,41,44~46, 50~53,99~106,109,110,118, 122,124,126	: RLS135
D23,25,90	: 1S1555
D24,48,57,61,68,69,77, 79~81,85,89,97,107,119	: DAN202K
D26,28,29,31	: DAP202K
D27,33,49,54~56,58~60, 62~67,70,72~74,76,78,83, 88,92,95,108,112~115, 117,120,123,128,129	: RLS73
D30,93	: UZ-3.0B
D34~37,39,40,42,43	: ITT310TE
D47,96	: M1204
D71,82,86,87	: HSM88AS
D91	: MTZ9.1JB
D111	: KB-369
D116,125	: RLZ3.6B
D75,98	: 1N60APSPA
D127	: 1SS133
TH1~4	: 112-502-2

(X59-1060-00)

Q1	: 2SC2712(Y)
D1,3	: DAN202K
D2	: DAP202K

(X59-3000-02)

Q1	: 2SC2712(Y)
IC1	: NJM4558M

(X59-3340-00)

Q1,2	: 2SA1204(Y)
Q3	: 2SA1182(Y)
Q4,5	: DTC114EK
D1,2	: DAN202(K)

(X59-3350-00)

Q1,2	: DTC114EK
IC1	: TC4011BF

(X59-3360-00)

Q1~5	: DTC114EK
Q6	: DTA114EK
Q7	: DTC114TK
D1	: DAN202(K)
IC1	: M74LS122

3SK122(L)

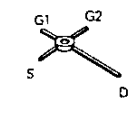

3SK73(GR)

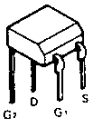

2SC2668(Y)

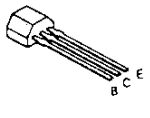

2SK192A(Y)
2SK192A(GR)*J

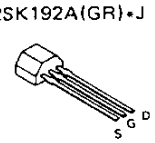

NJM4558M

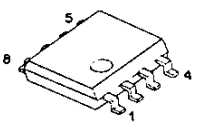

2SA1204(Y)

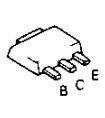

TERMINAL FUNCTION

Connector No.	Terminal No.	Terminal Name	Terminal Function
SWITCH UNIT (X41-3030-XX)			
CN1	1	GND	GND
	2	PPD	Packet power down
	3	RXB	RX power supply (+8V)
	4	PRS	Processor switch
	5	NC	Not connected
	6	MV3	Mic amp. output
CN2	1	SS	Standby switch
	2	8V	+8V
CN3	1	SS	Standby switch
	2	PKS	Packet standby
	3	GND	GND
	4	PDK	Packet data input
CN4 (TS-140S)	1	GND	GND
	2	VOX	VOX
CN5	1	MIC	Mic amp. input
	2	GND	GND
	3	8M	+8V (Mic)
	4	SS	Standby switch
CN6	1	AF1	AF GAIN GND
	2	AF2	AF GAIN volume
	3	AF3	AF GAIN input
	4	GND	GND
	5	FSQ	Squelch volume
	6	NC	Not connected
CN7	1	GND	GND
	2	RIT	RIT data
	3	RIB	RIT volume
	4	IFS	IF shift data
	5	IFB	IF shift volume
CN8	1	PH2	Phone output
	2	PH1	Phone input
	3	PH3	Phone GND
100W FINAL UNIT (X45-3100-XX)			
CN1	1	TXB	TX power supply (+8V)
	2	50B (NC)	50MHz power supply (TS-680S) Not connected (TS-140S)
	3	PT	Temperature protection signal
CN2	1	GND	GND
	2	14D	+14V (DC-DC converter)
	3	14A	+14V
	4	14A	+14V
CN3	1	5A	+5V (PLL)
	2	5B	+5V (Microprocessor)
	3	GND	GND
CN4 (TS-680S)	1	50T	50MHz TX power supply (+8V)
	2	14S	+14V
	3	14S	+14V
CN5	1	MOT +	Fun motor power supply +
	2	MOT –	Fun motor power supply –
		DRV	Drive input
		GND	GND
		PO	Power output
		GND	GND
(TS-680S)		50D	50MHz drive output
		GND	GND
		14S	+14V
		14	+14V
		GND	GND

Connector No.	Terminal No.	Terminal Name	Terminal Function
FILTER UNIT (X51-3040-XX)			
CN1	1	RL	Relay power supply (TX 1
	2	RAT	RX antenna output
	3	GND	GND
CN2 (TS-680S)	1	50T	50MHz TX power supply
	2	14S	+14V
	3	14S	+14V
CN3	1	50F (NC)	50 ~ 54MHz (TS-680S) Not connected (TS-140S)
	2	14F	7.5 ~ 14.5MHz
	3	28F	21.5 ~ 30MHz
	4	7F	4 ~ 7.5MHz
	5	21F	14.5 ~ 21.5MHz
	6	4F	2.5 ~ 4MHz
	7	2F	~ 2.5MHz
CN4	1	VSF	Forward wave voltage
	2	GND	GND
	3	VSR	Reflected wave voltage
	4	GND	GND
CN5		PO	Power input
		GND	GND
CN6 (TS-680S)		50D	50MHz drive input
		GND	GND
		ANT	Tntenna
		GND	GND
CONTROL UNIT (X53-3100-XX)			
CN1	1	CAR	Carrier output (455kHz)
	2	GND	GND
CN2	1	5A	+5V (PLL)
	2	5B	+5V (Microprocessor)
	3	GND	GND
CN3		VCO	VCO input
		GND	GND
CN4	1	GND	GND
	2	VCV	VCO control voltage
	3	8D	+8V (Active low-pass filter)
CN5	1	FMM	FM modulation signal inpu
	2	GND	GND
CN6		HET	Heterodyne output
		GND	GND
CN7	1	BZ	Beep sound output
	2	NC	Not connected
CN8	1	5B	+5V (Interface)
	2	RDY	Ready
	3	CD	Control data
	4	CS	Chip select } IF-1(
	5	RD	Read enable } (Opti
	6	WR	Write enable
	7	GND	GND
CN9	1	RES	Reset
	2	D0	Microprocessor data bus 0 ~ 7 } IF-1((Opti
	3	D1	
	4	D2	
	5	D3	
	6	D4	
	7	D5	
	8	D6	
	9	D7	

TERMINAL FUNCTION

Terminal Function
3030-XX)
ower down
r supply (+8V)
switch
ected
output
switch
switch
andby
ata input
input
switch
N GND
N volume
N input
volume
ected
me
data
volume
tput
put
ND
-3100-XX)
r supply (+8V)
ower supply (TS-680S)
ected (TS-140S)
ture protection signal
C-DC converter)
L)
croprocessor)
X power supply (+8V)
or power supply +
or power supply –
ut
tput
rive output

Connector No.	Terminal No.	Terminal Name	Terminal Function
FILTER UNIT (X51-3040-XX)			
CN1	1	RL	Relay power supply (TX 13V)
	2	RAT	RX antenna output
	3	GND	GND
CN2 (TS-680S)	1	50T	50MHz TX power supply
	2	14S	+14V
	3	14S	+14V
CN3	1	50F (NC)	50 ~ 54MHz (TS-680S) / Not connected (TS-140S)
	2	14F	7.5 ~ 14.5MHz (Filter band data)
	3	28F	21.5 ~ 30MHz (Filter band data)
	4	7F	4 ~ 7.5MHz (Filter band data)
	5	21F	14.5 ~ 21.5MHz (Filter band data)
	6	4F	2.5 ~ 4MHz (Filter band data)
	7	2F	~ 2.5MHz (Filter band data)
CN4	1	VSF	Forward wave voltage
	2	GND	GND
	3	VSR	Reflected wave voltage
	4	GND	GND
CN5		PO	Power input
		GND	GND
CN6 (TS-680S)		50D	50MHz drive input
		GND	GND
		ANT	Tntenna
		GND	GND
CONTROL UNIT (X53-3100-XX)			
CN1	1	CAR	Carrier output (455kHz)
	2	GND	GND
CN2	1	5A	+5V (PLL)
	2	5B	+5V (Microprocessor)
	3	GND	GND
CN3		VCO	VCO input
		GND	GND
CN4	1	GND	GND
	2	VCV	VCO control voltage
	3	8D	+8V (Active low-pass filter)
CN5	1	FMM	FM modulation signal input
	2	GND	GND
CN6		HET	Heterodyne output
		GND	GND
CN7	1	BZ	Beep sound output
	2	NC	Not connected
CN8	1	5B	+5V (Interface) (IF-10C (Option))
	2	RDY	Ready (IF-10C (Option))
	3	CD	Control data (IF-10C (Option))
	4	CS	Chip select (IF-10C (Option))
	5	RD	Read enable (IF-10C (Option))
	6	WR	Write enable (IF-10C (Option))
	7	GND	GND (IF-10C (Option))
CN9	1	RES	Reset (IF-10C (Option))
	2	D0	Microprocessor data bus 0 ~ 7 (IF-10C (Option))
	3	D1	Microprocessor data bus 0 ~ 7 (IF-10C (Option))
	4	D2	Microprocessor data bus 0 ~ 7 (IF-10C (Option))
	5	D3	Microprocessor data bus 0 ~ 7 (IF-10C (Option))
	6	D4	Microprocessor data bus 0 ~ 7 (IF-10C (Option))
	7	D5	Microprocessor data bus 0 ~ 7 (IF-10C (Option))
	8	D6	Microprocessor data bus 0 ~ 7 (IF-10C (Option))
	9	D7	Microprocessor data bus 0 ~ 7 (IF-10C (Option))

Connector No.	Terminal No.	Terminal Name	Termir
CN10	1	B4	Band data
	2	CNC	CW narrow mod
	3	B3	Band data
	4	FMC	FM mode data
	5	B2	Band data
	6	AMC	AM mode data
	7	B1	Band data
	8	CWC	CW mode data
	9	B0	Band data
	10	SSC	SSB mode data
	11	CTX	Transmit timing
	12	TOC	Sub-tone contr
	13	RB	Receive timing
	14	SBK	Blanking signal
	15	CKY	Keying control
	16	PD	Power down sig
	17	MU	Mic up data
	18	MUT	Mute signal
	19	MD	Mic down data
	20	VB1	VCO switching
	21	CSS	Standby contro
	22	VB2	VCO switching
	23	14A	+14V
	24	NC	Not connected
	25	8V	+8V
	26	GND	GND
CN11	1	CK4	Sub-encoder pu
	2	CK3	Sub-encoder pul
	3	5C	+5V (Display)
	4	L1	LED (1MHz)
	5	K0	Key scan input
	6	LF	LED (F.LOCK)
	7	K1	Key scan input
	8	LM	LED (M.SCR)
	9	K2	Key scan input
	10	XP	Display functior
	11	K3	Key scan input
	12	SLH	Display serial da
	13	S0	Key scan output
	14	SDA	Display serial da
	15	S1	Key scan output
	16	SCK	Display serial clo
	17	S2	Key scan output
	18	S3	Key scan output
CN12	1	GND	GND
	2	CK2	Main encoder pu
	3	CK1	Main encoder pu
	4	5B	+5V (Main enco
CN13	1	IFB	If shift volume
	2	RIB	RIT volume
	3	RIT	RIT data
	4	IFS	IF shift data
	5	GND	GND
CN14	1	HFL	HF low (Ar
	2	HFH	HF high (Ar
	3	50M	50MHz (Ar
		CAL	

TS-140S/680S

TERMINAL FUNCTION

Connector No.	Terminal No.	Terminal Name	Terminal Function
CN10	1	B4	Band data
	2	CNC	CW narrow mode data
	3	B3	Band data
	4	FMC	FM mode data
	5	B2	Band data
	6	AMC	AM mode data
	7	B1	Band data
	8	CWC	CW mode data
	9	B0	Band data
	10	SSC	SSB mode data
	11	CTX	Transmit timing control signal
	12	TOC	Sub-tone control signal
	13	RB	Receive timing control signal
	14	SBK	Blanking signal
	15	CKY	Keying control signal
	16	PD	Power down signal
	17	MU	Mic up data
	18	MUT	Mute signal
	19	MD	Mic down data
	20	VB1	VCO switching signal
	21	CSS	Standby control data
	22	VB2	VCO switching signal
	23	14A	+14V
	24	NC	Not connected
	25	8V	+8V
	26	GND	GND
CN11	1	CK4	Sub-encoder pulse input
	2	CK3	Sub-encoder pulse input
	3	5C	+5V (Display)
	4	L1	LED (1MHz)
	5	K0	Key scan input
	6	LF	LED (F.LOCK)
	7	K1	Key scan input
	8	LM	LED (M.SCR)
	9	K2	Key scan input
	10	XP	Display function signal
	11	K3	Key scan input
	12	SLH	Display serial data (Latch signal)
	13	S0	Key scan output
	14	SDA	Display serial data
	15	S1	Key scan output
	16	SCK	Display serial clock
	17	S2	Key scan output
	18	S3	Key scan output
CN12	1	GND	GND
	2	CK2	Main encoder pulse input
	3	CK1	Main encoder pulse input
	4	5B	+5V (Main encoder)
CN13	1	IFB	If shift volume
	2	RIB	RIT volume
	3	RIT	RIT data
	4	IFS	IF shift data
	5	GND	GND
CN14	1	HFL	HF low } Antenna select signal
	2	HFH	HF high
	3	50M	50MHz
		CAL	

FOR SERVICE MANUALS
CONTACT:
MAURITRON TECHNICAL SERVICES
www.mauritron.co.uk
TEL: 01844 - 351694
FAX: 01844 - 352554

Connector No.	Terminal No.	Terminal Name	Terminal Function
DISPLAY UNIT (X54-3050-XX)			
CN1	1	SM1	S meter –
	2	SM2	S meter +
CN2	1	8V	+8V
	2	PRS	Processor switch
	3	ALS	ALC meter switch
	4	SS	Standby switch
	5	PMS	Power meter switch
	6	GND	GND
	7	TXB	TX power supply (+8V)
	8	14D	+14V (DC-DC converter)
	9	14A	+14V
	10	SM1	S meter –
	11	ATS	RF ATT switch
	12	SM2	S meter +
	13	AGS	AGC switch
	14	NC	Not connected
	15	SW1	RF amplifier signal (TS-680S)
	16	SW2	VOX signal (TS-140S)
CN3	1	COM	Break in input
	2	SEM	Semi-break in signal
	3	FUL	Full break in signal
	4	KEY	Key signal
	5	NB1	Noise blanker 1 switch
	6	SS	Standby signal
	7	NBC	NB time constant
	8	CV	Carrier volume
	9	NB2	Noise blanker 2 switch
	10	PC1	Power control volume
	11	RFB	RF GAIN input
	12	PC2	Power control volume
	13	RFG	RF GAIN volume output
	14	MV1	Mic volume GND
	15	MV2	Mic volume output
	16	MV3	Mic volume input
CN4	1	S3	Key scan input
	2	S2	Key scan input
	3	SCK	Display serial clock
	4	S1	Key scan input
	5	SDA	Display serial data
	6	S0	Key scan input
	7	SLH	Display serial data (Latch signal)
	8	K3	Key scan output
	9	XP	Display function signal
	10	K2	Key scan output
	11	LM	LED (M.SCR)
	12	K1	Key scan output
	13	LF	LED (F.LOCK)
	14	K0	Key scan output
	15	L1	LED (1MHz)
	16	5C	+5V (Display)
	17	CK3	Sub-encoder pulse output
	18	CK4	Sub-encoder pulse output
CN5	1	SPO	Speaker output
	2	8M	+8V
	3	GND	GND
	4	MU	Mic up data
	5	MD	Mic down data
	6	SS	Standby switch
	7	MIC	Microphone
	8	GND	GND (Mic)

TS-140S/680S

TERMINAL FUNCTION

Connector No.	Terminal No.	Terminal Name	Terminal Function
SIGNAL UNIT (X57-3190-00) : TS-680S SIGNAL UNIT (X57-3200-XX) : TS-140S			
CN1	1	MV3	Mic volume output
	2	MV2	Mic volume input
	3	MV1	Mic volume GND
	4	RFG	RF GAIN volume input
	5	PC2	Power control volume
	6	RFB	RF GAIN output
	7	PC1	Power control volume
	8	NB2	Noise blanker 2 switch
	9	CV	Carrier volume
	10	NBC	NB time constant
	11	SS	Standby switch
	12	NB1	Noise blanker 1 switch
	13	KEY	Key signal
	14	FUL	Full break in signal
	15	SEM	Semi-break in signal
	16	COM	Full break in output
CN2	1	SW2	RF amplifier signal (TS-680S)
	2	SW1	VOX signal (TS-140S)
	3	NC	Not connected
	4	AGS	AGC switch
	5	SM2	S meter +
	6	ATS	RF ATT switch
	7	SM1	S meter –
	8	14A	+14V
	9	14D	+14V (DC-DC converter)
	10	TXB	TX power supply (+8V)
	11	GND	GND
	12	PMS	Power meter switch
	13	SS	Standby switch
	14	ALS	ALC meter switch
	15	PRS	Processor switch
	16	8V	+8V
CN3	1	GND	GND
	2	8V	+8V
	3	NC	Not connected
	4	14A	+14V
	5	VB2	VCO switching signal
	6	CSS	Standby control data
	7	VB1	VCO switching signal
	8	MD	Mic down data
	9	MUT	Mute signal
	10	MU	Mic up data
	11	PD	Power down signal
	12	CKY	Keying control signal
	13	SBK	Blanking signal
	14	RB	Receive timing control signal
	15	TOC	Sub-tone control signal
	16	CTX	Transmit timing control signal
	17	SSC	SSB mode data
	18	B0	Band data
	19	CWC	CW mode data
	20	B1	Band data
	21	AMC	AM mode data
	22	B2	Band data
	23	FMC	FM mode data
	24	B3	Band data
	25	CNC	CW narrow mode data
	26	B4	Band data
CN4	1	RAT	RX antenna input
	2	GND	GND
	3	RL	Relay power supply (TX 13V)

Connector No.	Terminal No.	Terminal Name	Terminal Function
CN5	1	50F (NC)	50 ~ 54MHz (TS-680S) Not connected (TS-140S)
	2	28F	21.5 ~ 30MHz
	3	21F	14.5 ~ 21.5MHz
	4	14F	7.5 ~ 14.5MHz
	5	7F	4 ~ 7.5MHz
	6	4F	2.5 ~ 4MHz
	7	2F	~ 2.5MHz
CN6	1	8D	+8V (Active low-pass filter)
	2	VCV	VCO control voltage
	3	GND	GND
CN7 (TS-680S)	1	NC	Not connected
	2	50B	50MHz power supply
CN8	1	GND	GND
	2	14D	+14V (DC-DC converter)
	3	14A	+14V (DC-DC converter)
	4	14A	+14V (DC-DC converter)
CN9	1	8V	+8V
	2	SS	Standby switch
	3	GND	GND
	4	SPO	Speaker output
	5	MD	Mic down data
	6	MU	Mic up data
CN10	1	FSQ	Squelch volume
	2	GND	GND
	3	AF3	AF GAIN output
	4	AF2	AF GAIN volume
	5	AF1	AF GAIN GND
CN11	1	PH3	Phone GND
	2	PH2	Phone input
	3	PH1	Phone output
CN12	1	SP	Speaker output
	2	GND	GND
CN13	1	GND	GND
	2	VSR	Reflected wave voltage
	3	GND	GND
	4	VSF	Forward wave voltage
CN14	1	TXB	TX power aupply (+8V)
	2	PT	Temperature protection signal
CN15	1	PPD	Packet power down
	2	ANO	RX audio output
	3	GND	GND
	4	PSQ	Packet squelch
	5	GND	GND
	6	MV3	Mic amp. output
	7	GND	GND
	8	PRS	Processor switch
	9	RXB	RX power supply (+8V)
	10	GND	GND
CN16	1	FMM	FM modulation signal
	2	GND	GND
CN17	1	GND	GND
	2	CAR	Carrier input (455kHz)
	3	GND	GND
	4	BZ	Beep sound input
CN18	1	CF1	Option filter output
	2	GND	GND
CN19	1	CF2	Option filter inpug
	2	GND	GND
CN20		DRV	Drive output
		GND	GND

TERMINAL FUNCTION

erminal Function
) : TS-680S
X) : TS-140S
ıe output
ıe input
ıe GND
volume input
ıtrol volume
output
ıtrol volume
ıker 2 switch
lume
onstant
witch
ıker 1 switch
in signal
k in signal
in output
ifier signal (TS-680S)
ıal (TS-140S)
cted
ch
witch
-DC converter)
supply (+8V)
er switch
vitch
switch
witch
cted
hing signal
ntrol data
hing signal
data
a
n signal
ıtrol signal
gnal
ıing control signal
ntrol signal
ming control signal
data
ata
ata
ata
mode data
input
r supply (TX 13V)

Connector No.	Terminal No.	Terminal Name	Terminal Function
CN5	1	50F (NC)	50 ~ 54MHz (TS-680S) Not connected (TS-140S)
	2	28F	21.5 ~ 30MHz
	3	21F	14.5 ~ 21.5MHz
	4	14F	7.5 ~ 14.5MHz
	5	7F	4 ~ 7.5MHz
	6	4F	2.5 ~ 4MHz
	7	2F	~ 2.5MHz
CN6	1	8D	+8V (Active low-pass filter)
	2	VCV	VCO control voltage
	3	GND	GND
CN7 (TS-680S)	1	NC	Not connected
	2	50S	50MHz power supply
CN8	1	GND	GND
	2	14D	+14V (DC-DC converter)
	3	14A	+14V (DC-DC converter)
	4	14A	+14V (DC-DC converter)
CN9	1	8V	+8V
	2	SS	Standby switch
	3	GND	GND
	4	SPO	Speaker output
	5	MD	Mic down data
	6	MU	Mic up data
CN10	1	FSQ	Squelch volume
	2	GND	GND
	3	AF3	AF GAIN output
	4	AF2	AF GAIN volume
	5	AF1	AF GAIN GND
CN11	1	PH3	Phone GND
	2	PH2	Phone input
	3	PH1	Phone output
CN12	1	SP	Speaker output
	2	GND	GND
CN13	1	GND	GND
	2	VSR	Reflected wave voltage
	3	GND	GND
	4	VSF	Forward wave voltage
CN14	1	TXB	TX power aupply (+8V)
	2	PT	Temperature protection signal
CN15	1	PPD	Packet power down
	2	ANO	RX audio output
	3	GND	GND
	4	PSQ	Packet squelch
	5	GND	GND
	6	MV3	Mic amp. output
	7	GND	GND
	8	PRS	Processor switch
	9	RXB	RX power supply (+8V)
	10	GND	GND
CN16	1	FMM	FM modulation signal
	2	GND	GND
CN17	1	GND	GND
	2	CAR	Carrier input (455kHz)
	3	GND	GND
	4	BZ	Beep sound input
CN18	1	CF1	Option filter output
	2	GND	GND
CN19	1	CF2	Option filter inpug
	2	GND	GND
CN20		DRV	Drive output
		GND	GND

Connector No.	Terminal No.	Terminal Name	Terminal
CN21		HET	Heterodyne input
		GND	GND
CN22		VCO	VCO output
		GND	GND
CN501 (TS-140S)	1	GND	GND
	2	VOX	VOX
CN27	1	GND	GND
	2	PKD	Packet data
	3	SS	Standby switch
	4	PKS	Packet standby
	5	PSQ	Packet squelch
	6	ANO	RX audio output
	7	GND	GND
	8	GND	GND
CN28	1	NC	Not connected
	2	NC	Not connected
	3	ANO	RX audio output
	4	GND	GND
	5	PSQ	Packet squelch
	6	NC	Not connected
	7	NC	Not connected
	8	GND	GND
	9	PKS	Packet standby
	10	NC	Not connected
	11	PKD	Packet power dow
	12	GND	GND
	13	SS	Standby switch
CN29	1	TON	Sub-tone input
	2	TOG	Sub-tone GND
		TOB	Sub-tone power su
		CAL	

TERMINAL FUNCTION

Connector No.	Terminal No.	Terminal Name	Terminal Function
CN21		HET	Heterodyne input (39.6MHz)
		GND	GND
CN22		VCO	VCO output
		GND	GND
CN501 (TS-140S)	1	GND	GND
	2	VOX	VOX
CN27	1	GND	GND
	2	PKD	Packet data
	3	SS	Standby switch
	4	PKS	Packet standby
	5	PSQ	Packet squelch
	6	ANO	RX audio output
	7	GND	GND
	8	GND	GND
CN28	1	NC	Not connected
	2	NC	Not connected
	3	ANO	RX audio output
	4	GND	GND
	5	PSQ	Packet squelch
	6	NC	Not connected
	7	NC	Not connected
	8	GND	GND
	9	PKS	Packet standby
	10	NC	Not connected
	11	PKD	Packet power down
	12	GND	GND
	13	SS	Standby switch
CN29	1	TON	Sub-tone input
	2	TOG	Sub-tone GND
		TOB	Sub-tone power supply (+8V)
		CAL	

SIDE TONE (X59-1060-00)

Component side view

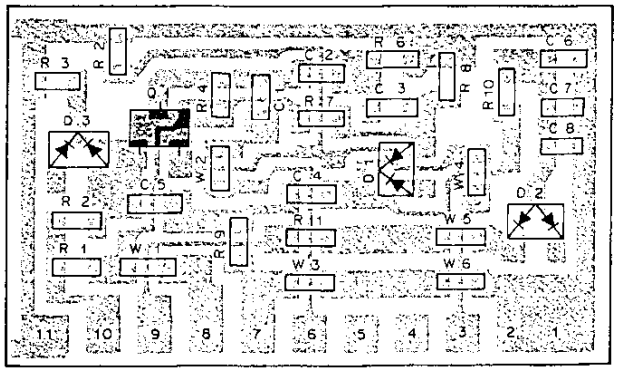

TRX (X59-3340-00)

Component side view

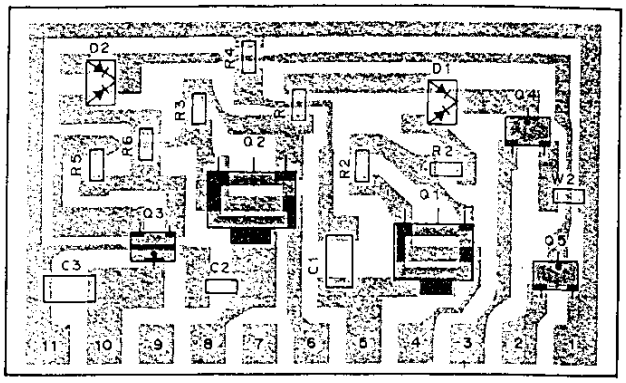

VOX (X59-1080-00)

Component side view

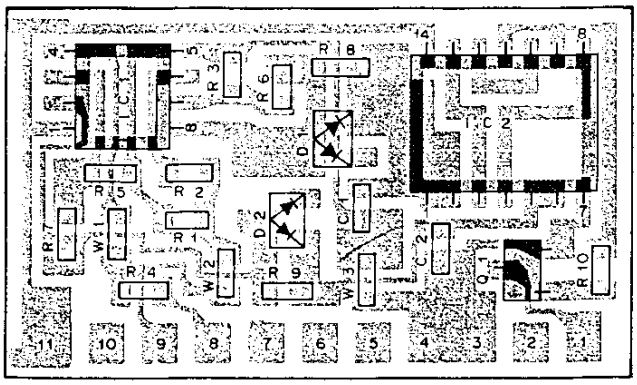

NB2 (X59-3350-00)

Component side view

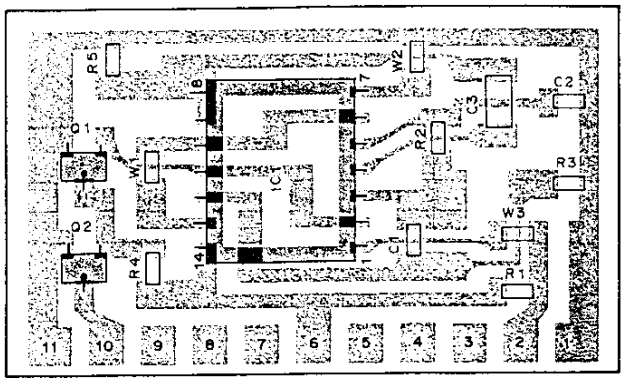

FM MIC AMP. (X59-3000-02)

Component side view

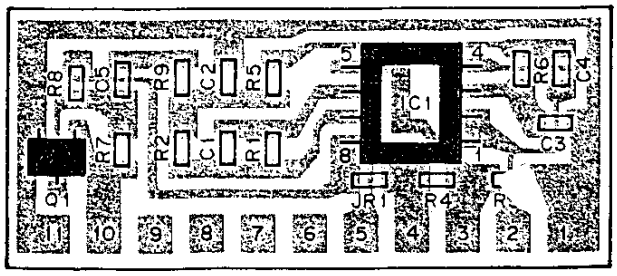

DELAY TIME (X59-3360-00)

Component side view

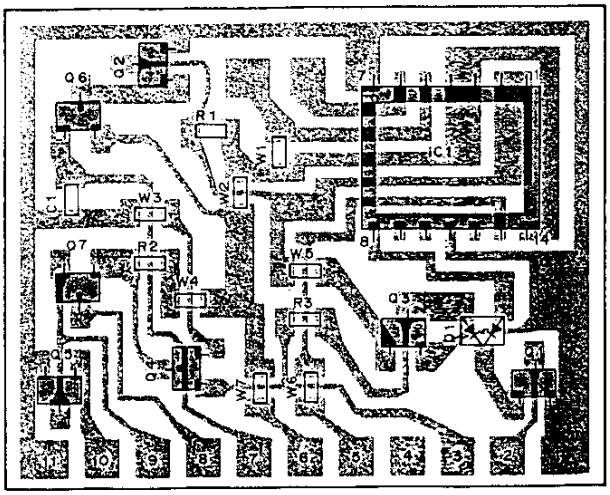

FOR SERVICE MANUALS
CONTACT:
MAURITRON TECHNICAL SERVICES
www.mauritron.co.uk
TEL: 01844 - 351694
FAX: 01844 - 352554

ARD VIEWS (TS-140S)

TRX (X59-3340-00)

Component side view

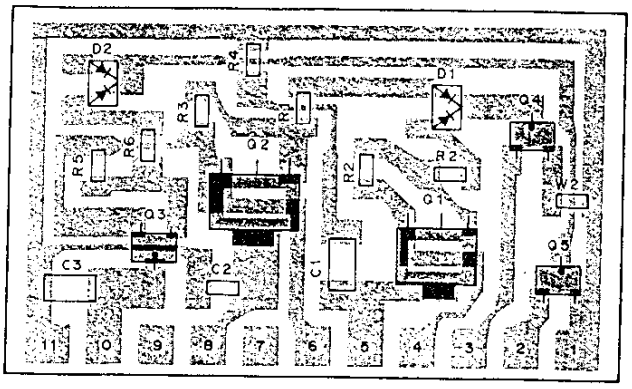

NB2 (X59-3350-00)

Component side view

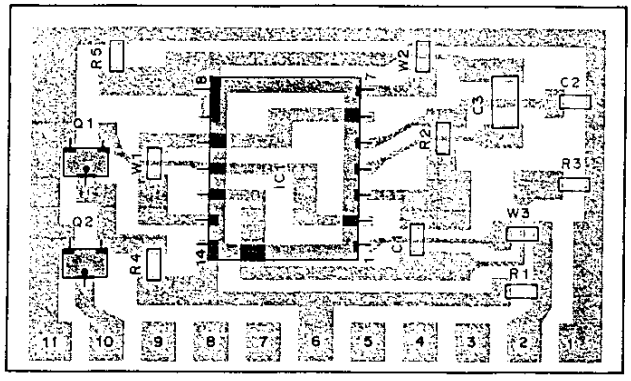

DELAY TIME (X59-3360-00)

Component side view

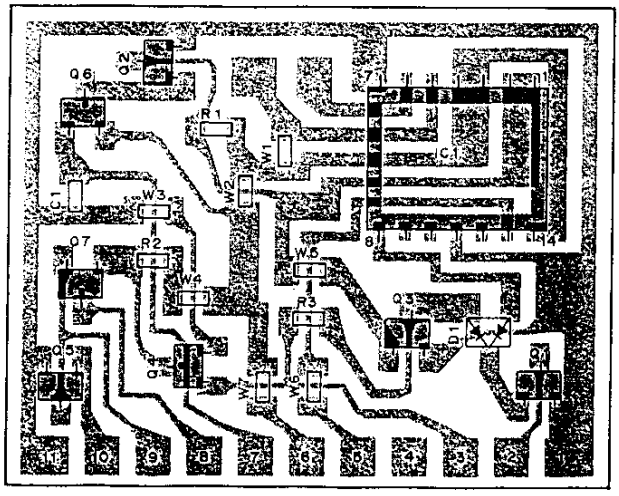

SIGNAL UNIT (X57-3200-XX) -10 : K, M, T -61 : W

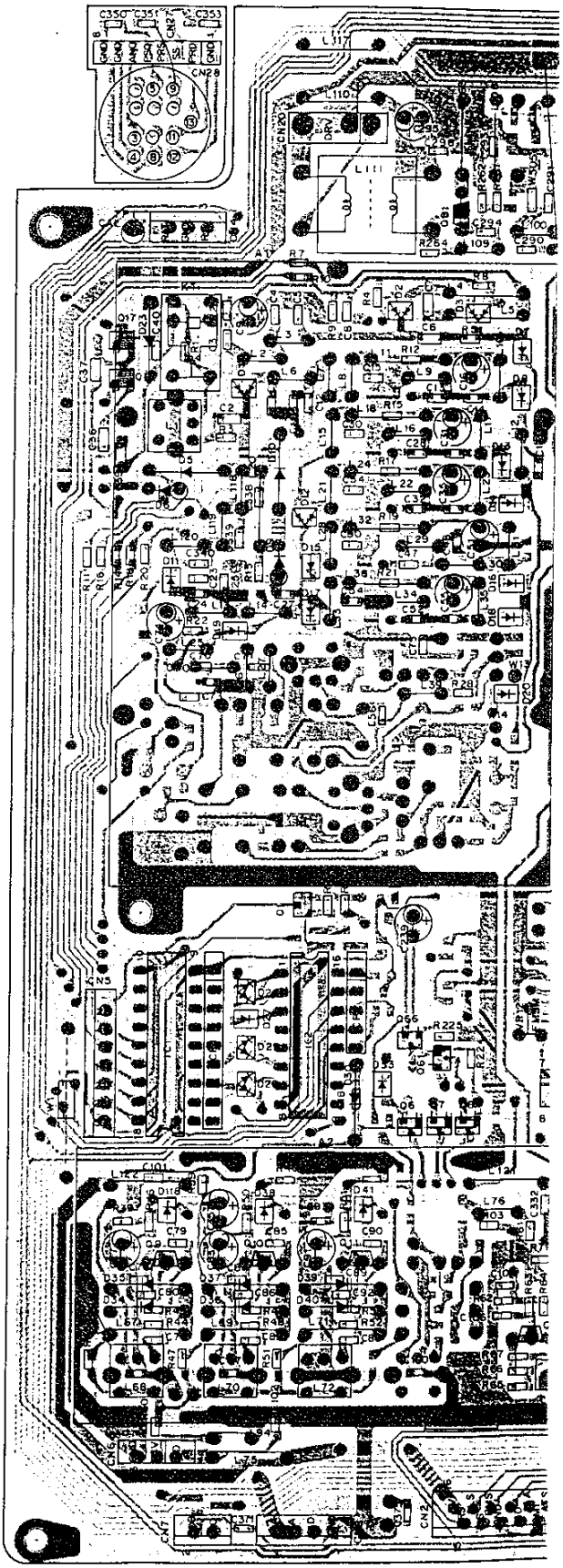

SIGNAL UNIT (X57-3200-XX) -10 : K, M, T -61 : W Component side view

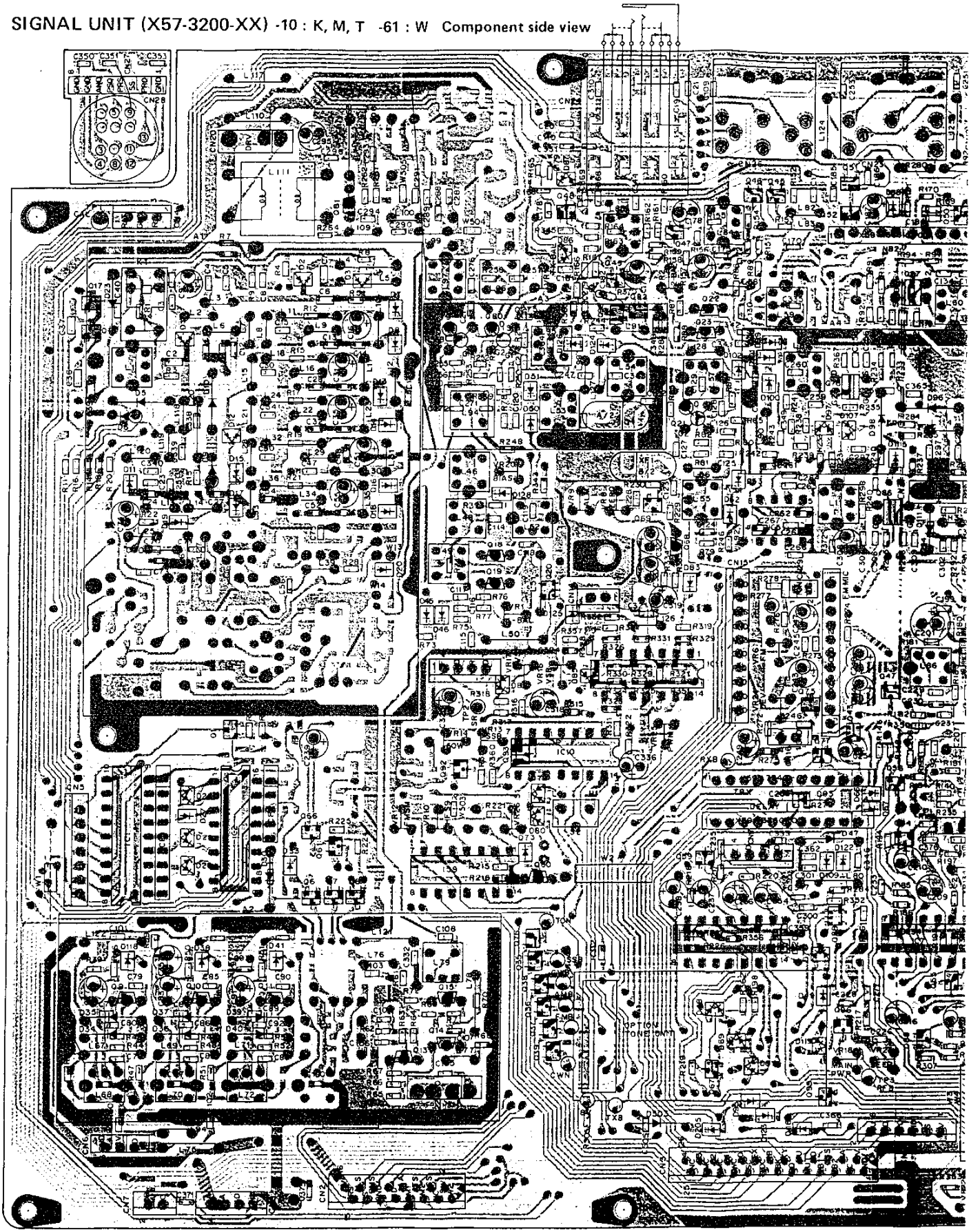

FOR SERVICE MANUALS
CONTACT:
MAURITRON TECHNICAL SERVICES
www.mauritron.co.uk
TEL: 01844 - 351694
FAX: 01844 - 352554

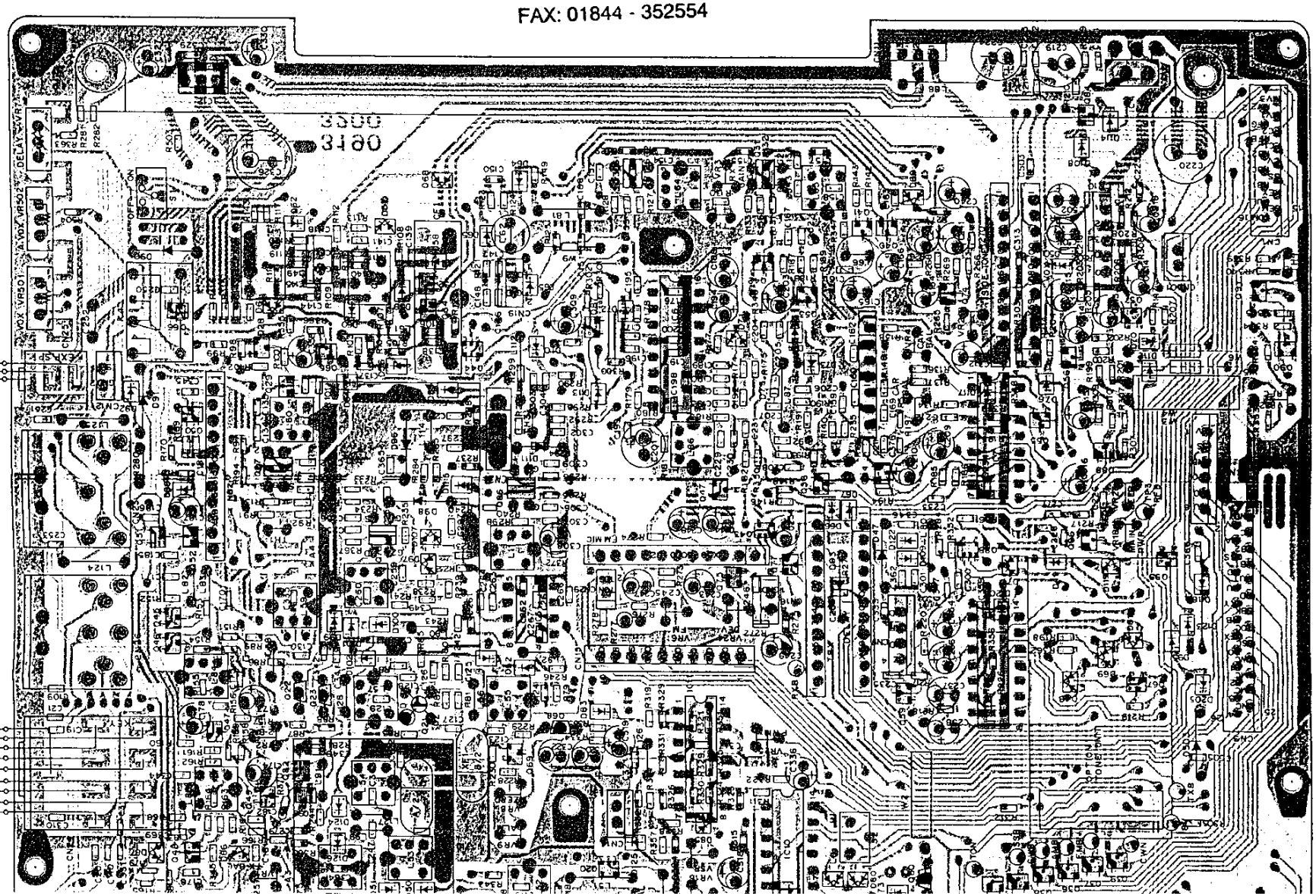

SIGNAL UNIT (X57-3200-XX) -10 : K, M, T -61 : W Foil side view

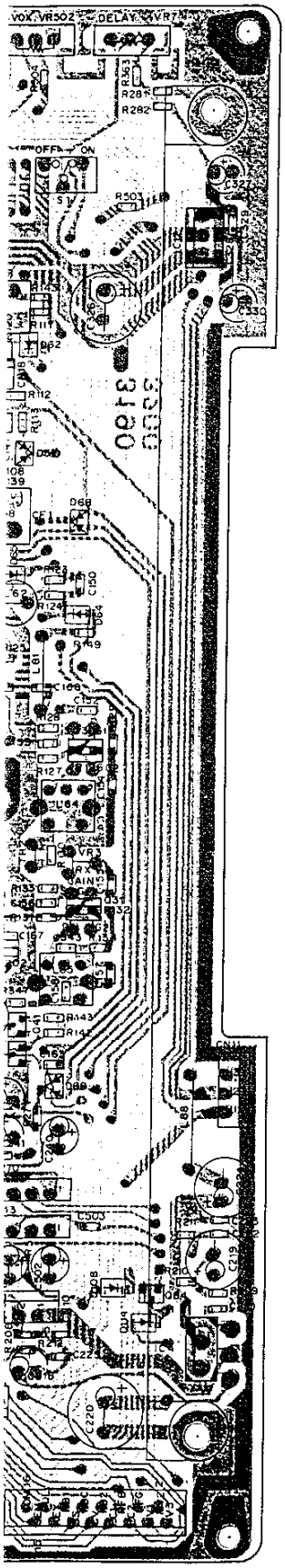

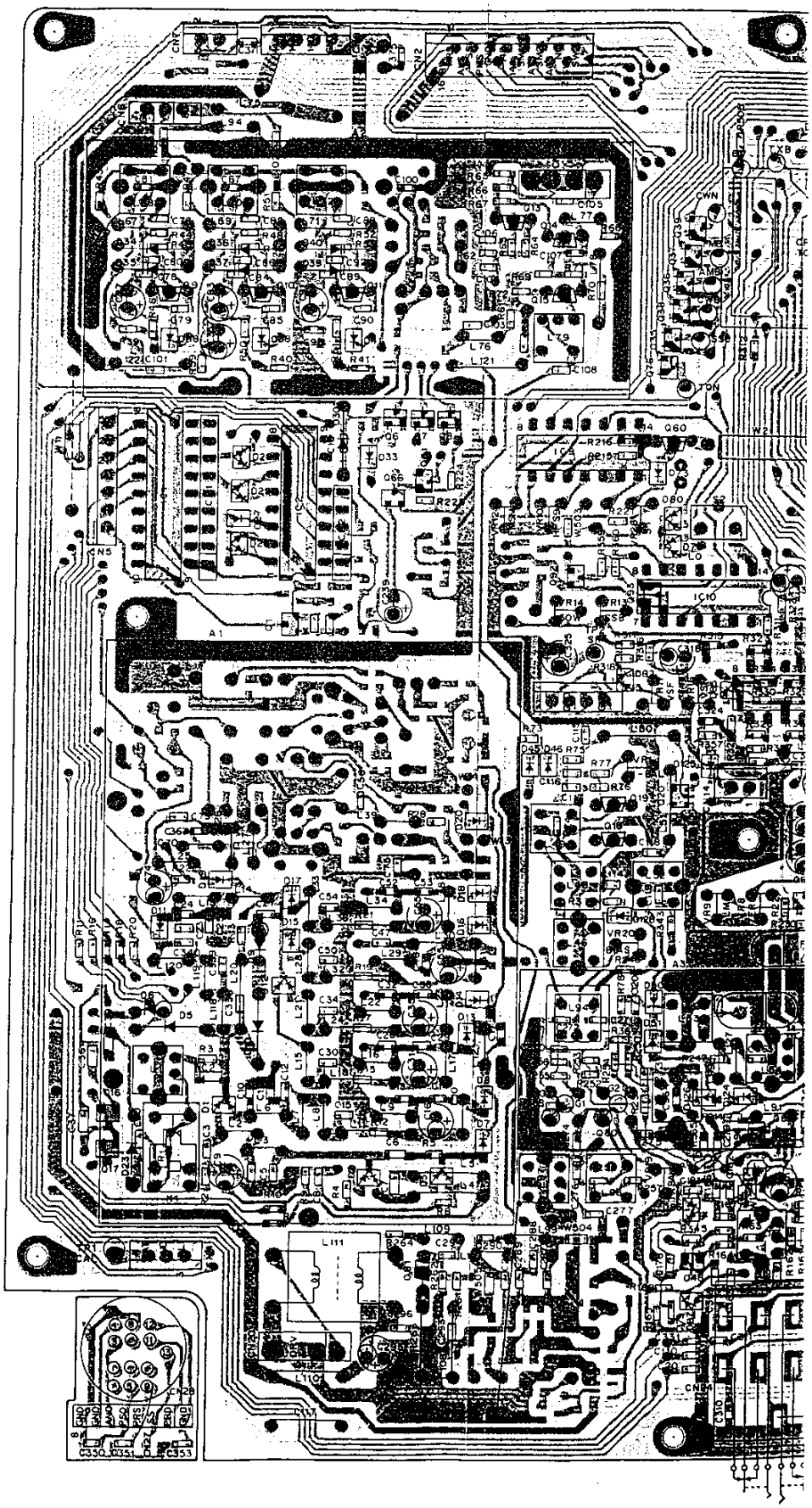

M, T -61 : W Foil side view

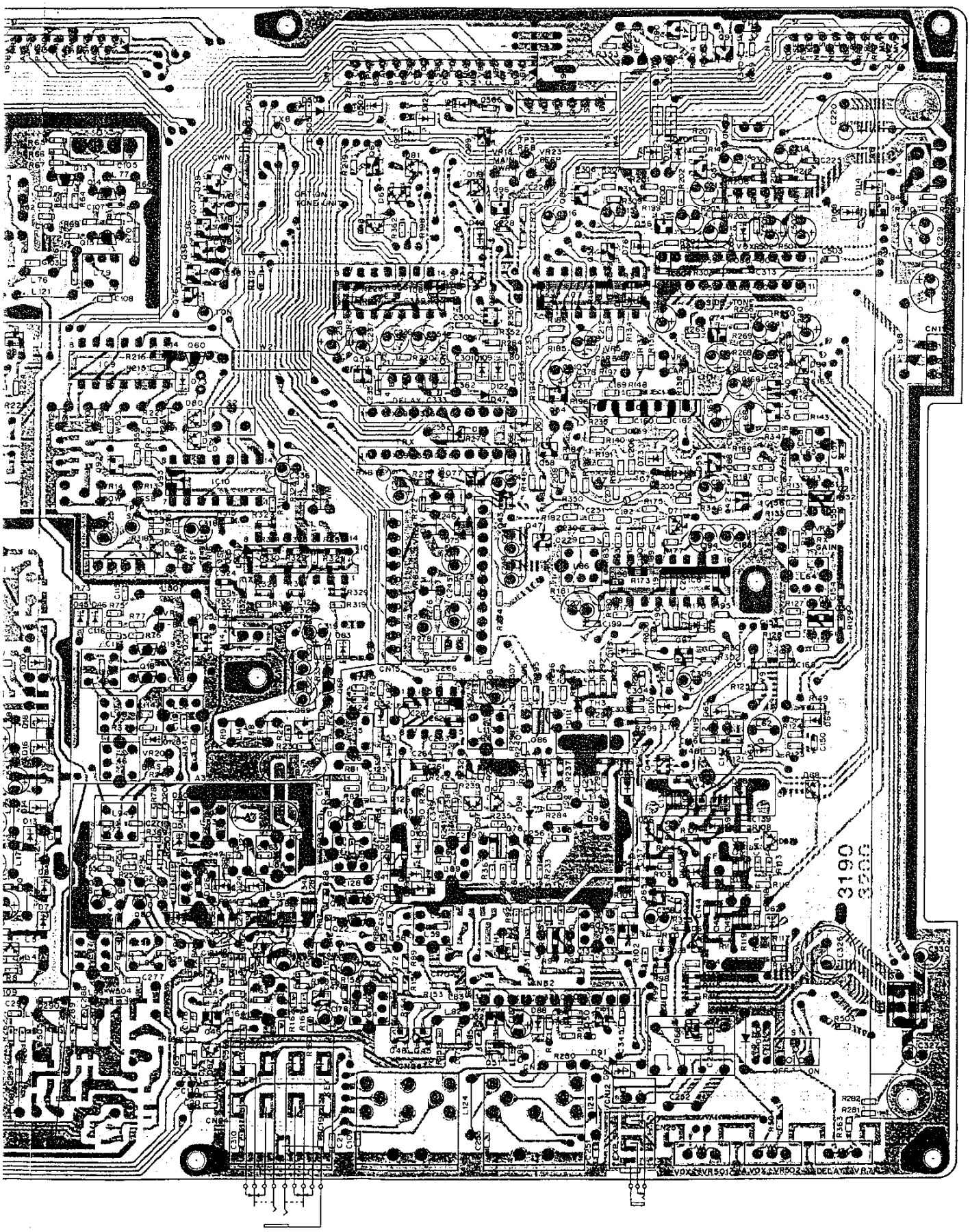

SIGNAL UNIT (X57-3200-XX)

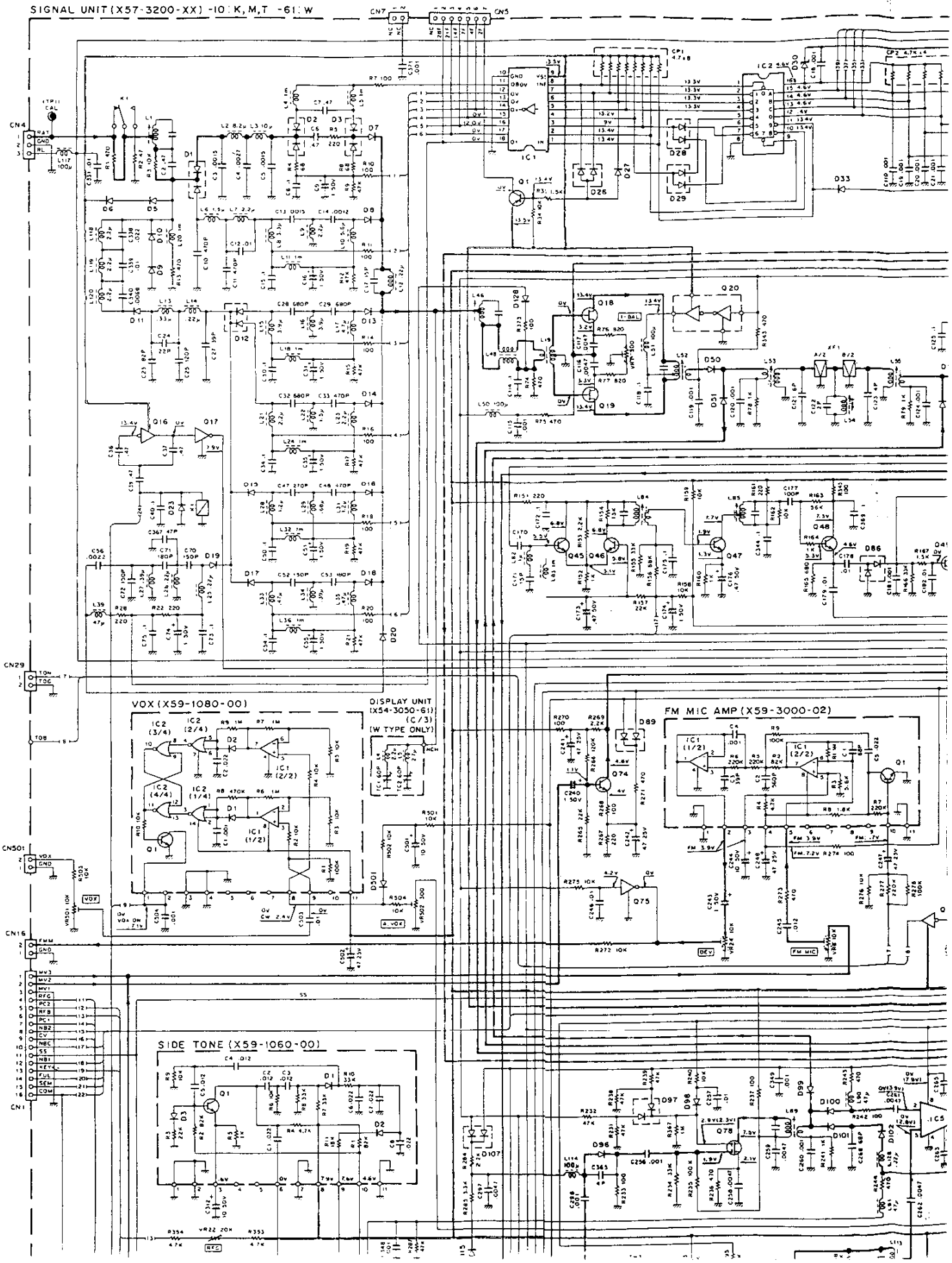

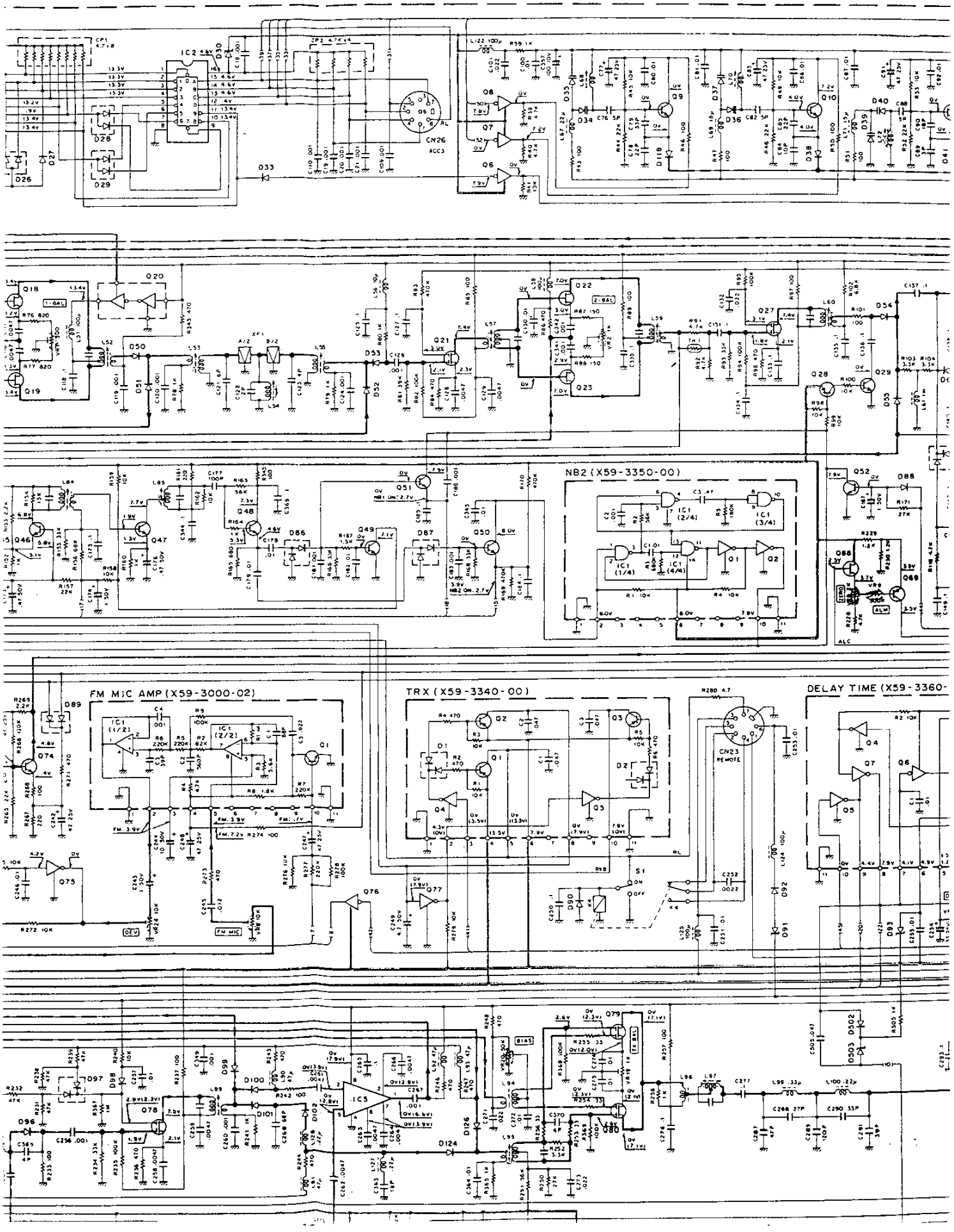
NB2 (X59-3350-00)
FM MIC AMP (X59-3000-02)
TRX (X59-3340-00)
DELAY TIME (X59-3360-
CN26
ACC3
CN23
REMOTE
IC2
IC5
IC1 (1/2)
IC1 (2/2)
IC1 (1/4)
IC1 (2/4)
IC1 (3/4)
IC1 (4/4)
DEV
FM MIC
BIAS
ALC
ALM
ZERO

Voltage measurement condition f = 14MHz, Mode : USB. ( ) : TX.

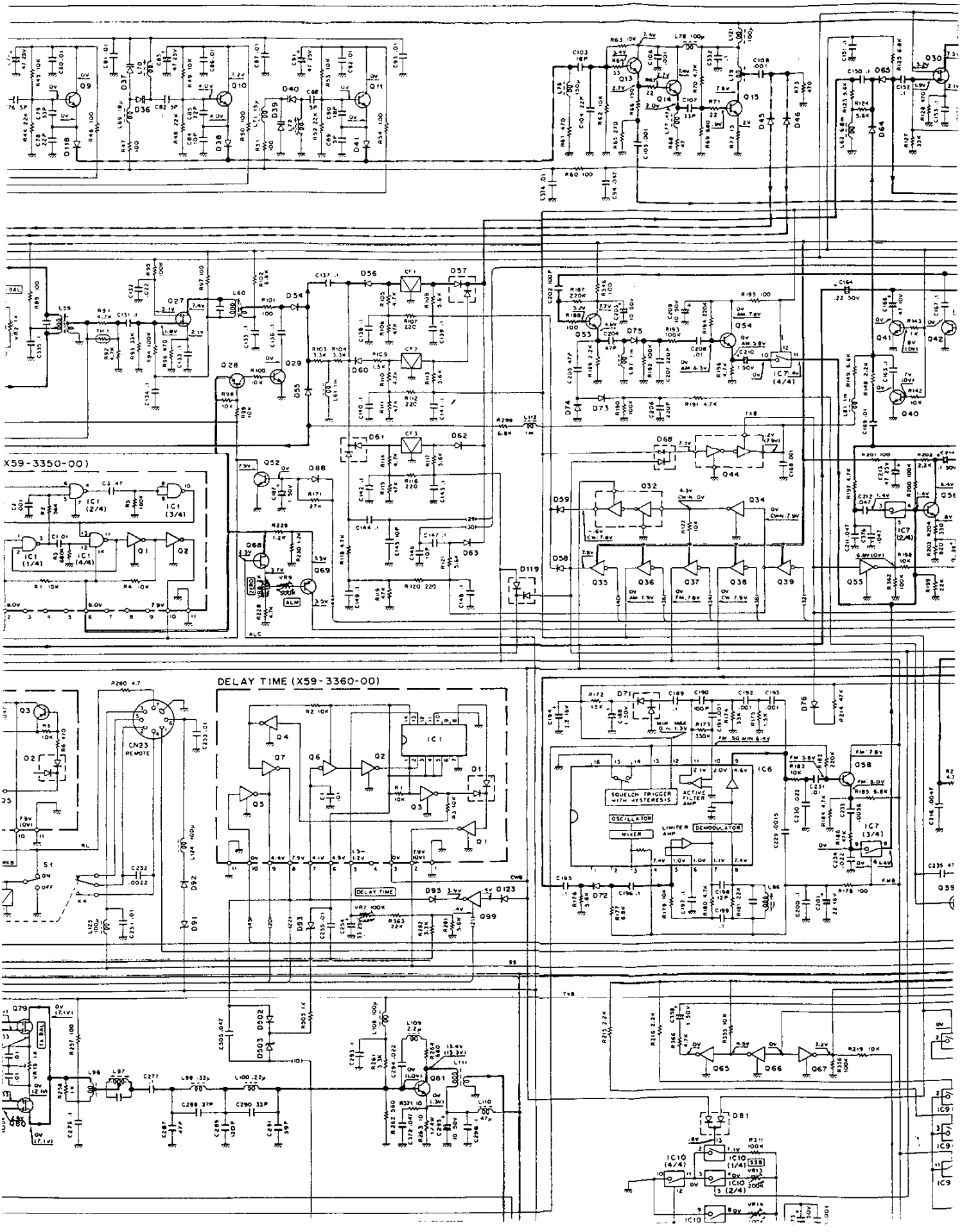

CIRCUIT DIAGRAM (TS-140S)

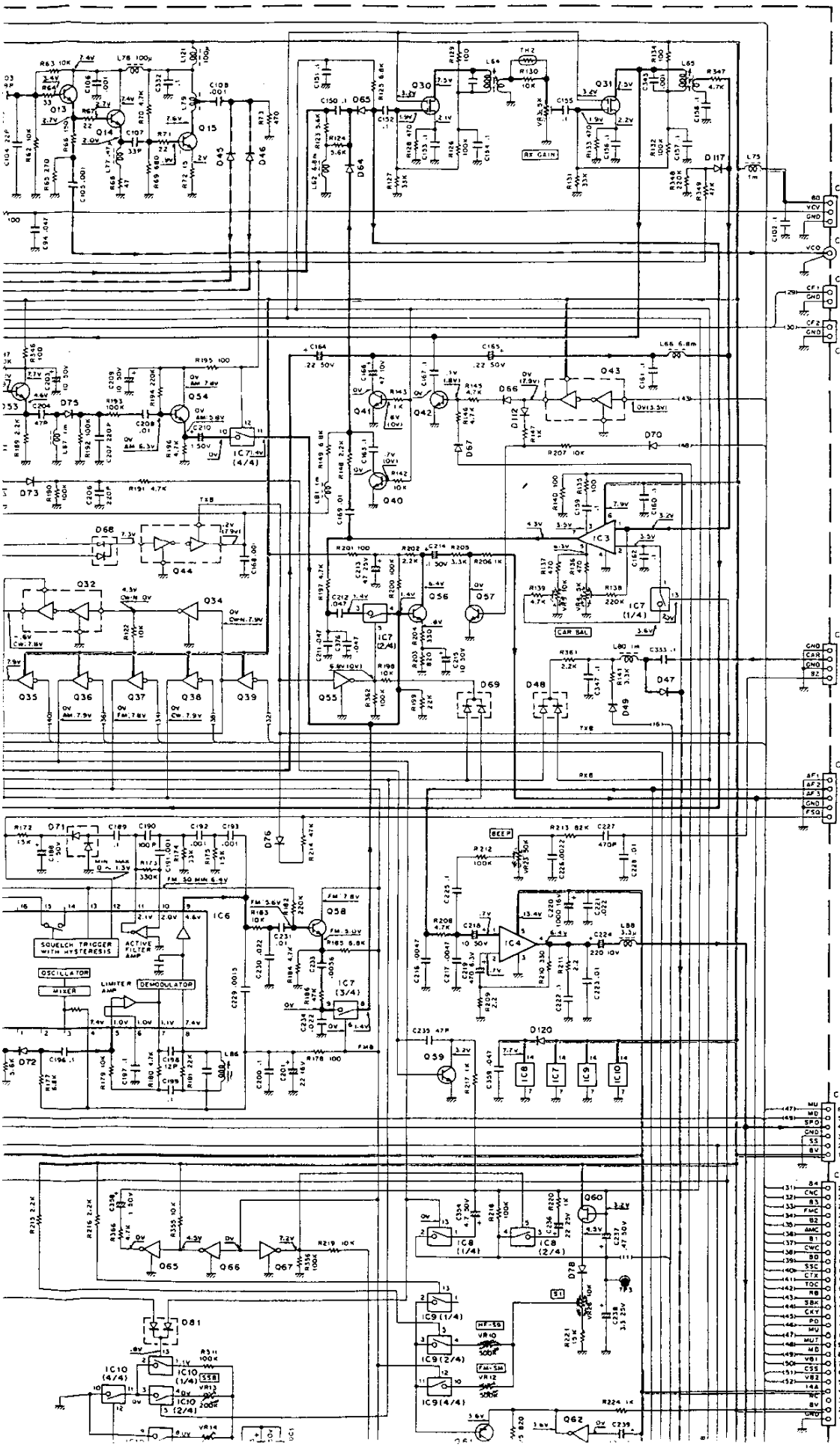

FOR SERVICE MANUALS
CONTACT:
MAURITRON TECHNICAL SERVICES
www.mauritron.co.uk
TEL: 01844 - 351694
FAX: 01844 - 352554

(X57-3200-XX)

Q1,28,61,69,87,90	: 2SA1162(Y)
Q17,34,55,65~67,75,77,84, 91,92,96,97,99.	: DTC114EK
Q6~8,35~39,76	: DTA143EK
Q9~11,13	: 2SC2668(Y)
Q14	: 2SC1907
Q15,81	: 2SC2053
Q16	: DTA114EK
Q18,19,22,23	: 2SK125-5
Q20,32,43,44,82,88	: FMC3
Q21,79,80	: 3SK122(L)
Q27,30,31,78,86	: 3SK73(GR)
Q29,40~42,45~54,56~59, 74,89,98	: 2SC2712(Y)
Q60,68	: 2SK192A(Y)
Q62,93	: DTC114TK
IC1	: M54581P
IC2	: M74LS145P
IC3	: AN612
IC4	: μPC2002V
IC5	: SN16913P
IC6	: MC3357P
IC7~10	: TC4066BP
IC11	: LM324N
IC12	: AN7808
D1~3,12	: DAN235K
D5,10	: US1090
D6,9	: V08(G)
D7,8,11,13~20,38,41,45,46, 50~53,99~102,109,110,118, 122,124,126	: RLS135
D23,90	: 1S1555
D48,57,61,68,69,77, 79~81,85,89,97,107,119	: DAN202K
D26,28,29	: DAP202K
D27,33,49,54~56,58~60, 62~67,70,72~74,76,78,83, 88,92,93,108,112~115,117,120, 123,128,501,502	: RLS73
D30,93,503	: UZ-3.0B
D34~37,39,40	: 1TT310TE
D47,96	: MI204
D71,82,86,87	: HSM88AS
D91	: MTZ9.1JB
D111	: KB-369
D116,125	: RLZ3.6B
D75,98	: 1N60PSPA
TH1~4	: 112-502-2

(X59-1060-00)

Q1	: 2SC2712(Y)
D1,3	: DAN202K
D2	: DAP202K

(X59-1080-00)

Q1	: 2SC2712(Y)
IC1	: NJM2904M
IC2	: TC4001BF
D1,2	: DAP202K

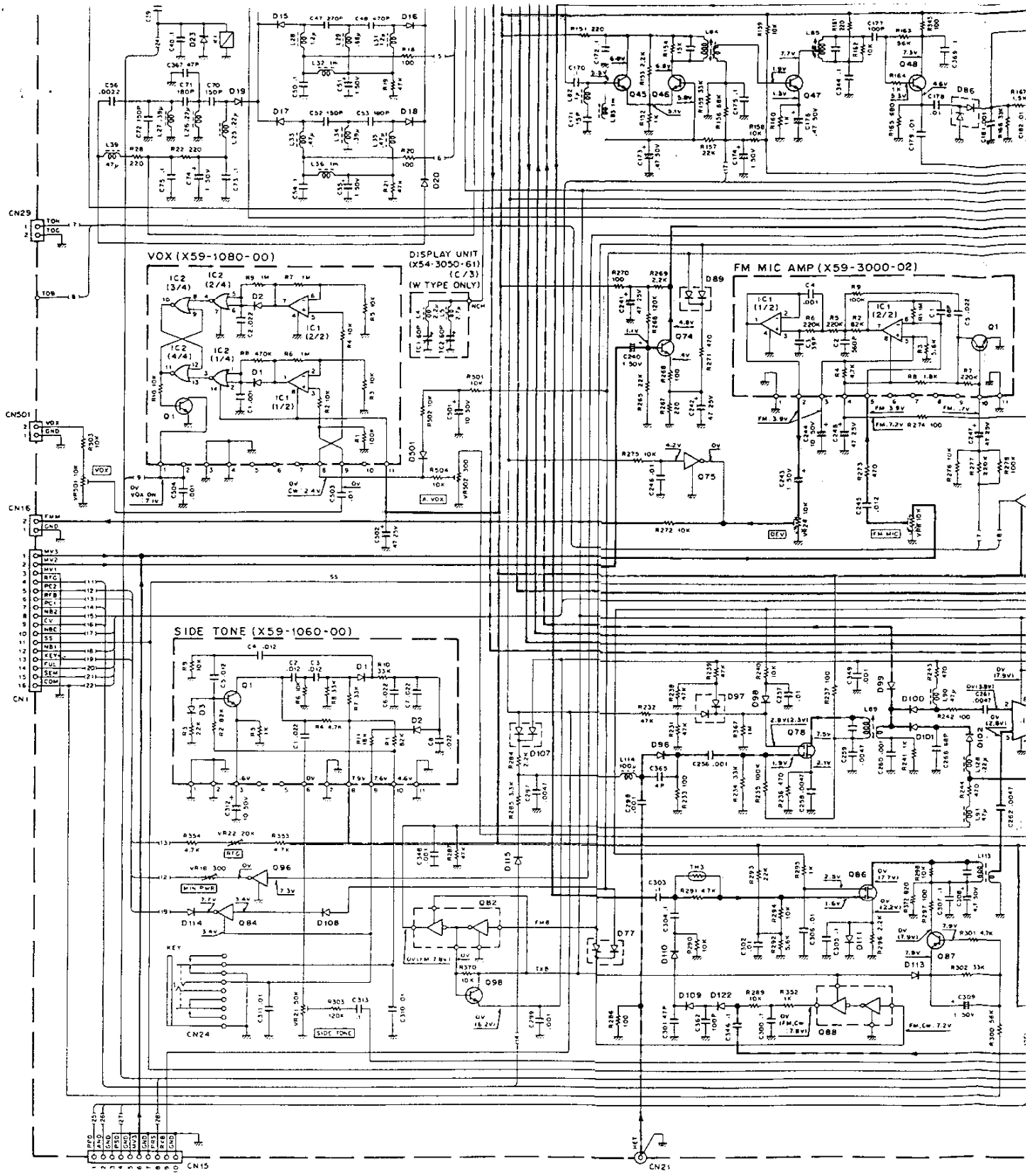

M74LS145P

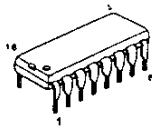

μPC2002V

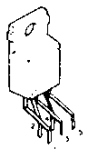

SN16913P

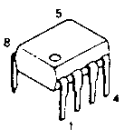

MC3357P

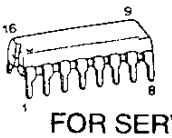

AN7808

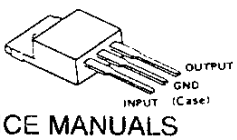

AN612

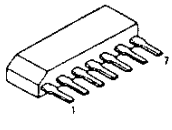

TC4066B

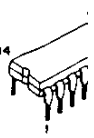

TC4001BF
TC4011BF

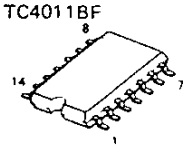

MB74LS122

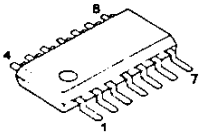

M54581P

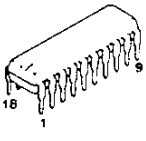

FOR SERVICE MANUALS
CONTACT:

MAURITRON TECHNICAL SERVICES
www.mauritron.co.uk
TEL: 01844 - 351694
FAX: 01844 - 352554

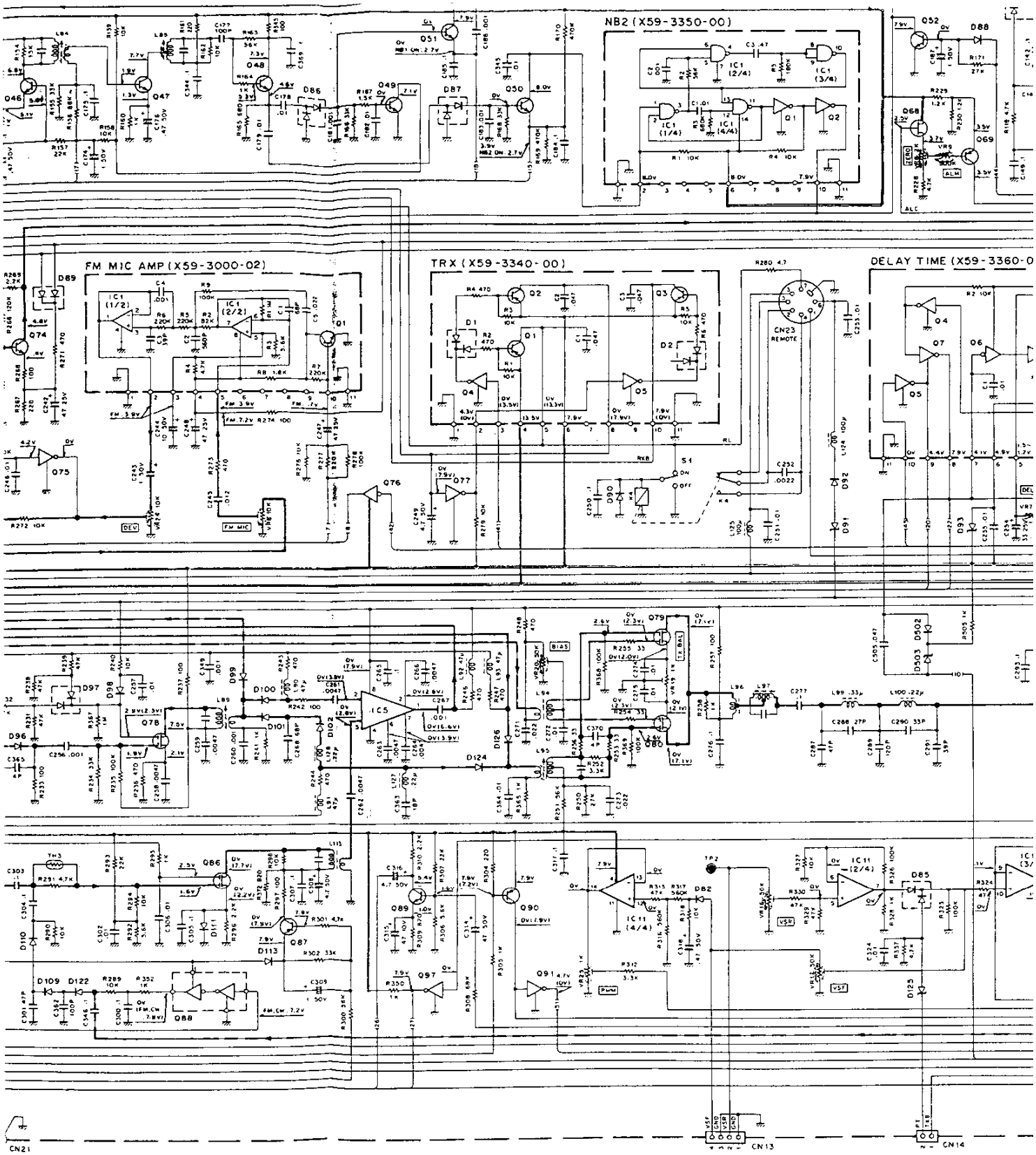

AN7808

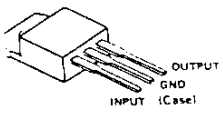

AN612

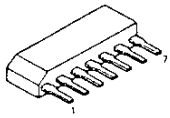

TC4066BP

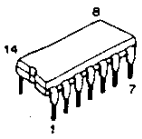

LM324N

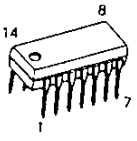

2SA1162(Y)
2SA1182(Y)
2SC2712(Y)
DTA114EK
DTA143EK
DTC114EK
DTC114TK

2SC2053

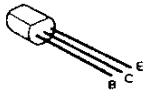

2SC1907

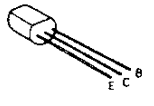

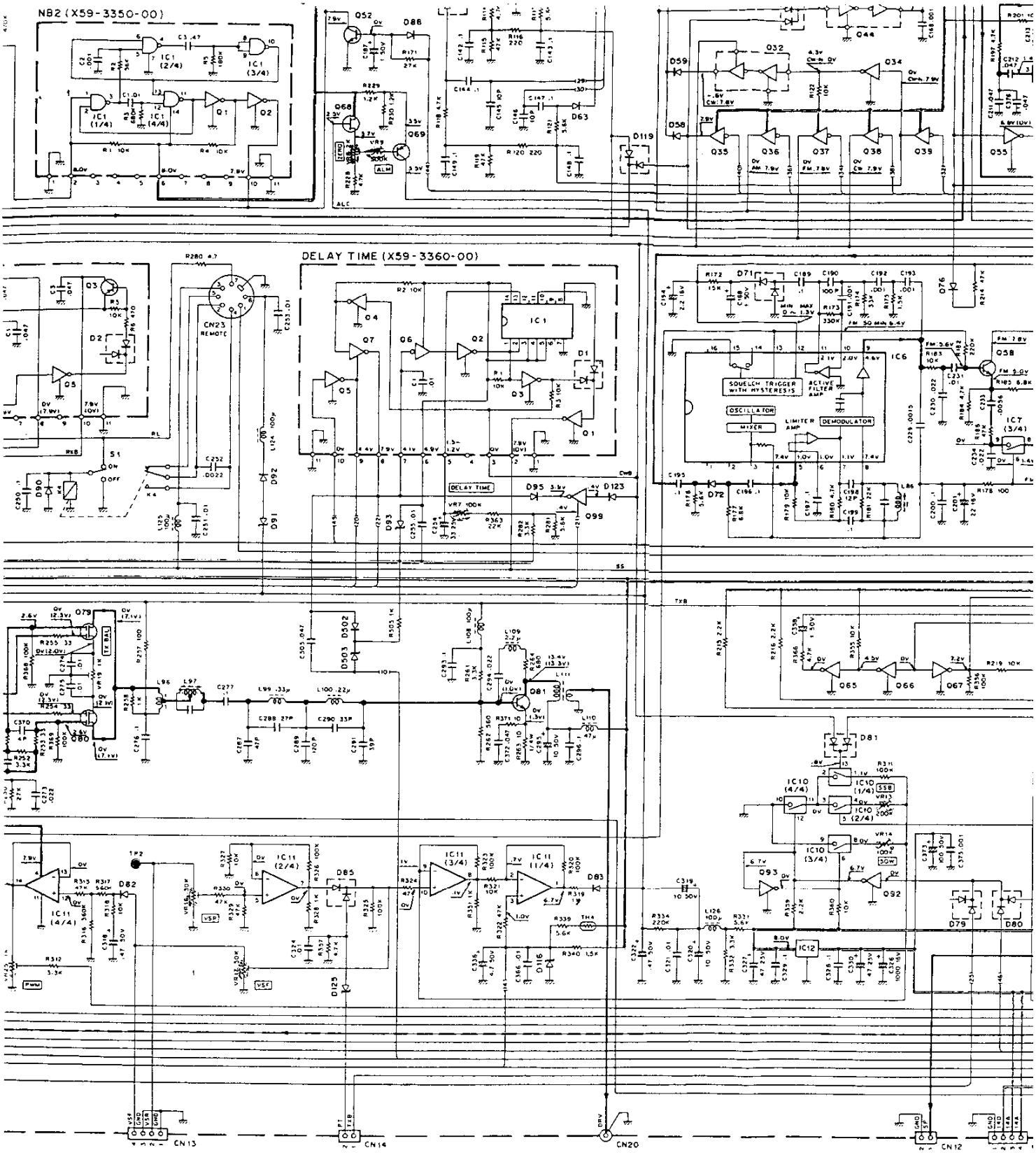

2SA1162(Y)
2SA1182(Y)
2SC2712(Y)
DTA114EK
DTA143EK
DTC114EK
DTC114TK

2SC2053

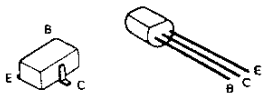

2SC1907

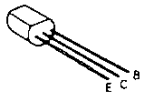

2SK125-5

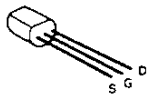

FMC3

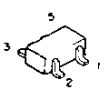

3SK122(L)

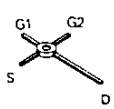

3SK73(GR)

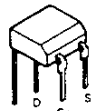

FOR SERVICE MANUALS
CONTACT:
MAURITRON TECHNICAL SERVICES
www.mauritron.co.uk
TEL: 01844 - 351694
FAX: 01844 - 352554

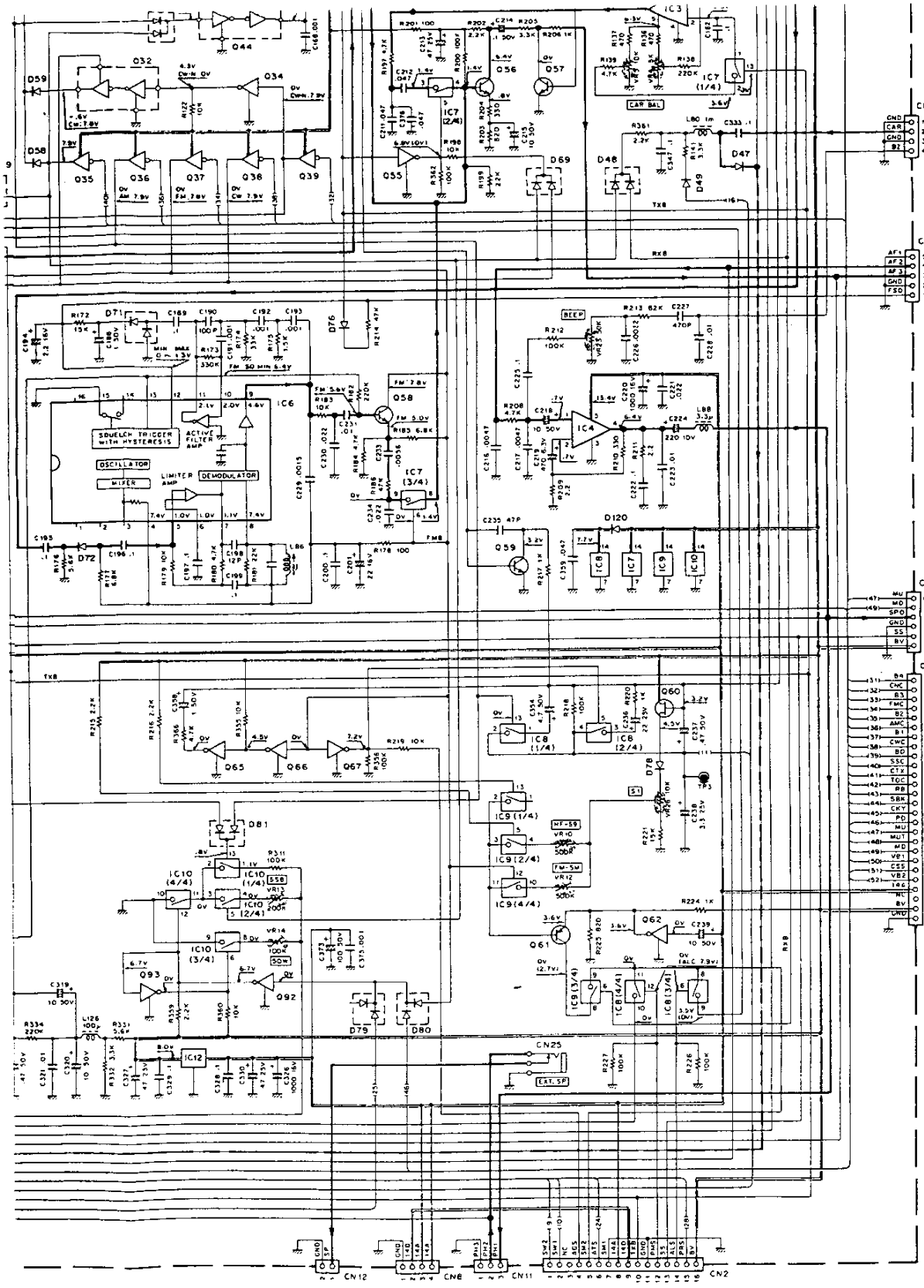

(X57-3200-XX)

Q1,28,61,69,87,90	: 2SA11
Q17,34,55,65~67,75,77,84, 91,92,96,97,99.	: DTC11
Q6~8,35~39,76	: DTA14
Q9~11,13	: 2SC26
Q14	: 2SC19
Q15,81	: 2SC20
Q16	: DTA11
Q18,19,22,23	: 2SK12
Q20,32,43,44,82,88	: FMC3
Q21,79,80	: 3SK12
Q27,30,31,78,86	: 3SK73
Q29,40~42,45~54,56~59, 74,89,98	: 2SC27
Q60,68	: 2SK19
Q62,93	: DTC11
IC1	: M5458
IC2	: M74LS
IC3	: AN612
IC4	: μPC20
IC5	: SN169
IC6	: MC335
IC7~10	: TC406
IC11	: LM324
IC12	: AN780
D1~3,12	: DAN23
D5,10	: US109
D6,9	: VD8(G
D7,8,11,13~20,38,41,45,46, 50~53,99~102,109,110,118, 122,124,126	: RLS13
D23,90	: 1S155
D48,57,61,68,69,77, 79~81,85,89,97,107,119	: DAN20
D26,28,29	: DAP20
D27,33,49,54~56,58~60, 62~67,70,72~74,76,78,83, 88,92,95,108,112~115,117,120, 123,128,501,502	: RLS73
D30,93,503	: UZ-3.0
D34~37,39,40	: 1TT31
D47,96	: MI204
D71,82,86,87	: HSM8
D91	: MTZ9.
D111	: KB-36
D116,125	: RLZ3.
D75,98	: 1N60P
TH1~4	: 112-5

(X59-1060-00)

Q1	: 2SC2712(Y)
D1,3	: DAN202K
D2	: DAP202K

(X59-1080-00)

Q1	: 2SC2712(Y)
IC1	: NJM2904M
IC2	: TC4001BF
D1,2	: DAP202K

(X59-3000-02)

Q1	: 2SC2712(Y)
IC1	: NJM4558M

(X59-3340-00)

Q1,2	: 2SA1204(Y)
Q3	: 2SA1182(Y)
Q4,5	: DTC114EK
D1,2	: DAN202(K)

(X59-3350-00)

Q1,2	: DTC114EK
IC1	: TC40118F

(X59-3360-00)

Q1~5	: DTC114EK
Q6	: DTA114EK
Q7	: DTC114TK
D1	: DAN202(K)
IC1	: M874LS122

FMC3

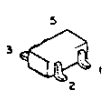

3SK122(L)

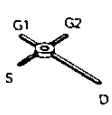

3SK73(GR)

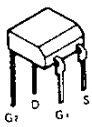

2SC2668(Y)

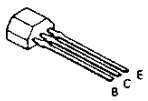

2SK192A(Y)
2SK192A(GR)•J

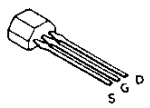

NJM2904M
NJM4558M

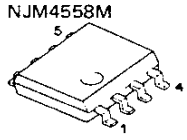

2SA1204(Y)

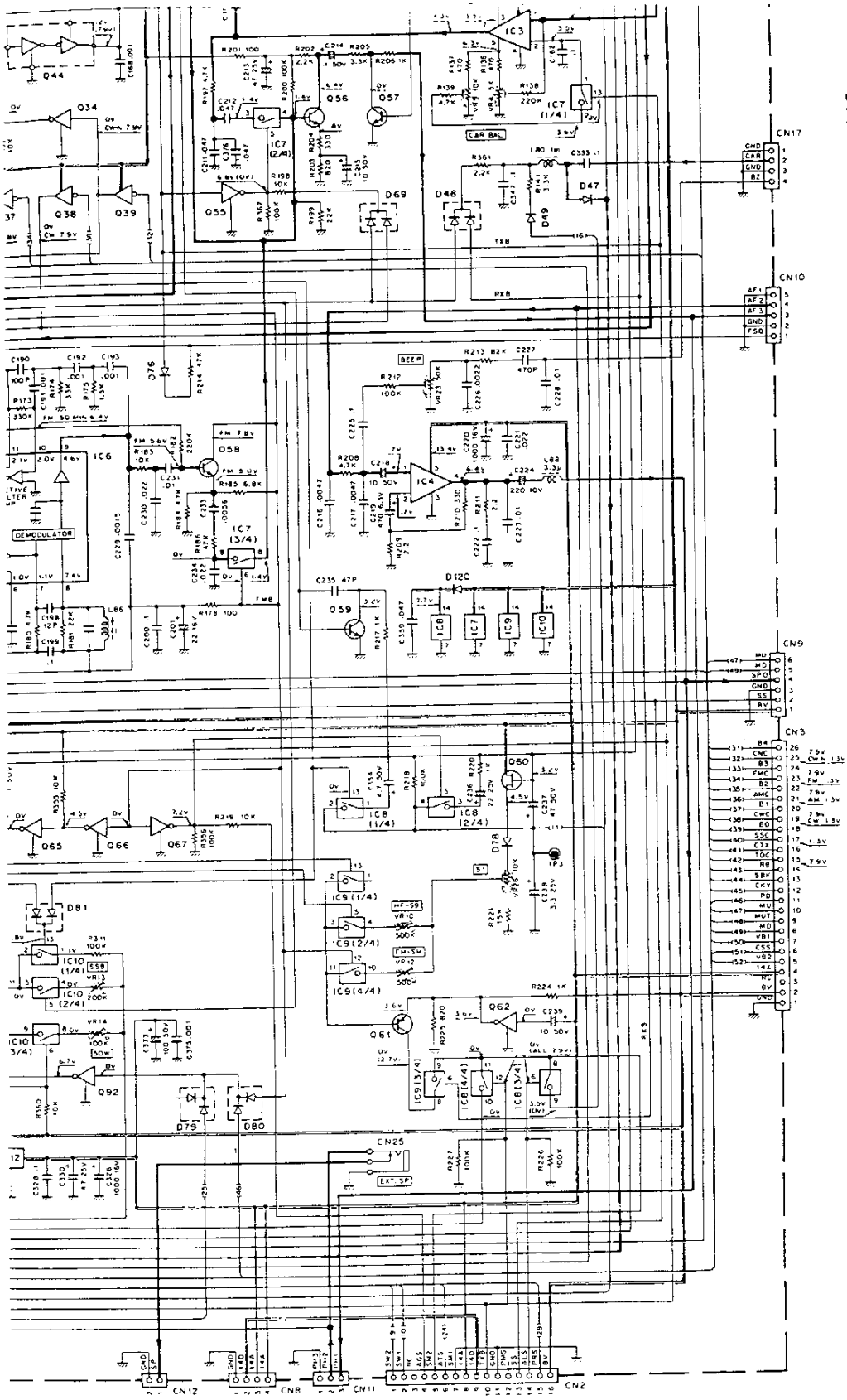

(X57-3200-XX)

Q1,28,61,69,87,90	: 2SA1162(Y)
Q17,34,55,65~67,75,77,84, 91,92,96,97,99.	: DTC114EK
Q6~8,35~39,76	: DTA143EK
Q9~11,13	: 2SC2668(Y)
Q14	: 2SC1907
Q15,81	: 2SC2053
Q16	: DTA114EK
Q18,19,22,23	: 2SK125-5
Q20,32,43,44,82,88	: FMC3
Q21,79,80	: 3SK122(L)
Q27,30,31,78,86	: 3SK73(GR)
Q29,40~42,45~54,56~59, 74,89,98	: 2SC2712(Y)
Q60,68	: 2SK192A(Y)
Q62,93	: DTC114TK
IC1	: M54581P
IC2	: M74LS145P
IC3	: AN612
IC4	: μPC2002V
IC5	: SN16913P
IC6	: MC3357P
IC7~10	: TC4066BP
IC11	: LM324N
IC12	: AN7808
D1~3,12	: DAN235K
D5,10	: US1090
D6,9	: V08(G)
D7,8,11,13~20,38,41,45,46, 50~53,99~102,109,110,118, 122,124,126	: RLS135
D23,90	: 1S1555
D48,57,61,68,69,77, 79~81,85,89,97,107,119	: DAN202K
D26,28,29	: DAP202K
D27,33,49,54~56,58~60, 62~67,70,72~74,76,78,83, 88,92,95,108,112~115,117,120, 123,128,501,502	: RLS73
D30,93,503	: UZ-3.0B
D34~37,39,40	: ITT310TE
D47,96	: M1204
D71,82,86,87	: HSM88AS
D91	: MTZ9.1JB
D111	: KB-369
D116,125	: RLZ3.6B
D75,98	: 1N60PSPA
TH1~4	: 112-502-2

(X59-1060-00)

Q1	: 2SC2712(Y)
D1,3	: DAN202K
D2	: DAP202K

(X59-1080-00)

Q1	: 2SC2712(Y)
IC1	: NJM2904M
IC2	: TC4001BF
D1,2	: DAP202K

(X59-3000-02)

Q1	: 2SC2712(Y)
IC1	: NJM4558M

(X59-3340-00)

Q1,2	: 2SA1204(Y)
Q3	: 2SA1182(Y)
Q4,5	: DTC114EK
D1,2	: DAN202(K)

(X59-3350-00)

Q1,2	: DTC114EK
IC1	: TC4011BF

(X59-3360-00)

Q1~5	: DTC114EK
Q6	: DTA114EK
Q7	: DTC114TK
D1	: DAN202(K)
IC1	: MB74LS122

3SK122(L)

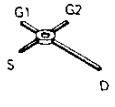

3SK73(GR)

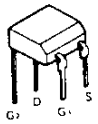

2SC2668(Y)

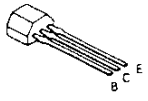

2SK192A(Y)
2SK192A(GR)•J

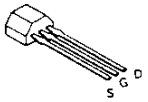

NJM2904M
NJM4558M

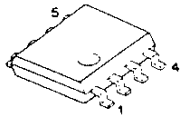

2SA1204(Y)

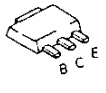

SWITCH UNIT (X41-3030-XX) -00 : TS-680S -11 : TS-140S Component side view

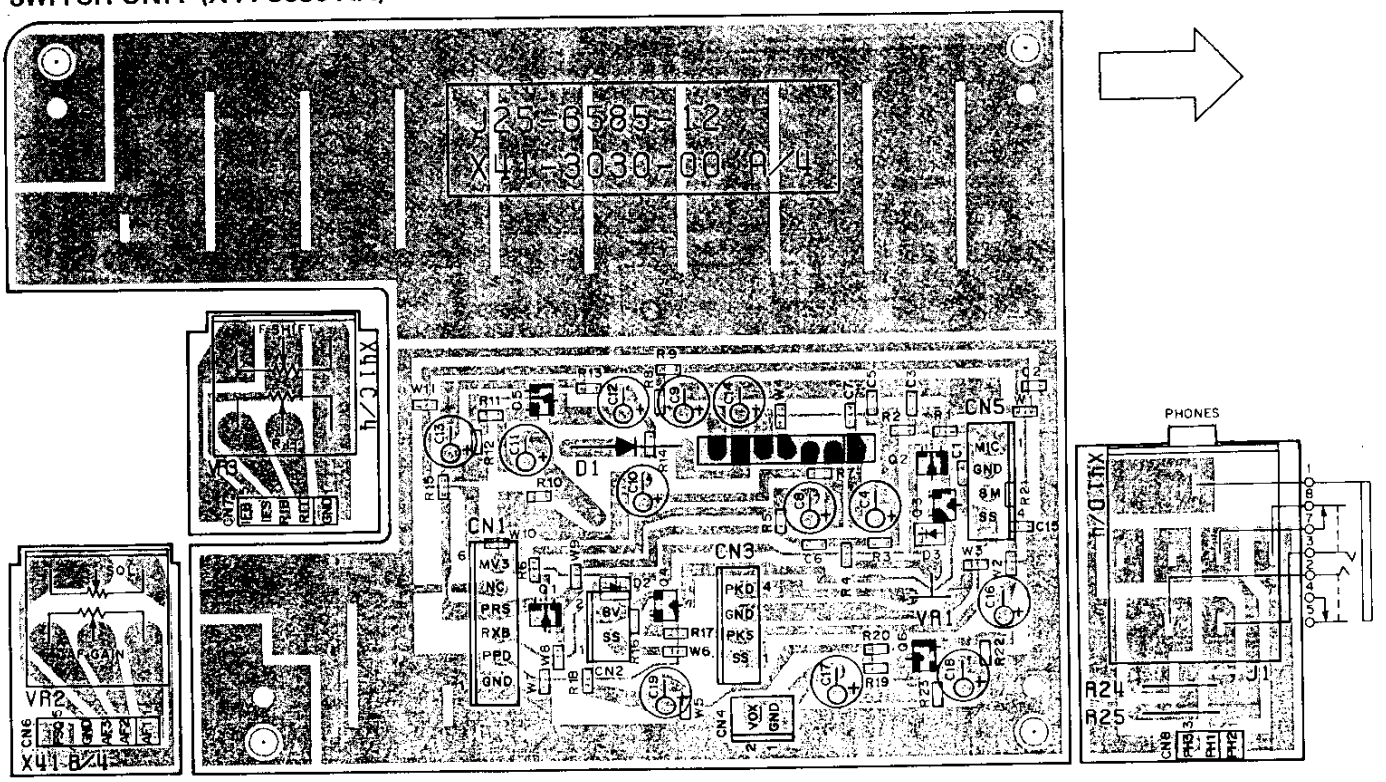

SWITCH UNIT (X41-3030-XX) -00 : TS-680S -11 : TS-140S Foil side view

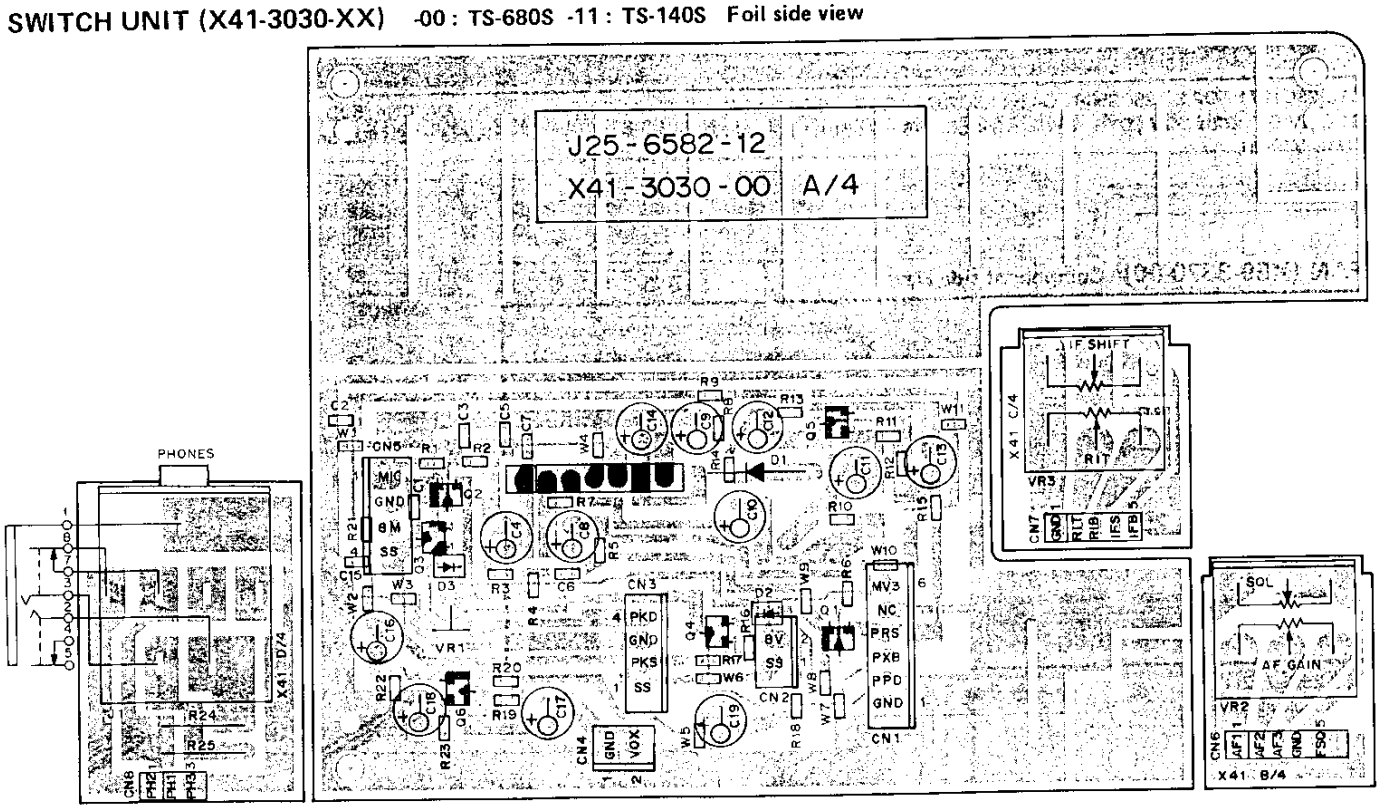

Q1–3 : DTC114EK Q4 : 2SA1162(Y) Q5,6 : 2SC2712(Y)
IC1 : μPC1158H2
D1 : 1N60 D2,3 : RLS73

CN4,Q6
C16–C19
R18–R23
} TS-140S only

μPC1158H2

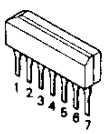

2SA1162(Y)
2SC2712(Y)
DTC114EK

TS-140S/680S PC BOARD VIEWS

FINAL UNIT (X45-3100-XX) -00 : TS-680S -11 : TS-140S Component side view

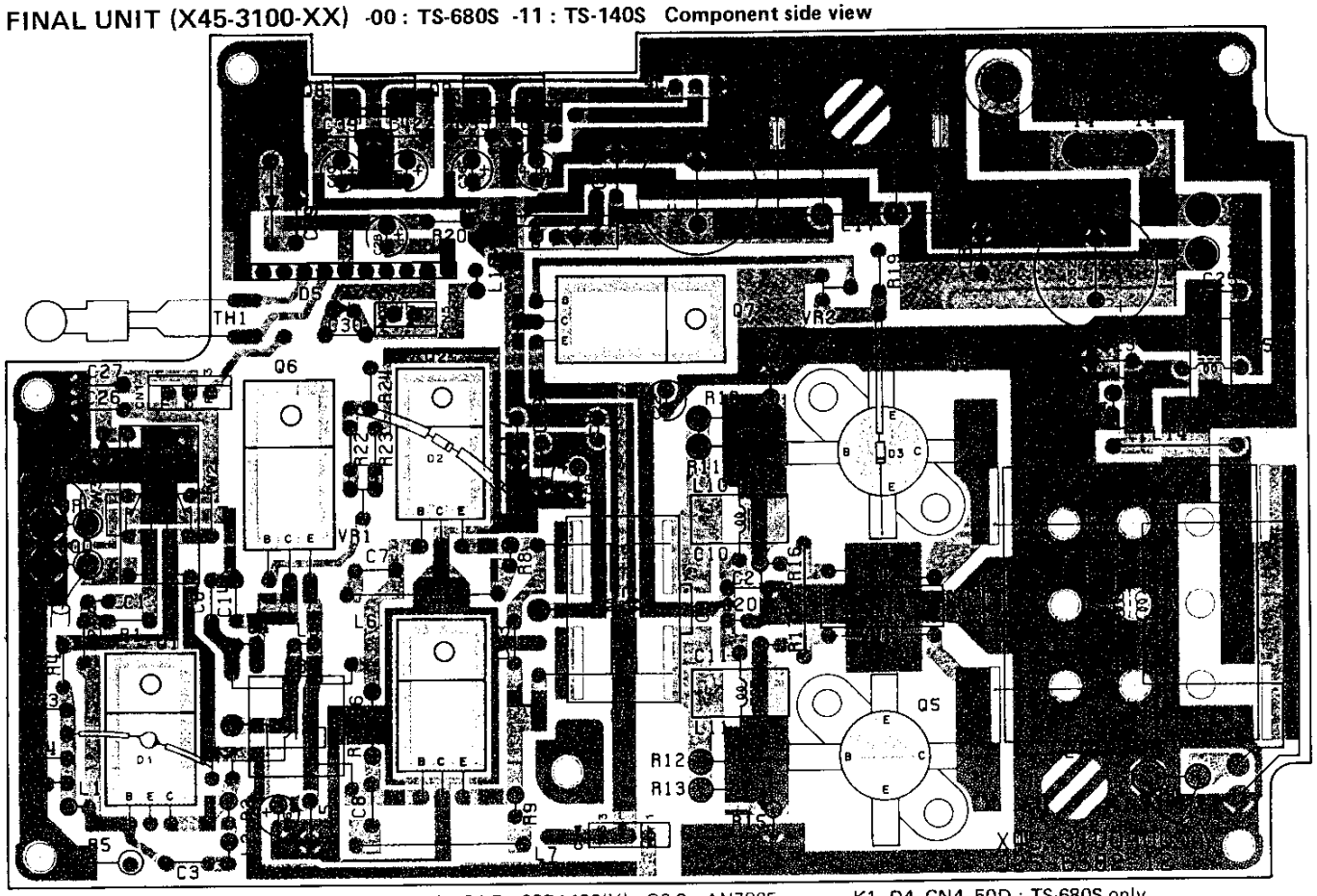

Q1 : 2SC1971 Q2,3 : 2SC2509 Q4,5 : 2SC2879 Q6,7 : 2SD1406(Y) Q8,9 : AN7805
D1 : MV-5T D2,3 : SV-03YS D4,5 : 1S1555 D6 : SG-5LR D7 : MTZ8.2JA
TH1 : 5TP41L

K1, D4, CN4, 50D : TS-680S only
W2, 3 : TS-140S only

FAN (X59-3370-00) Component side view

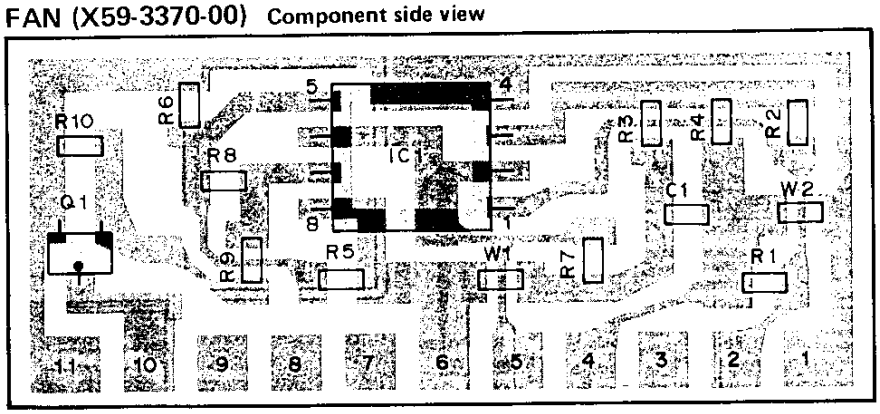

Q1 : 2SC2712(Y)
IC1 : NJM4558M

AN7805

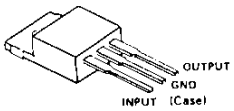

2SC2712(Y)

NJM4558M

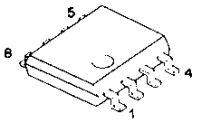

2SC2879

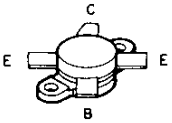

2SC1971

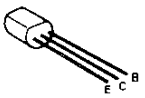

2SD1406

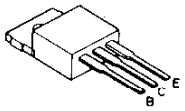

M57735

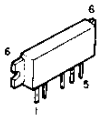

2SC2459

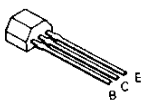

2SC2509

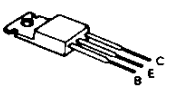

2SC2538-22-A

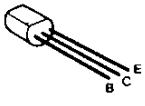

FOR SERVICE MANUALS
CONTACT:
MAURITRON TECHNICAL SERVICES
www.mauritron.co.uk
TEL: 01844 - 351694
FAX: 01844 - 352554

FILTER UNIT (X51-3040-00) : TS-680S Component side view

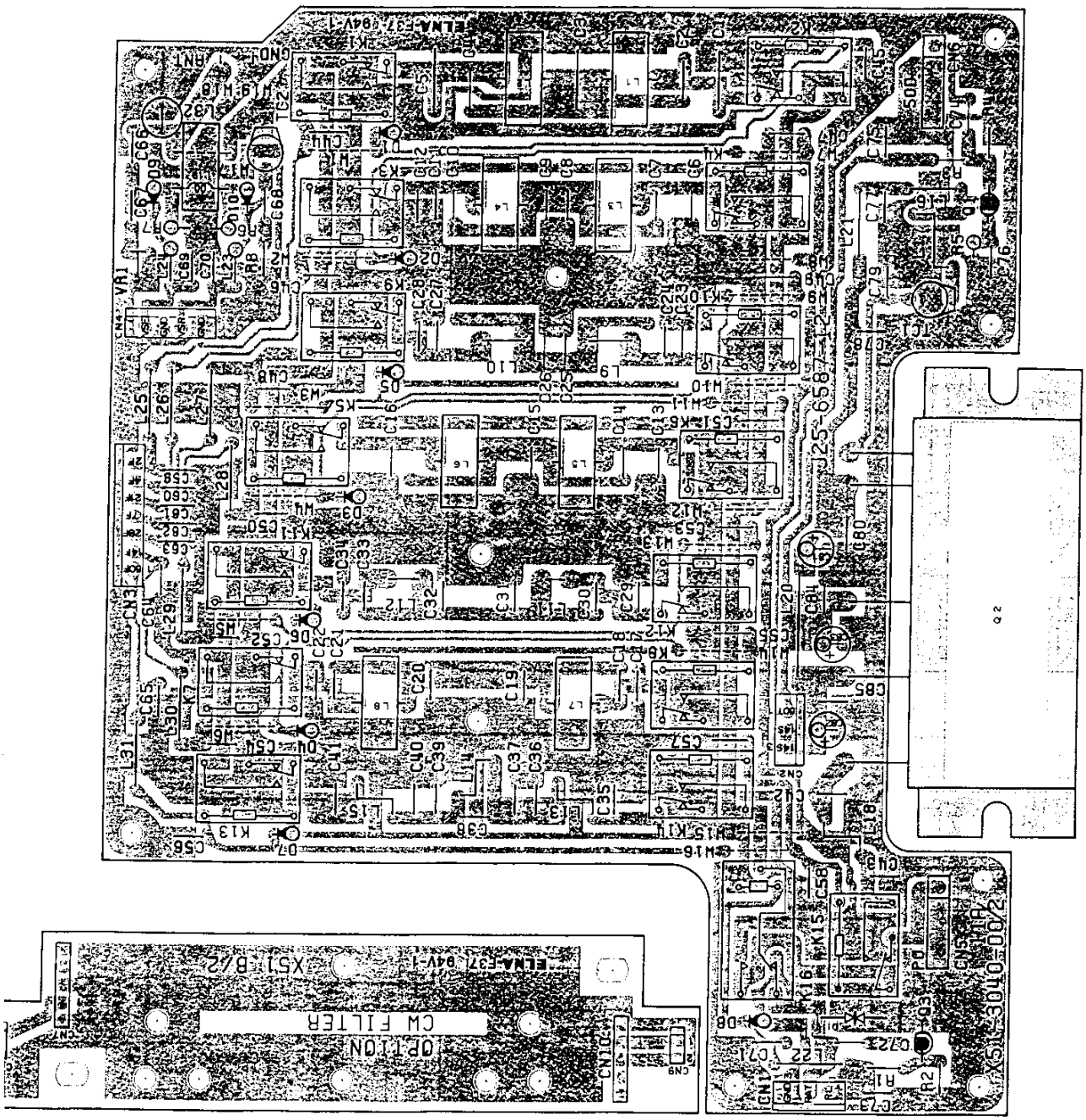

: 2SC2538-22-A Q2 : M57735 Q3 : 2SC2459(BL)
–8 : 1S1555 D9,10 : 1SS101 D11 : DSP301N

117

FILTER UNIT (X51-3040-11) : TS-140S Component side view

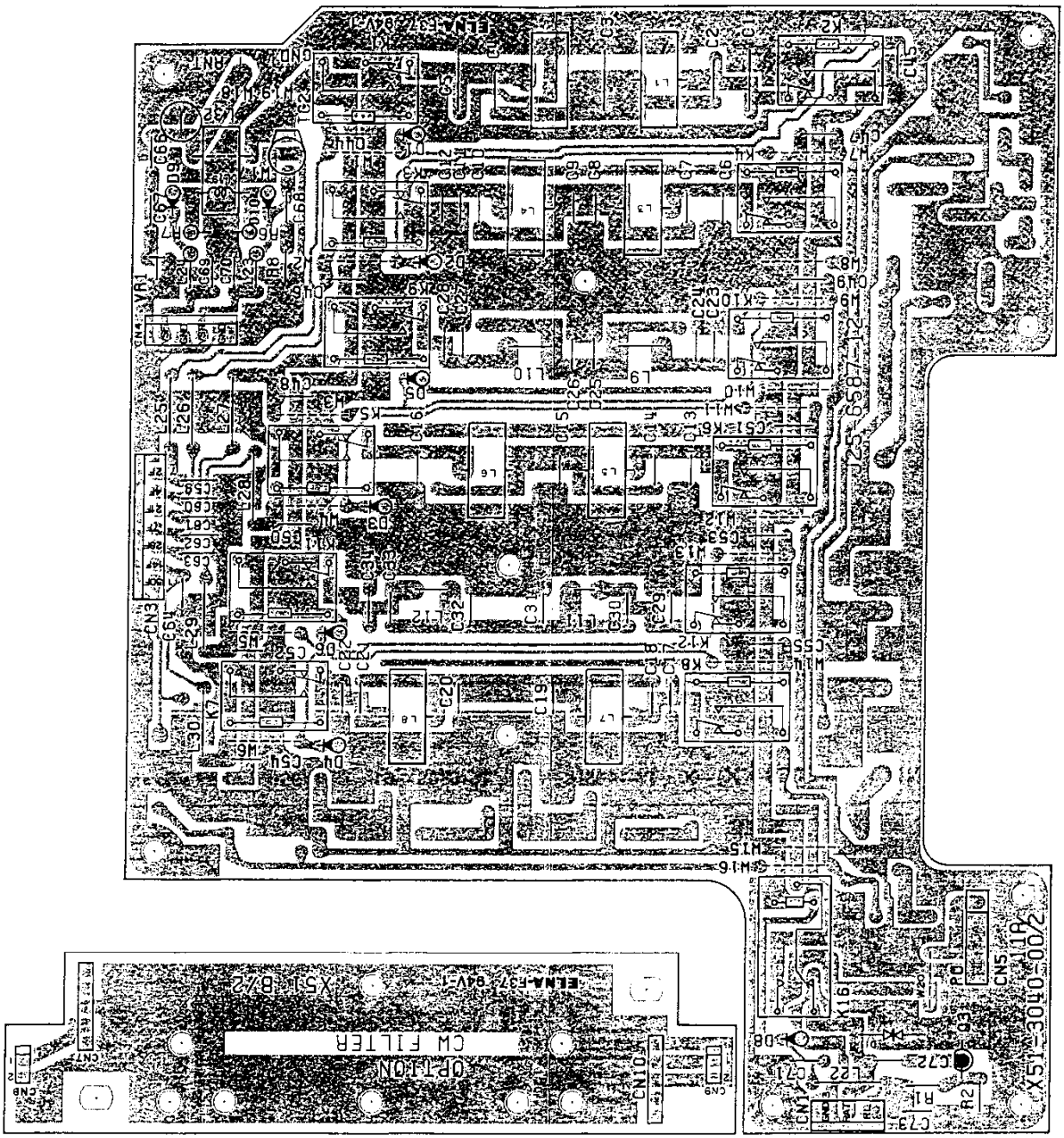

Q3 : 2SC2459(BL)
D1–6,8 : 1S1555 D9,10 : 1SS101 D11 : DSP301N

FOR SERVICE MANUALS
CONTACT:
MAURITRON TECHNICAL SERVICES
www.mauritron.co.uk
TEL: 01844 - 351694
FAX: 01844 - 352554

TS-140S/680S PC BOARD VIEWS

DISPLAY UNIT (X54-3050-XX) -00 : TS-140S(K, M, T), TS-680S -61 : TS-140S(W) Component side

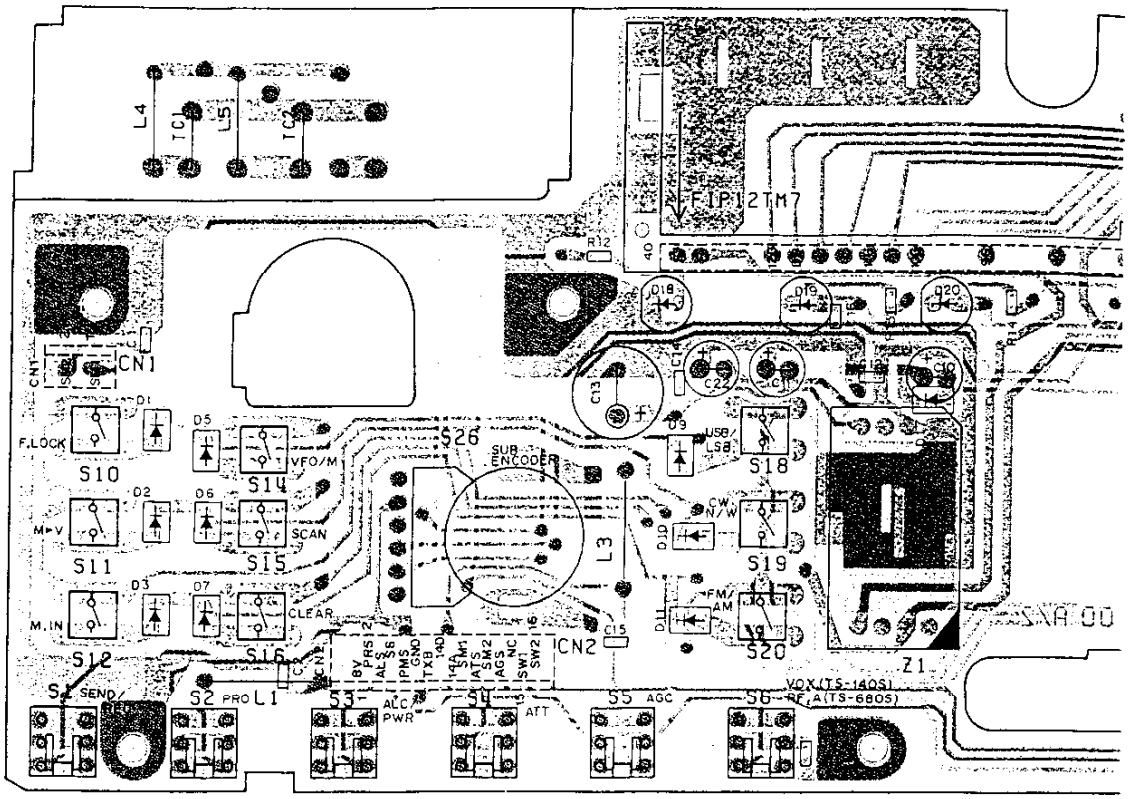

DISPLAY UNIT (X54-3050-XX) -00 : TS-140S(K, M, T), TS-680S -61 : TS-140S(W) Foil side view

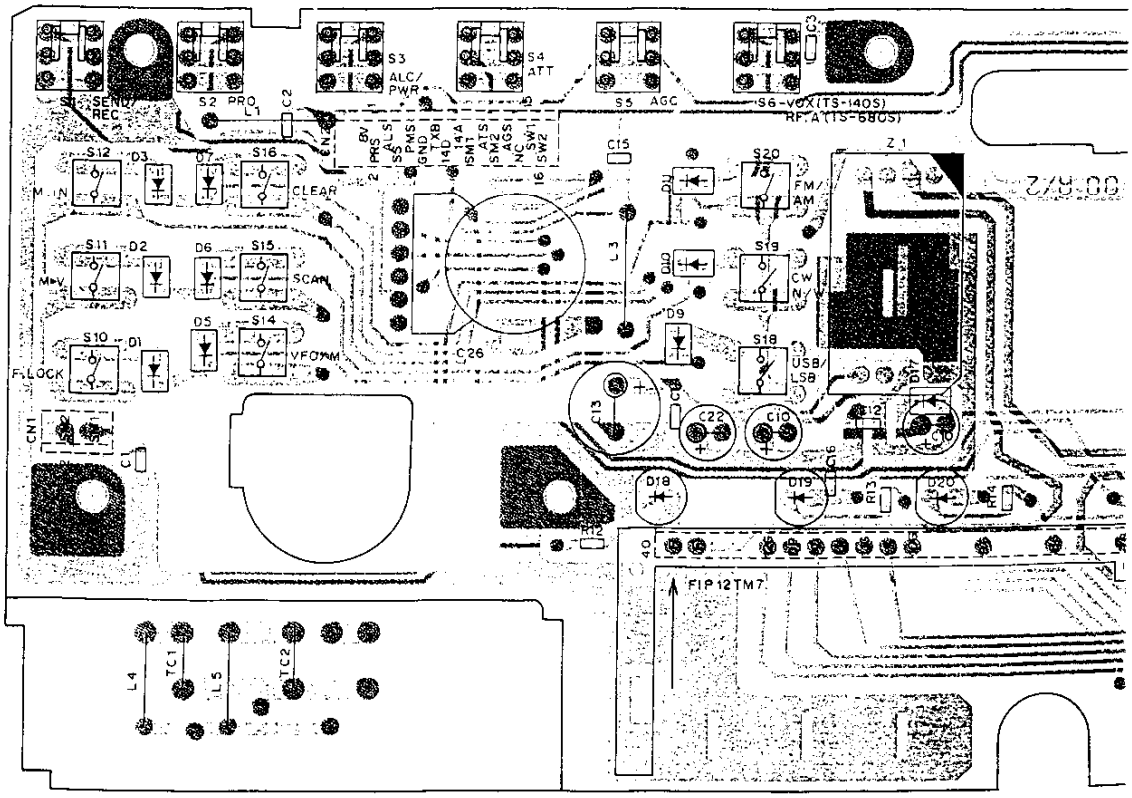

0S PC BOARD VIEWS

-3050-XX) -00 : TS-140S(K, M, T), TS-680S -61 : TS-140S(W) Component side view

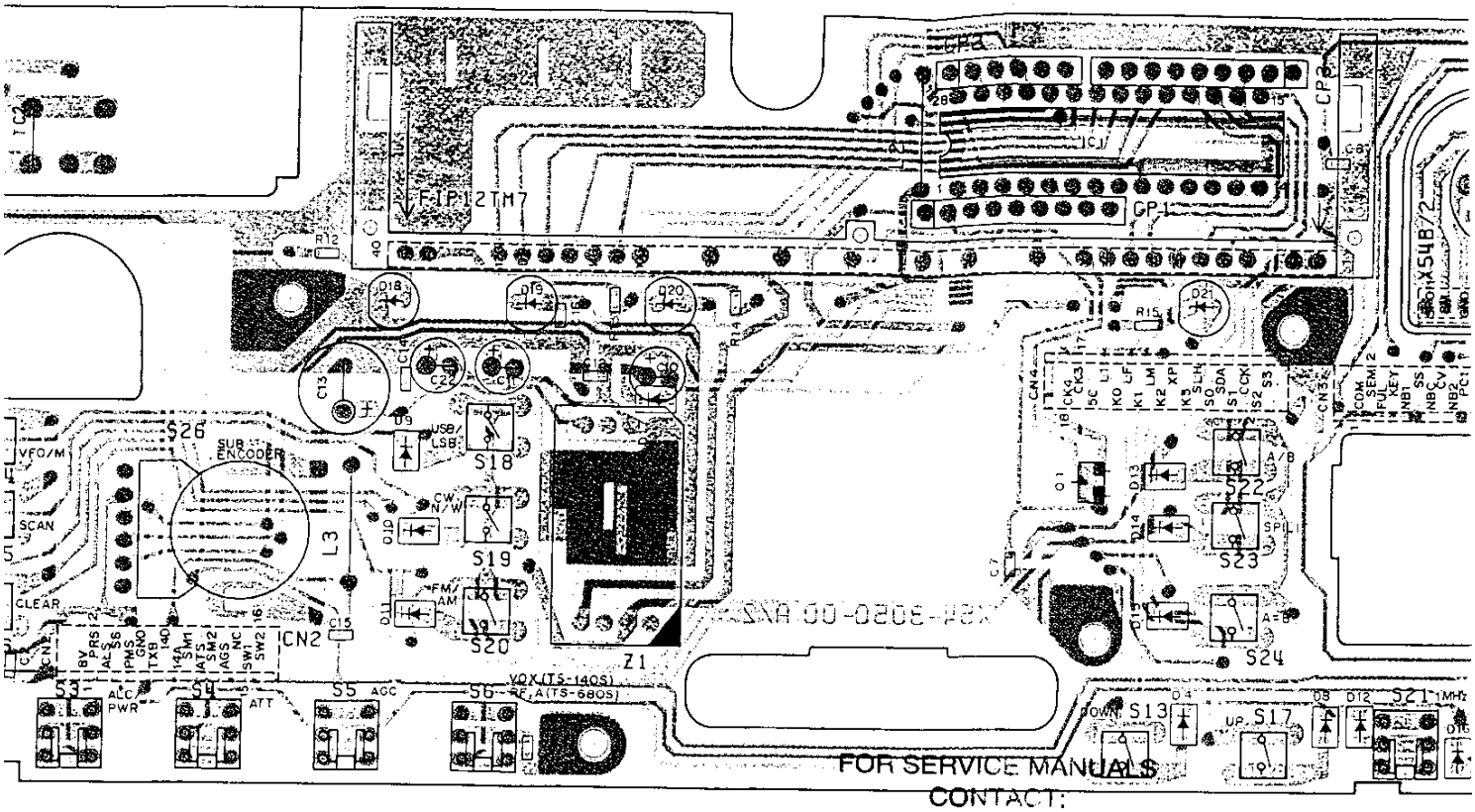

FOR SERVICE MANUALS
CONTACT:
MAURITRON TECHNICAL SERVICES
www.mauritron.co.uk
TEL: 01844 - 351694
FAX: 01844 - 352554

3050-XX) -00 : TS-140S(K, M, T), TS-680S -61 : TS-140S(W) Foil side view

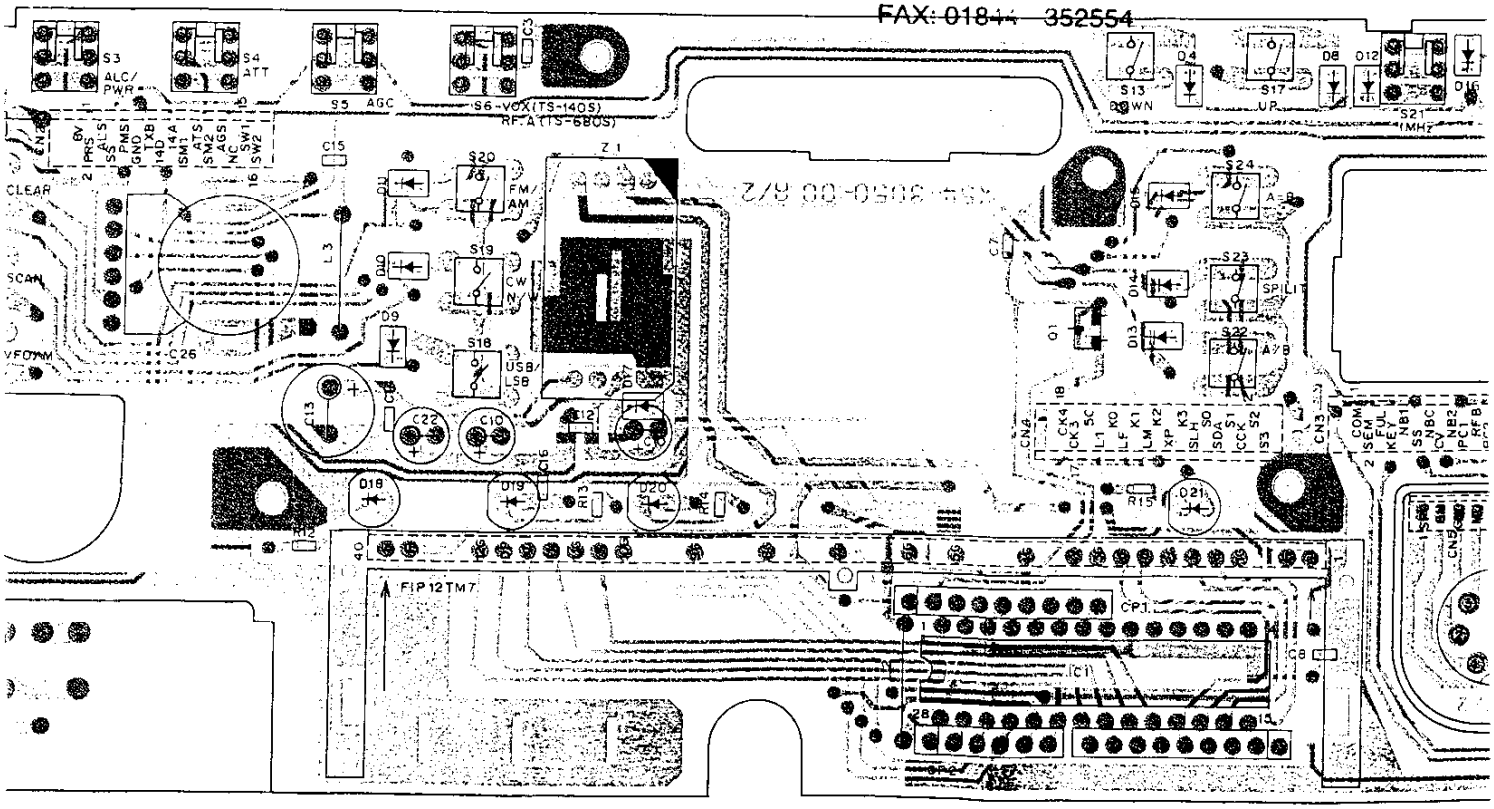

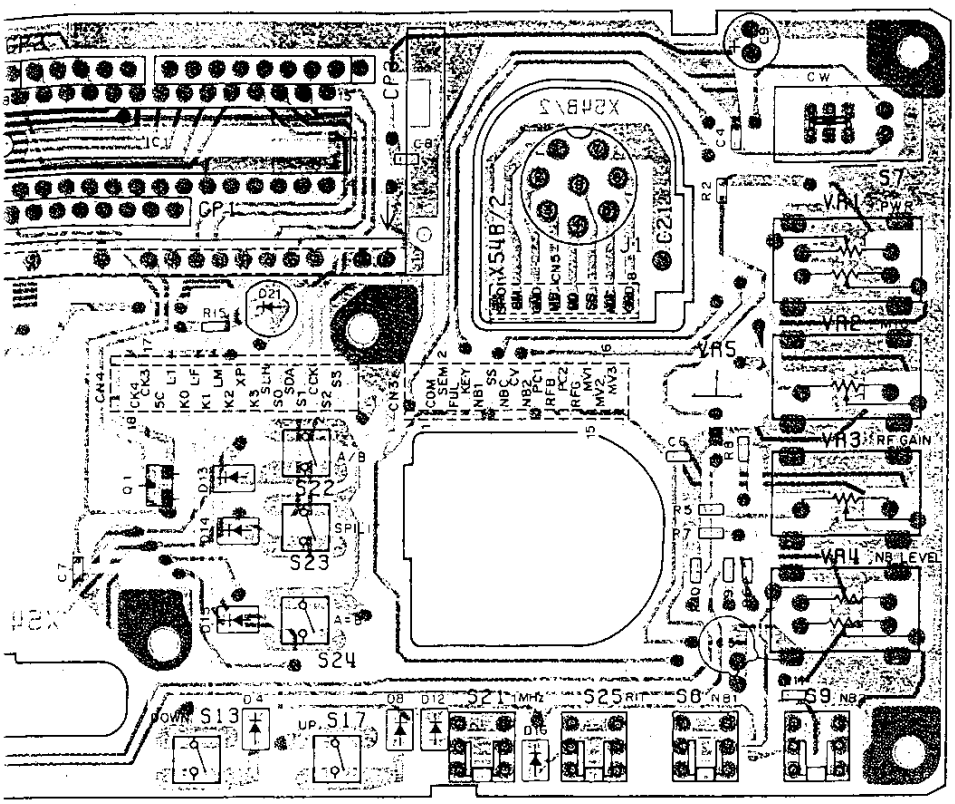

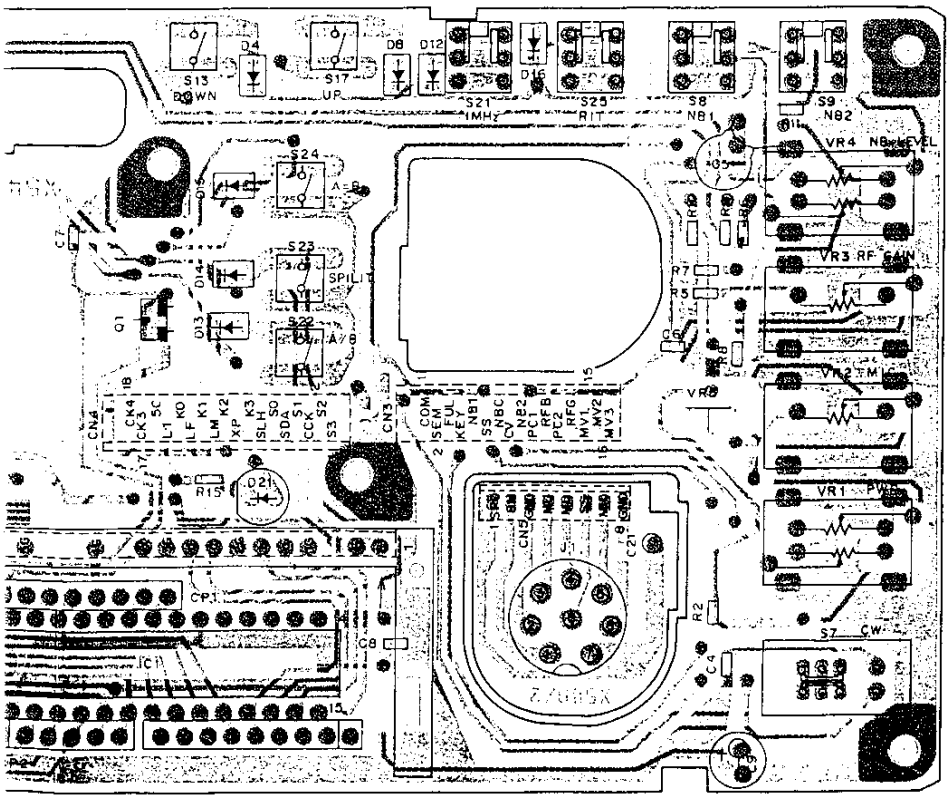

DTA114EK

μPD6300C

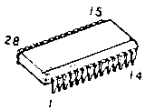

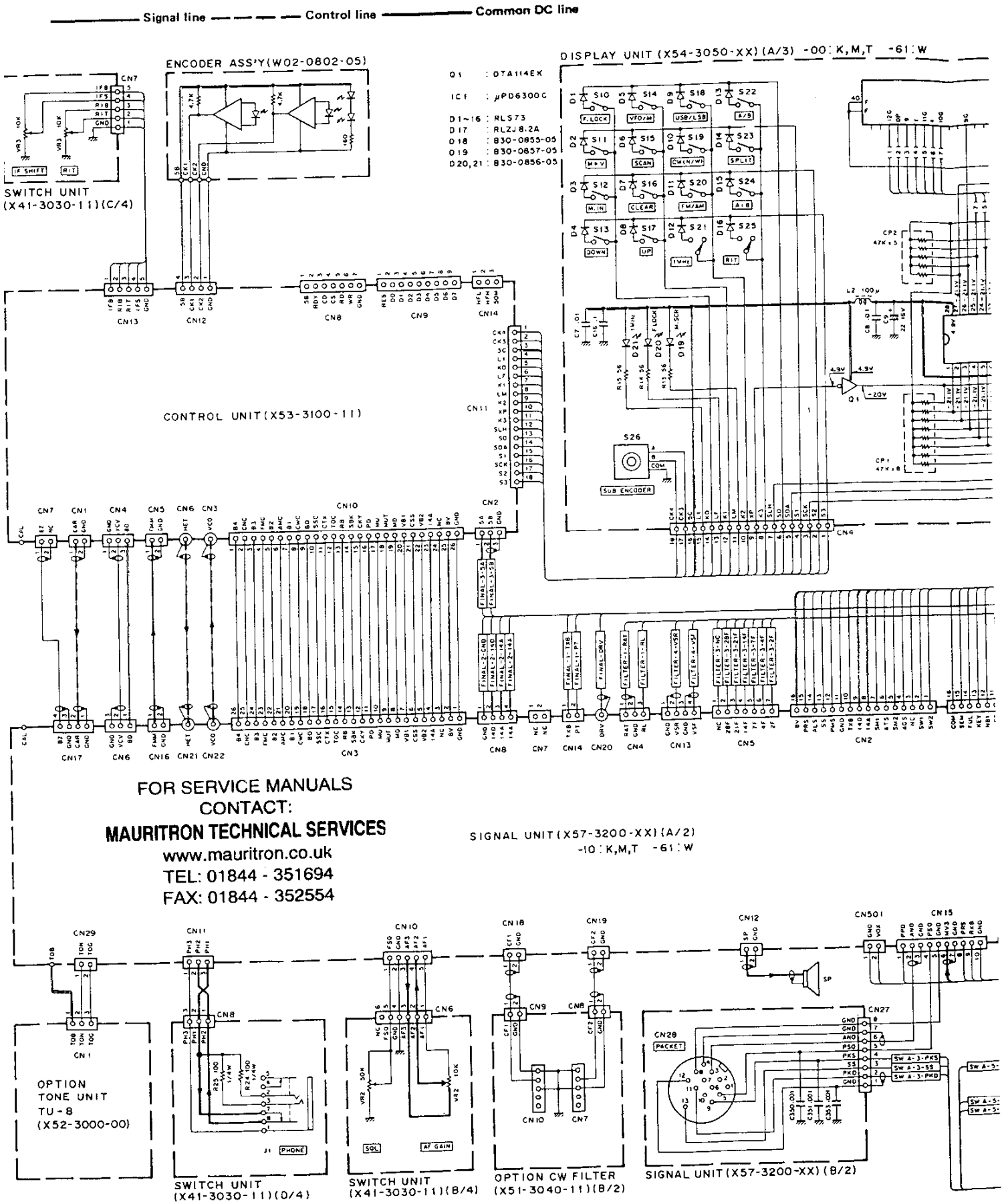

FOR SERVICE MANUALS
CONTACT:
MAURITRON TECHNICAL SERVICES
www.mauritron.co.uk
TEL: 01844 - 351694
FAX: 01844 - 352554

SCHEMATIC DIAGRAM (TS-1

DC line

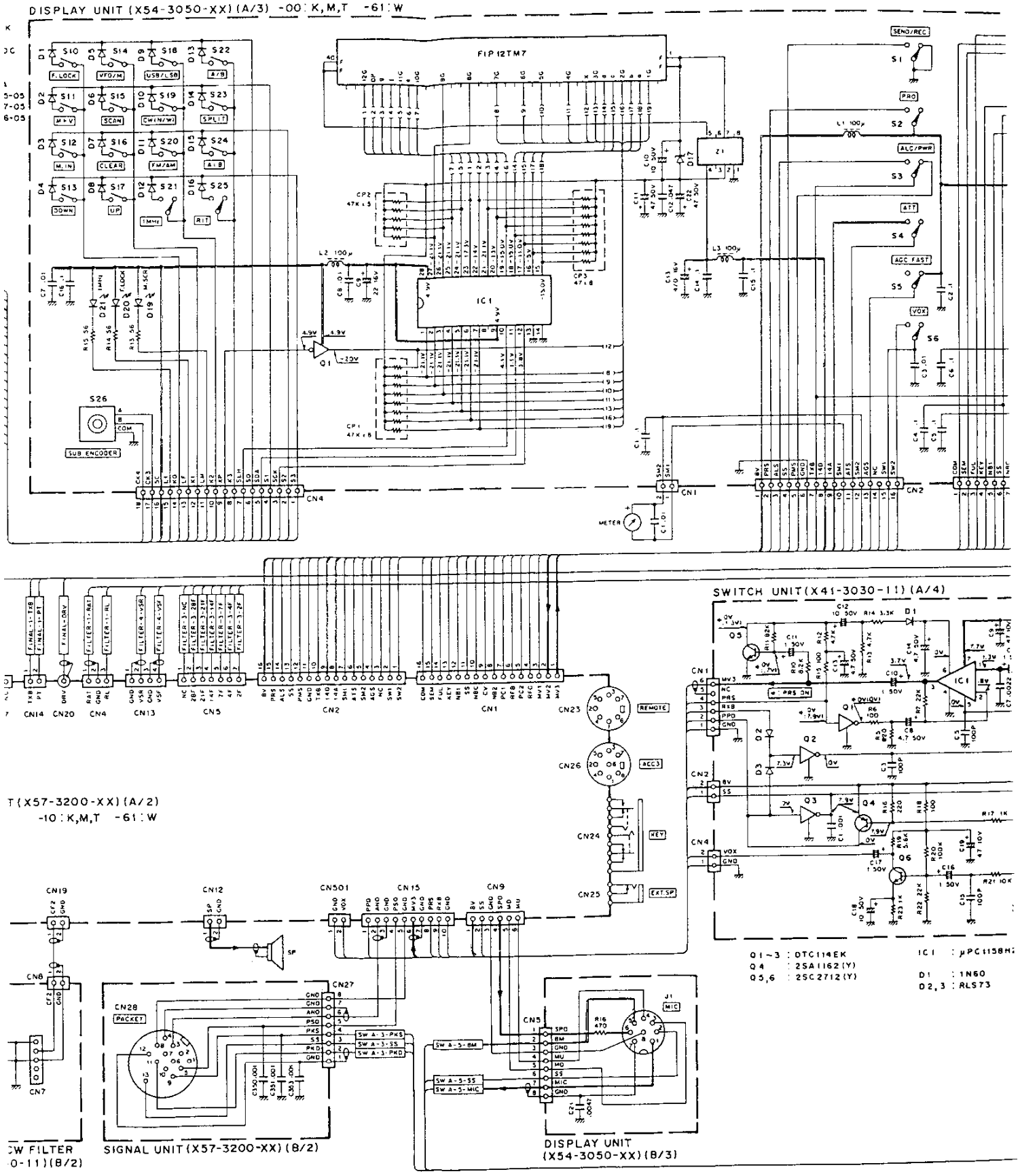

SCHEMATIC DIAGRAM (TS-140S)

Voltage measu

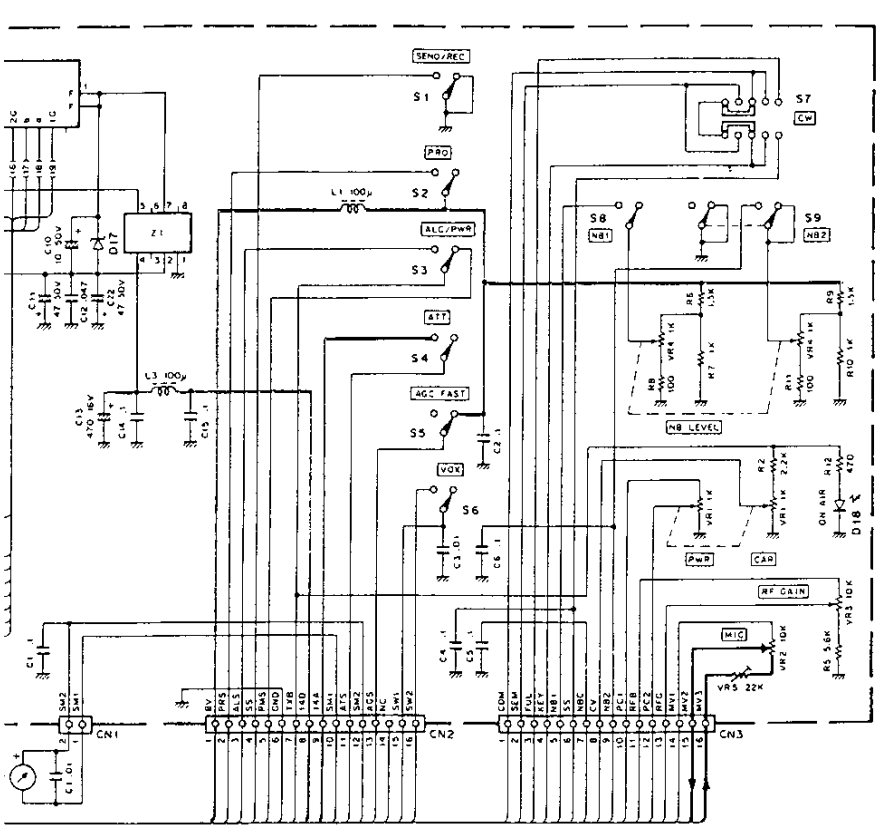

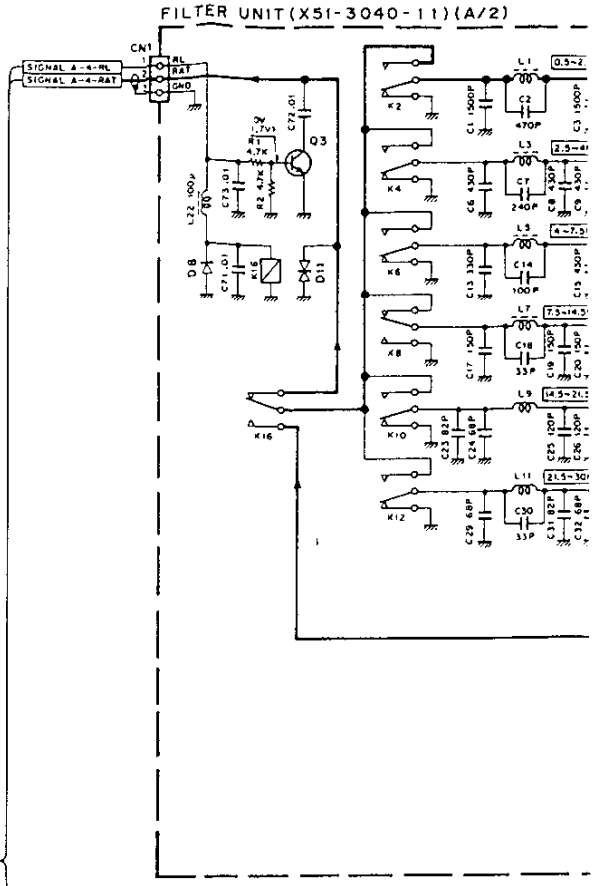

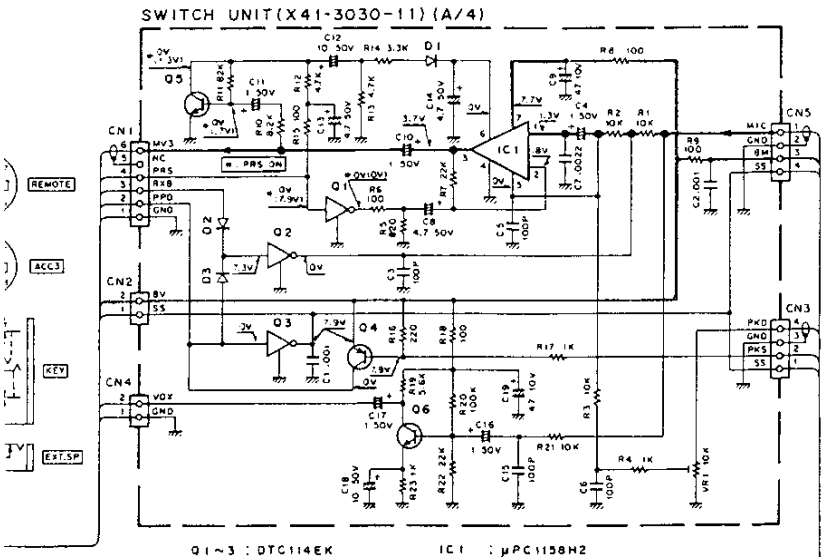

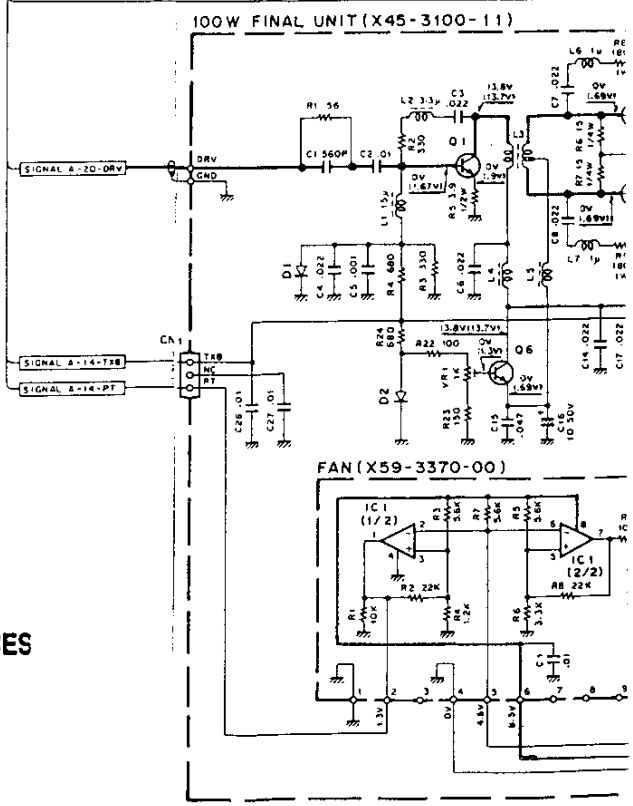

Q1~3 : DTC114EK
Q4 : 2SA1162(Y)
Q5,6 : 2SC2712(Y)

IC1 : μPC1158H2

D1 : 1N60
D2,3 : RLS73

FOR SERVICE MANUALS
CONTACT:
MAURITRON TECHNICAL SERVICES
www.mauritron.co.uk
TEL: 01844 - 351694
FAX: 01844 - 352554

X) (B/3)

Voltage measurement condition f= 14MHz. SSB MIC GAIN MIN.
Mode : USB. ( ) : TX.

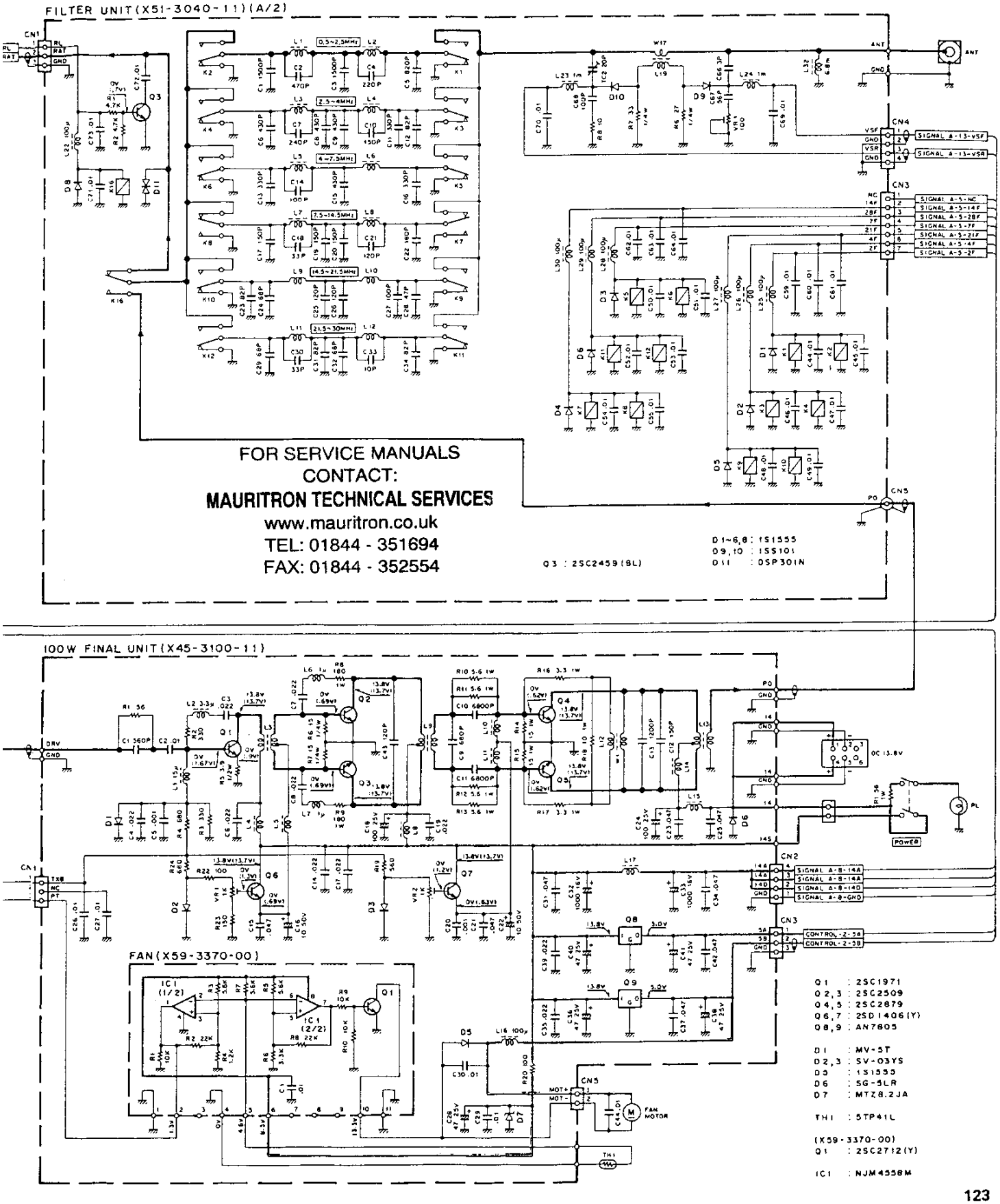

Signal line — Control line — Common DC line

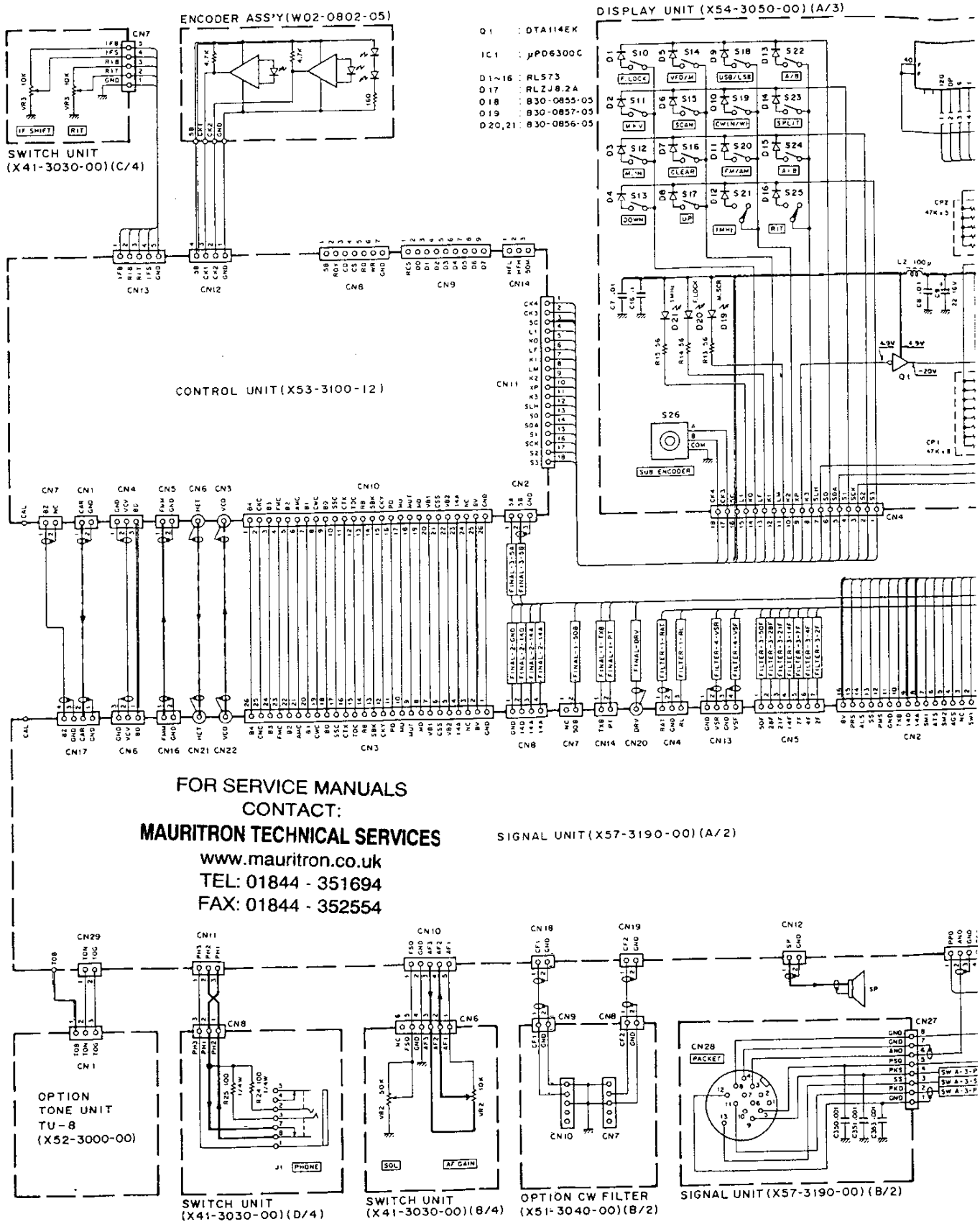

FOR SERVICE MANUALS
CONTACT:
MAURITRON TECHNICAL SERVICES
www.mauritron.co.uk
TEL: 01844 - 351694
FAX: 01844 - 352554

SCHEMATIC DIAG

Signal line — Control line — Common DC line

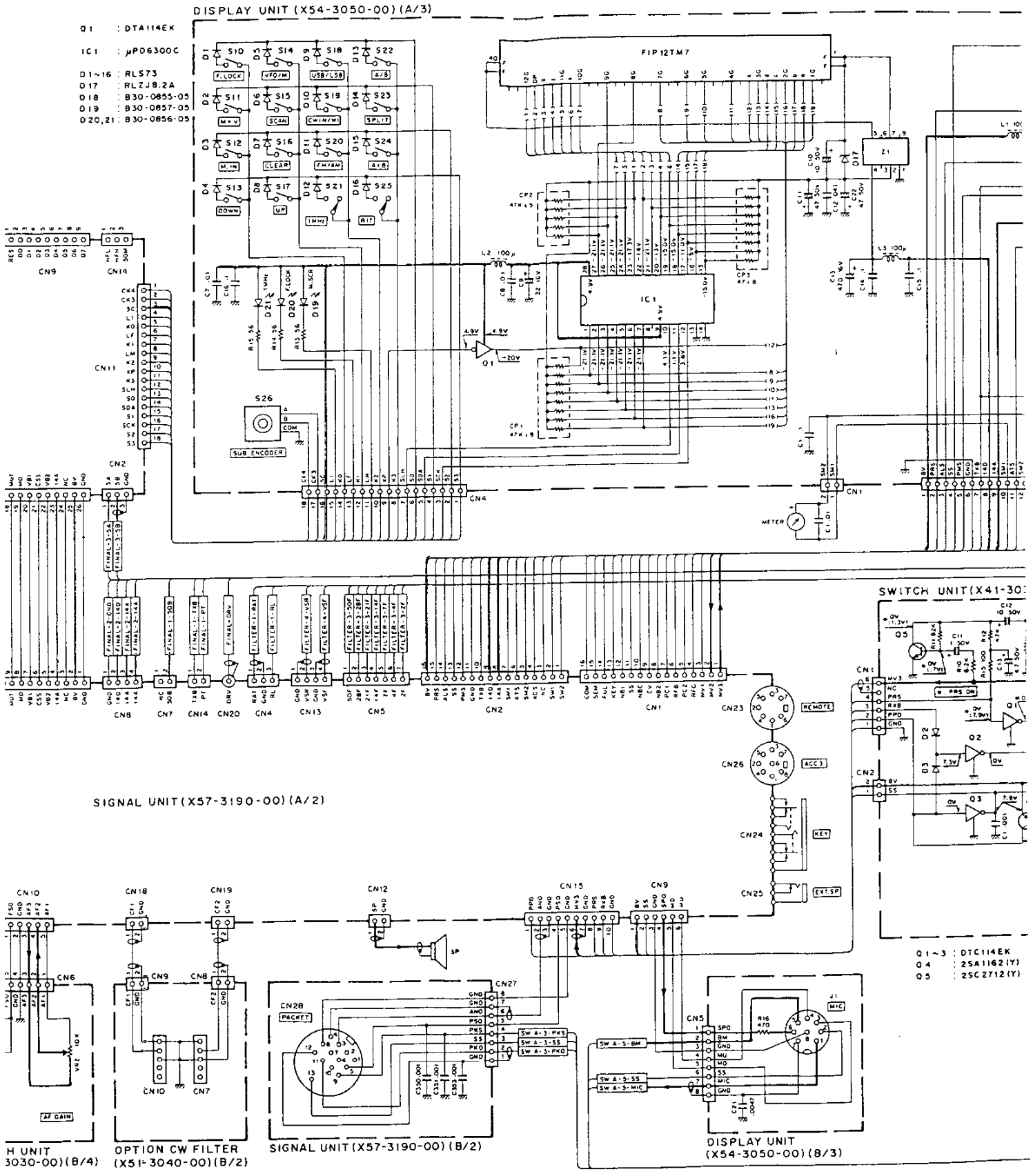

SCHEMATIC DIAGRAM (TS-680S)

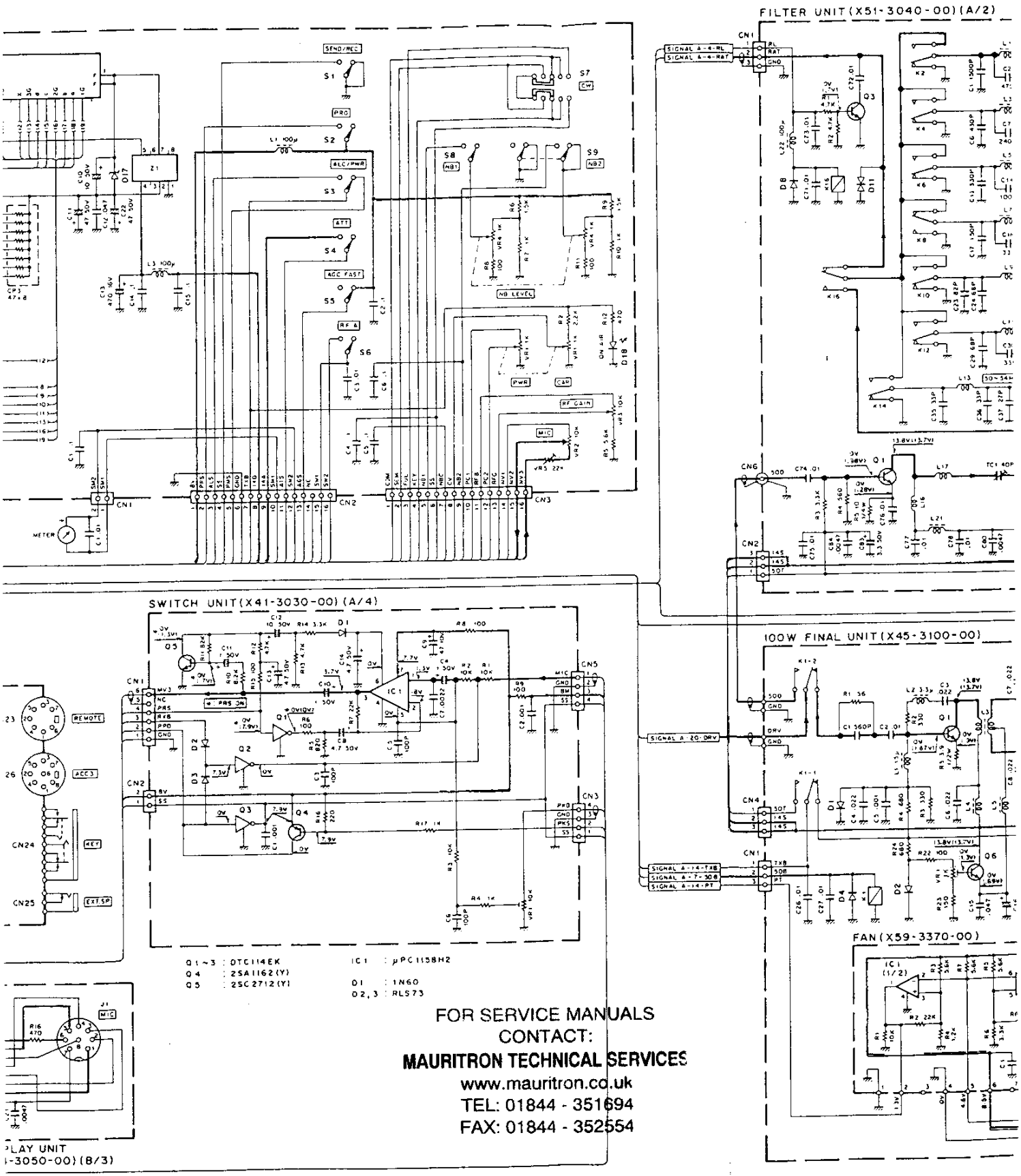

FOR SERVICE MANUALS
CONTACT:
MAURITRON TECHNICAL SERVICES
www.mauritron.co.uk
TEL: 01844 - 351694
FAX: 01844 - 352554

Voltage measurement condition FILTER UNIT : f=52MHz. FINAL UNIT : f=14MHz. SSB MIC GAIN.
SWITCH UNIT, DISPLAY UNIT : f=14MHz, Mode : USB. ( ) : TX.

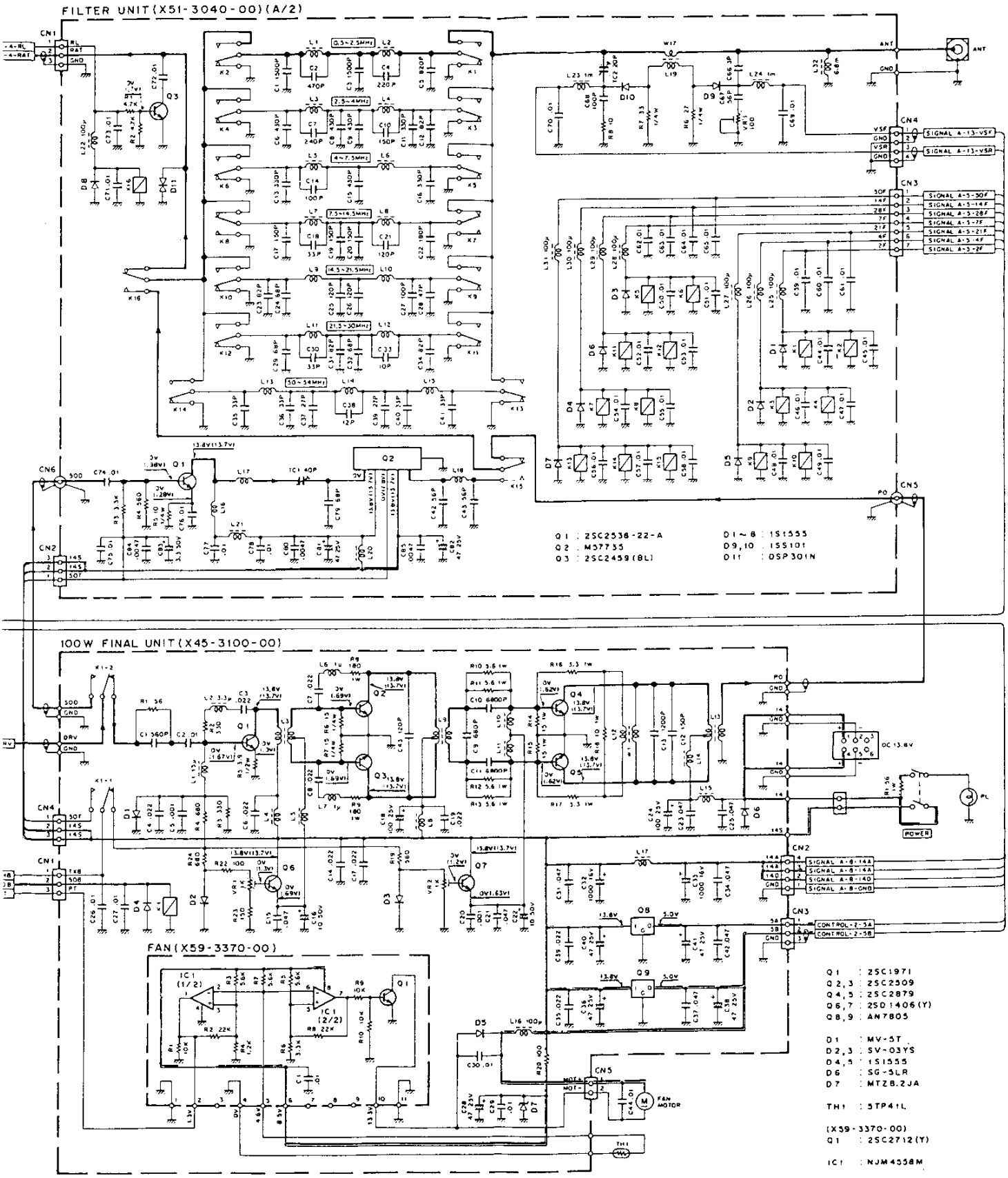

TK-455C-1 (CW FILTER)

YK-455C-1 EXTERNAL VIEW

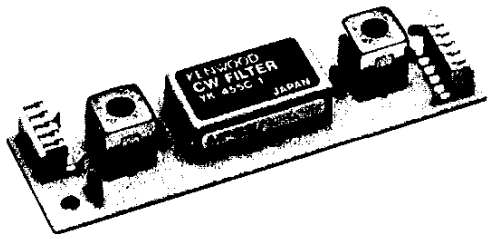

YK-455C-1 ELECTRICAL CHARACTERISTICS

Item	Rating
Nominal center frequency (fo)	455kHz
Center frequency declination	Within fo ± 0.1kHz at 6dB
6dB pass bandwidth	fo ± 0.25kHz or more
60dB attenuation bandwidth	fo ± 1.1kHz or less
Ripple	3dB or less at within fo ± 0.2kHz
Insertion loss	8dB or less
Spurious attenuation	70dB or more at within fo ± 60kHz
I/O terminating impedance	2kΩ ± 5%

FOR SERVICE MANUALS
CONTACT:
MAURITRON TECHNICAL SERVICES
www.mauritron.co.uk
TEL: 01844 - 351694
FAX: 01844 - 352554

TU-8 (TONE UNIT)

TU-8 EXTERNAL VIEW

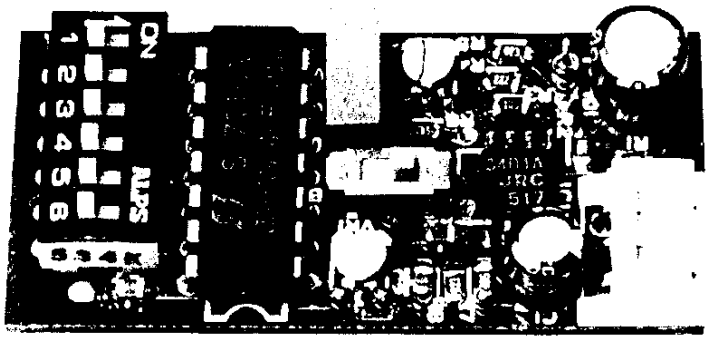

TU-8 SPECIFICATIONS

Frequency range	38CH in 67.0–250.3Hz and 1750Hz, 1800Hz
Frequency Deviation	Within ±0.5%
Max. Output Power	2.0Vrms±5% at 1800Hz/1.5kΩ
Operating temperature	−20°C to +60°C
Power Supply Voltage	8V±5%
Semi-conductors	ICs : 2 Diode : 1
Weight	Approx. 10 grams
Dimensions	45 mm W 22 mm D 8 mm H (without cushion, etc.)

FOR SERVICE MANUALS
CONTACT:
MAURITRON TECHNICAL SERVICES
www.mauritron.co.uk
TEL: 01844 - 351694
FAX: 01844 - 352554

TU-8 (TONE UNIT)

TU-8 CIRCUIT DISCRIPTION

The TU-8 is a tone unit designed for the repeater operation of the TS-140S/680S.

- **Outline**

1. A six position DIP switch (Fig. 1) has been provided to allow selection of the desired tone frequency, 40 different frequencies are available (See Table 1.).
   Use the DIP switch and Table 1 to select the desired tone frequency.

Freq. (Hz)	P1	P2	P3	P4	P5	P6	Freq. (Hz)	P1	P2	P3	P4	P5	P6
67.0	1	0	0	0	0	0	136.5	1	0	1	0	1	0
71.9	0	1	0	0	0	0	141.3	0	1	1	0	1	0
74.4	1	1	0	0	0	0	146.2	1	1	1	0	1	0
77.0	0	0	1	0	0	0	151.4	0	0	0	1	1	0
79.7	1	0	1	0	0	0	156.7	1	0	0	1	1	0
82.5	0	1	1	0	0	0	162.2	0	1	0	1	1	0
85.4	1	1	1	0	0	0	167.9	1	1	0	1	1	0
88.5	0	0	0	1	0	0	173.8	0	0	1	1	1	0
91.5	1	0	0	1	0	0	179.9	1	0	1	1	1	0
94.8	0	1	0	1	0	0	186.2	0	1	1	1	1	0
97.4	1	1	0	1	0	0	192.8	1	1	1	1	1	0
100.0	0	0	1	1	0	0	203.5	0	0	0	0	0	1
103.5	1	0	1	1	0	0	210.7	1	0	0	0	0	1
107.2	0	1	1	1	0	0	218.1	0	1	0	0	0	1
110.9	1	1	1	1	0	0	225.7	1	1	0	0	0	1
114.8	0	0	0	0	1	0	233.6	0	0	1	0	0	1
118.8	1	0	0	0	1	0	241.8	1	0	1	0	0	1
123.0	0	1	0	0	1	0	250.3	0	1	1	0	0	1
127.3	1	1	0	0	1	0	1750.0	1	1	1	1	0	1
131.8	0	0	1	0	1	0	1800.0	0	0	0	0	1	1

(1 : ON 0 : OFF)

Table 1 Program

Ex.) 88.5Hz switch position

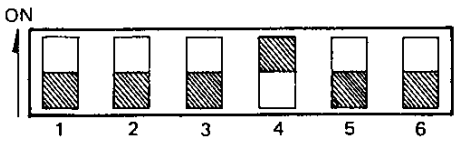

Fig. 1 DIP Switch

TU-8 ADJUSTMENT

- **Deviation adjustment**

The TU-8 has been present at factory for ±600Hz. The deviation is adjusted by with VR1 to Max. ±2kHz with the deviation potentiometer full clockwise when the TU-8 is installed on the TS-140S/680S.

*1 *2
2. Tone-burst or continuoustone selection :
   A switch is provided to allow selection of either the tone-burst or continuous tone mode.
   The burst duration can be adjusted by with VR2.

*1 Tone-burst mode :
A tone will be generated for a brief period at the beginning of each transmission.

*2 Continuous-tone mode :
A tone will be generated as long as the PTT switch is depressed. Since the tone is adjsted for a sub-audible level, this should not interfere with normal communications.

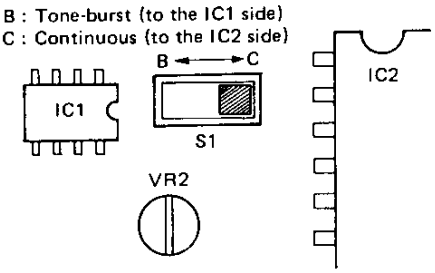

Fig. 2 Tone-burst or continuous-tone selection switch

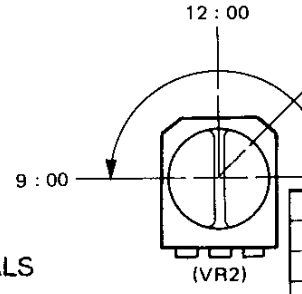

CW	TIME
9 : 00	Approx. 0.5 sec.
12 : 00	Approx. 2 sec.
13 : 30	Approx. 3.5 sec.
15 : 00	Continuous-tone

Table 2

Fig. 3 Burst time adjustment

FOR SERVICE MANUALS
CONTACT:
MAURITRON TECHNICAL SERVICES
www.mauritron.co.uk
TEL: 01844 - 351694
FAX: 01844 - 352554

TU-8 (TONE UNIT)

* New Parts
Parts without Parts No. are not supplied.
Les articles non mentionnes dans le Parts No. ne sont pas fournis.
Teile ohne Parts No. werden nicht geliefert.

TU-8 PARTS LIST

Ref. No. 参照番号	Address 位置	New Parts 新	Parts No. 部品番号	Description 部品名／規格	Destination 仕向	Remarks 備考
TU-8						
-		*	X52-3000-00	TONE UNIT		
TONE UNIT (X52-3000-00)						
C1			CE04CW1A220M	ELECTRO 22UF 10WV		
C2 -4			CK73FB1E103K	CHIP C 0.010UF K		
C5			CE04CW1A470M	ELECTRO 47UF 10WV		
C6			CC45SL1H102J	CERAMIC 1000PF J		
L1			L40-2211-17	SMALL FIXED INDUCTOR		
X1			L78-0018-05	CERAMIC OSCILLATOR (3.58MHZ)		
R1 ,2			RK73FB2A105J	CHIP R 1.0M J 1/10W		
R3			RK73FB2A103J	CHIP R 10K J 1/10W		
R4			RK73FB2A222J	CHIP R 2.2K J 1/10W		
R5			RK73FB2A473J	CHIP R 47K J 1/10W		
R6			RK73FB2A682J	CHIP R 6.8K J 1/10W		
R7			RK73FB2A105J	CHIP R 1.0M J 1/10W		
R8			RK73FB2A823J	CHIP R 82K J 1/10W		
VR1 ,2		*	R12-4418-05	TRIMMING POT (50K)		
S1			S31-1411-05	SLIDE SWITCH (3P)		
S2		*	S59-6401-05	DIP SWITCH (SSGM16 6P)		
D1			1SS133	DIODE		
IC1		*	NJM3404AM	IC(OP AMP X2)		
IC2			S7116A	IC(TONE ENCODER)		

FOR SERVICE MANUALS
CONTACT:
MAURITRON TECHNICAL SERVICES
www.mauritron.co.uk
TEL: 01844 - 351694
FAX: 01844 - 352554

TU-8 (TONE UNIT)

TU-8 PC BOARD VIEW

TONE UNIT (X52-3000-00) Component side view

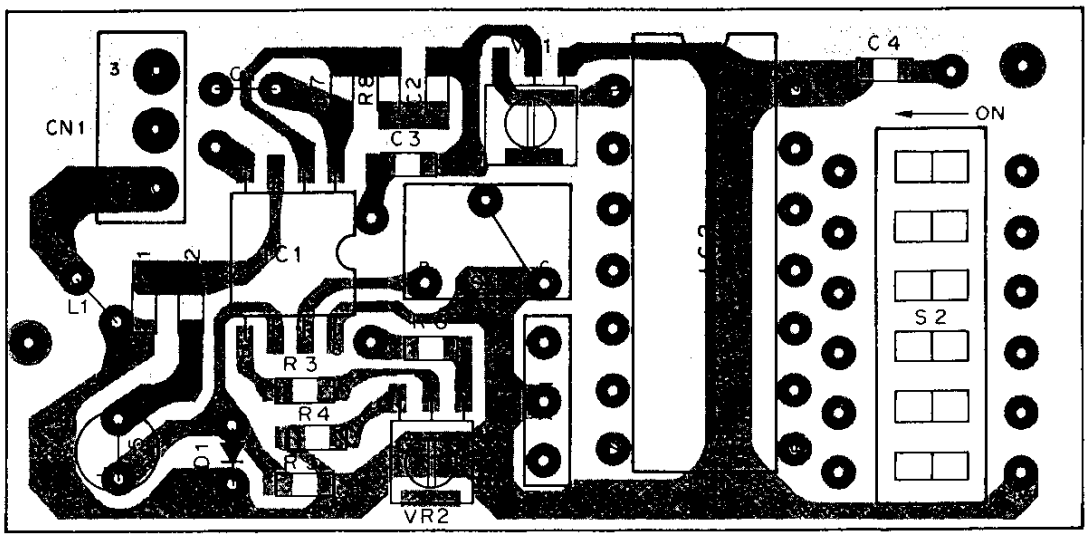

NJM3404AM

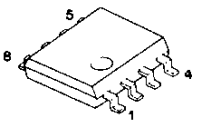

S7116A

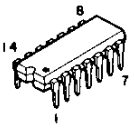

TU-8 SCHEMATIC DIAGRAM

TONE UNIT (X52-3000-00)

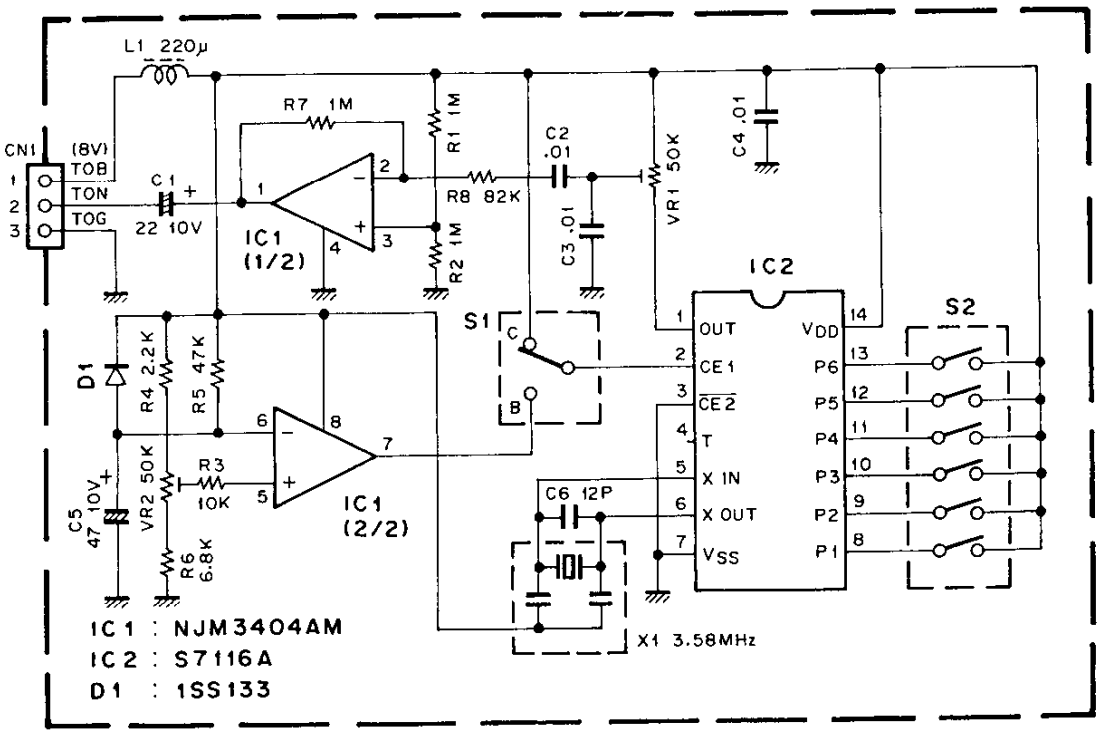

IF-10C (INTERFACE KIT)

IF-10C EXTERNAL VIEW

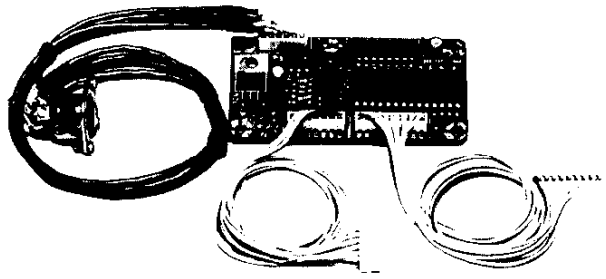

IF-10C SPECIFICATIONS

Power requirement		DC 5.0V (4.5 ~ 5.5V)
Current drain		100mA
Interface signal level		
Output signal	"L" level	0 ~ 0.4V
	"H" level	2.4 ~ 5V
Input signal	"L" level	0 ~ 0.8V
	"H" level	2 ~ 5V
Operating temperature		−10°C ~ +50°C

IF-10C PARTS LIST

* : New Parts
Parts without Parts No. are not supplied.

Ref. No.	Address	New Parts	Parts No.	Description	Destination	Remarks
IF-10C						
			B42-3317-04	Serial plate		
		*	B42-3319-04	Plate	K	
			CK45F1H103Z	C 0.01μF Z (DIN)		
			E06-0655-05	6P DIN Connector		
		*	E31-3331-05	Connector with lead (DIN)		
		*	E31-3333-05	Connector with lead 7P		
		*	E31-3334-05	Connector with lead 9P		
		*	H13-0804-04	Protection plate		
		*	H25-0711-04	Antistatic bag		
		*	H25-0712-04	Antistatic bag (PC board)		
			J61-0307-05	Wire band		
			N30-2605-41	Pan head screw M2.6 x 5 (DIN)		
			N87-2606-46	Brazier head taptite screw φ2.6 x 6		
		*	X57-1160-02	Interface unit		
INTERFACE UNIT (X57-1160-02)						
C3			CE04CW0J470M	Electro 47μF 6.3WV		
C4, 5			C91-0117-05	C 0.01μF		
C6			CE04CW0J470M	Electro 47μF 6.3WV		
C7			C91-0117-05	C 0.01μF		
C8, 9			CK45B1H102K	C 1000pF K		
C10 - 15			C91-0117-05	C 0.01μF		
L1, 2			L40-1011-16	Ferri-inductor 100μH		
X1		*	L78-0015-05	Ceramic resonator CSA2.45MG11		
R2			RD14BB2C103J	RD 10K J		
R3, 4			RD14BB2C101J	RD 100 J		
R5			RD14BB2C222J	RD 2.2K J		
R6			RD14BB2C472J	RD 4.7K J		
R7		*	R90-0597-05	Resistor block 1K x 4		
JP1, 3			R92-1061-05	Jumper wire		
IC1		*	μPD8251AFC	IC		
IC2			TC4040BP	IC		
IC3		*	HD7404P	IC		

FOR SERVICE MANUALS
CONTACT:
MAURITRON TECHNICAL SERVICES
www.mauritron.co.uk
TEL: 01844 - 351694
FAX: 01844 - 352554

IF-10C (INTERFACE KIT)

IF-10C PC BOARD VIEW

INTERFACE UNIT (X57-1160-02)

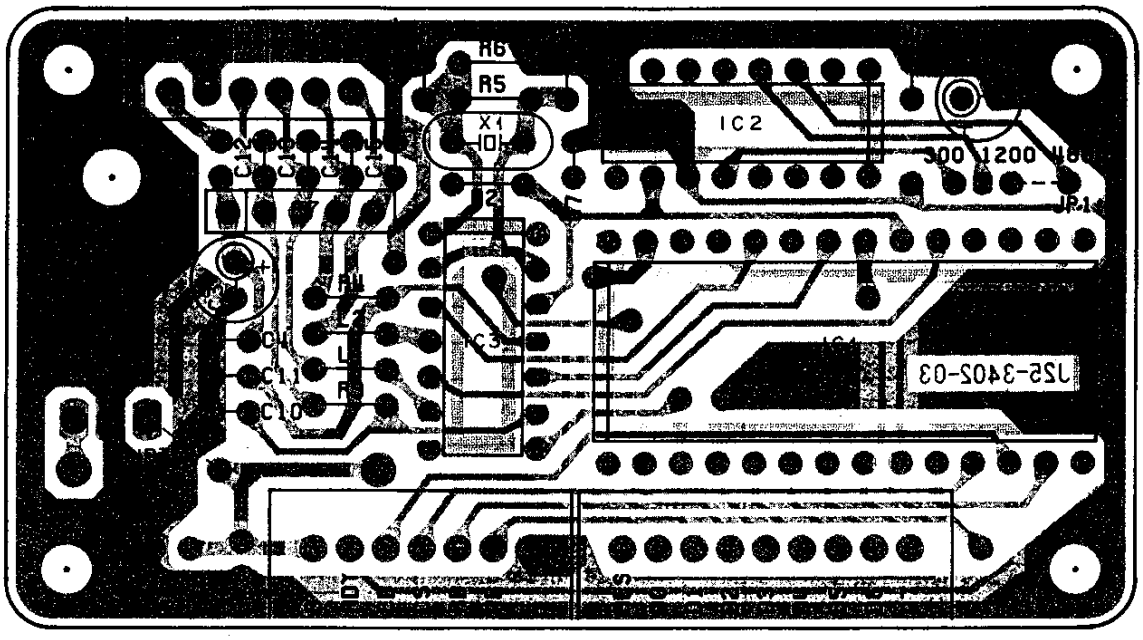

IF-10C SCHEMATIC DIAGRAM

INTERFACE UNIT (X57-1160-02)

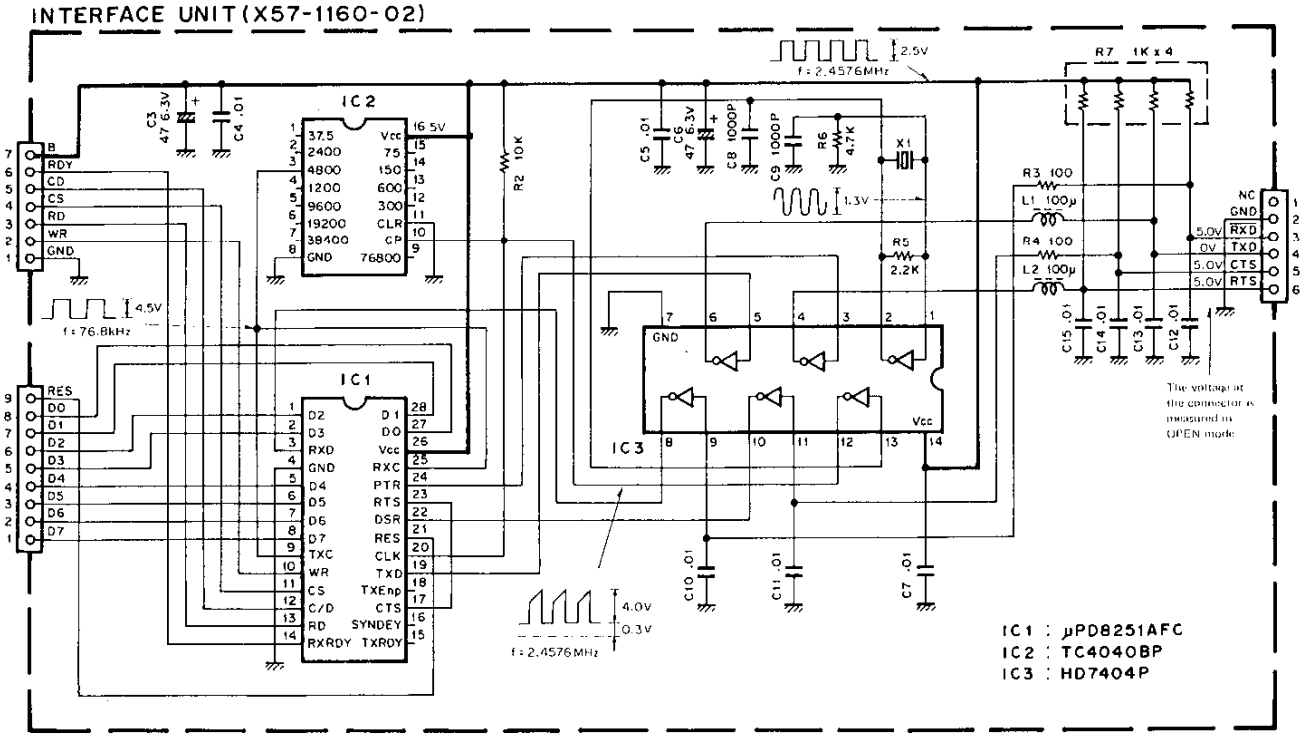

SPECIFICATIONS

Specifications \ Model				TS-140S	TS-680S
General	Mode			J3E (LSB, USB), A1A (CW), A3E (AM), F3E (FM)	
	Antenna impedance			50 ohms	
	Power requirement			12 to 16 VDC (13.8 VDC reference)	
	Grounding			Negative	
	Current drain		Receive mode with no input signal	1.5 A	
			Transmit mode	20 A	
	Operating temperature			−10 to +50°C (+14 to +122°F)	
	Frequency stability			Less than ±10 PPM	
	Frequency accuracy			Less than ±10 PPM	
	Dimensions (W×H×D) (Projections included)			281×107×305 mm (11-1/16"×4-7/32"×12")	
	Weight			6.1 kg (13.4 lbs)	
Transmitter	Frequency range		160 m band	1.8 to 2.0 MHz	
			80 m band	3.5 to 4.0 MHz	
			40 m band	7.0 to 7.3 MHz	
			30 m band	10.1 to 10.15 MHz	
			20 m band	14.0 to 14.35 MHz	
			17 m band	18.068 to 18.168 MHz	
			15 m band	21.0 to 21.45 MHz	
			12 m band	24.89 to 24.99 MHz	
			10 m band	28.0 to 29.7 MHz	
			6 m band	———	50.0 to 54.0 MHz
	Output power	160 m band – 15 m band	SSB	110 W *1	100 W *1
			CW	100 W *1	
			AM	40 W *1	
		12 m band	SSB · CW	100 W	
			AM	40 W	
		10 m band	SSB	100 W	95 W
			CW	95 W	
			FM	50 W	
			AM	40 W	
		6 m band	SSB · CW · FM	———	10 W
			AM	———	4 W
	Modulation		LSB, USB	Balanced modulation	
			FM	Reactance modulation	
			AM	Low level modulation	
	Spurious radiation (CW)		1.9 MHz to 29.7 MHz	Less than −40 dB	
			50 MHz to 54 MHz	———	Less than −60 dB
	Carrier suppression			More than 40 dB (with 1.5 kHz reference)	
	Unwanted sideband suppression			More than 50 dB (with 1.5 kHz reference)	
	Maximum frequency deviation (FM)			±5 kHz	
	Frequency response (−6 dB)			400 to 2600 Hz	
	Microphone impedance			500 ohms to 50 kΩ	

FOR SERVICE MANUALS
CONTACT:
MAURITRON TECHNICAL SERVICES
www.mauritron.co.uk
TEL: 01844 - 351694
FAX: 01844 - 352554

SPECIFICATIONS

Specifications \ Model				TS-140S	TS-680S
Receiver	Circuitry			Double conversion superheterodyne	
	Frequency range			500 kHz to 30 MHz	500 kHz to 30 MHz 50 MHz to 54 MHz
	Intermediate frequency			1st: 40.055 MHz, 2nd: 455 kHz	
	Sensitivity	LSB, USB, CW (at 10 dB S+N/N)	500 kHz to 1.62 MHz	Less than 3.98 μV	
			1.62 MHz to 21.5 MHz	Less than 0.25 μV	
			21.5 MHz to 30 MHz	Less than 0.25 μV	Less than 0.18 μV *2
			50 MHz to 54 MHz	———	Less than 0.16 μV *2
		AM (at 10 dB S+N/N)	500 kHz to 1.62 MHz	Less than 39.8 μV	
			1.62 MHz to 21.5 MHz	Less than 2.5 μV	
			21.5 MHz to 30 MHz	Less than 2.5 μV	Less than 1.78 μV *2
			50 MHz to 54 MHz	———	Less than 1.58 μV *2
		FM (at 12 dB SINAD)	21.5 MHz to 30 MHz	Less than 0.35 μV	Less than 0.18 μV *2
			50 MHz to 54 MHz	———	Less than 0.18 μV *2
	Selectivity		LSB, USB, CW	−6 dB: 2.2 kHz, −60 dB: 4.4 kHz	
			AM	−6 dB: 6 kHz, −50 dB: 18 kHz	
			FM	−6 dB: 12 kHz, −50 dB: 25 kHz	
	Image ratio			More than 50 dB	
	1st IF rejection			More than 50 dB	
	IF SHIFT variable range			More than ±1.2 kHz	
	RIT variable range		10 Hz STEP	More than ±1.2 kHz	
			20 Hz STEP	More than ±2.5 kHz	
	Squelch sensitivity (FM)			Less than 0.32 μV	
	Output			1.5 W across 8 ohms load (10% distortion)	
	Output load impedance			8 ~ 16 ohms	

Notes:
1. *1: The output power on the 160 m band is limitted to 10 W depending on local regulations.
2. *2: This is valuable when the RF AMP switch is turned ON.
3. Circuit and ratings are subject to change without notice due to advancements in technology.

FOR SERVICE MANUALS
CONTACT:
MAURITRON TECHNICAL SERVICES
www.mauritron.co.uk
TEL: 01844 351694
FAX: 01844 352554

ACCESSORIES

Unpack your TS-140S/680S carefully and check that it is supplied with the following accessories.

Dynamic microphone (Except European and U.K. version)	T91-0352-05	1 ea.
DIN plug (7-pin)	E07-0751-05	1 ea.
DIN plug (13-pin)	E07-1351-05	1 ea.
DC power cable assembly	E30-2065-05	1 ea.
Calibration cable	E31-2154-05	1 ea.
Fuse (20A)	F05-2036-05	1 ea.
Instruction manual	B50-8199-XX	1 copy
Warranty card (U.S.A. only)		1 ea.

After unpacking
Shipping container:
Save the boxes and packing in the event your unit needs to be transported for remote operation, maintenance, or service.

5-6. BLOCK DIAGRAM

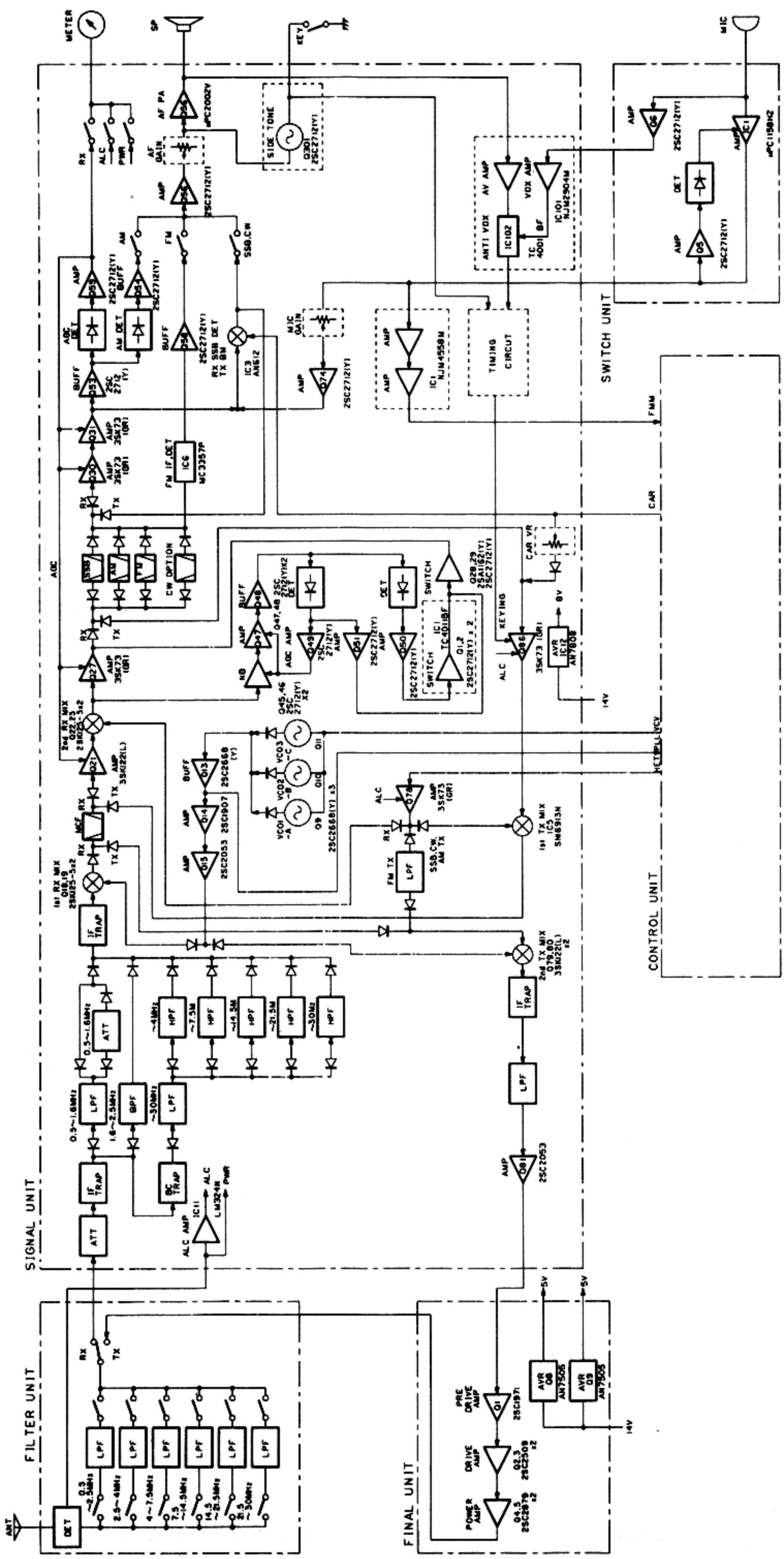

downloaded by
Amateur Radio Directory
www.hamdirectory.info

Note: Block Diagram is subject to change wit

5-5. CIRCUIT DIAGRAM

■ SCHEMATIC DIAGRAM

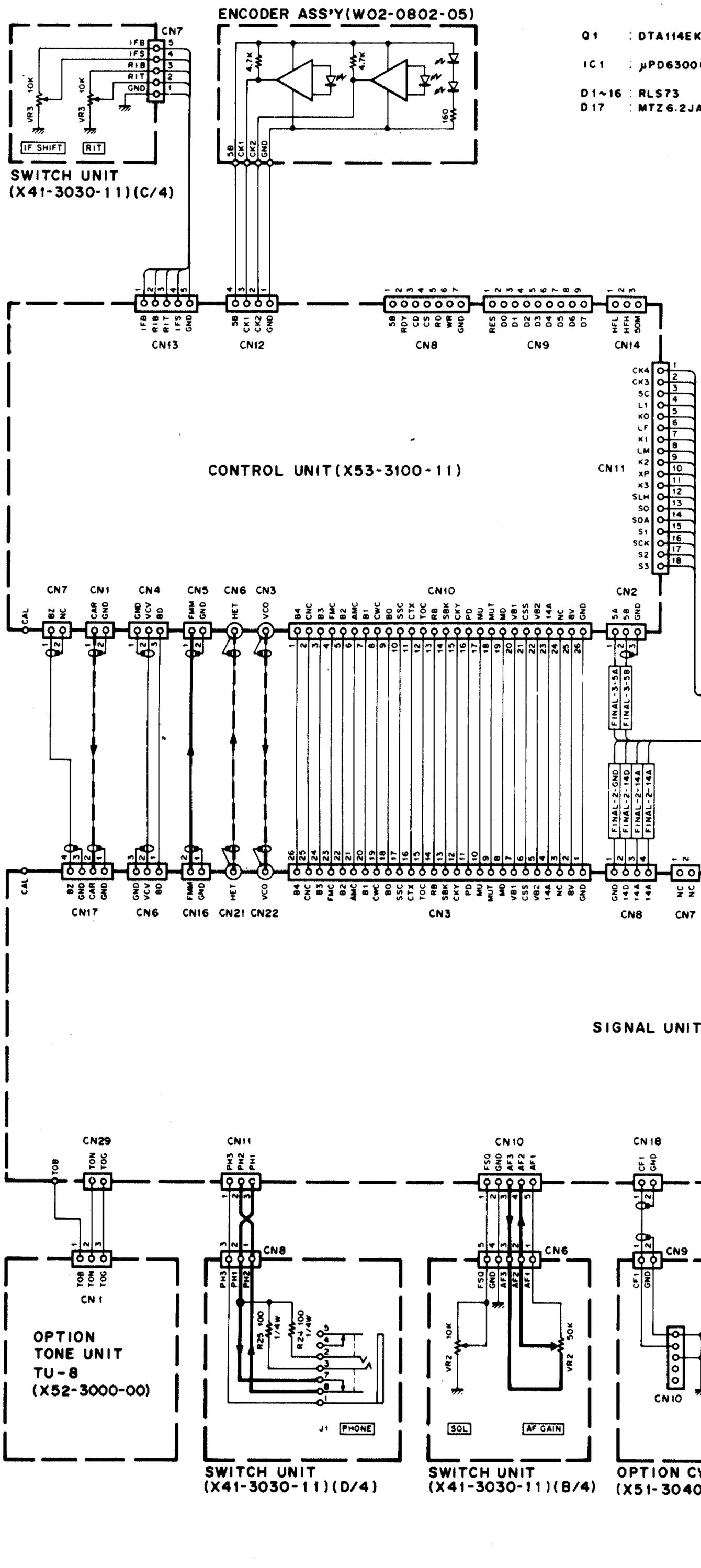

FIP12TM7

IC1

CP3 47x8

SEND/REC S1 · PRO S2 · ALC/PWR S3 · ATT S4 · AGC FAST S5 · RF.A VOX S6 · S7 CW · S8 NB1 · S9 NB2

L1 100μ · L3 100μ · L22 100μ

Z1 · D17 · D8 · K16

NB LEVEL · PWR · CAR · ON AIR D18 · RF GAIN · MIC · VR5 22K

METER

CN1 · CN2 · CN3

SIGNAL A-4-RL · SIGNAL A-4-RAT

FILTER UNIT(X

CN1 · CN23 · CN26 · ACC3 · CN24 · KEY · CN25 · EXT.SP · CN9

SWITCH UNIT(X41-3030-11)(A/4)

IC1 · Q1~3 : DTC114EK · Q4 : 2SA1162(Y) · Q5,6 : 2SC2712(Y) · D1 : 1N60 · D2,3 : RLS73 · IC1 : μPC1158H2

CN1 · CN2 · CN3 · CN4 · CN5

DISPLAY UNIT (X54-3050-00)(B/2)

J1 MIC · CN5 · R16 470 · C1 .001

100W FINAL UN

SIGNAL A-20-DRV · SIGNAL A-14-TXB · SIGNAL A-14-PT · CN1

FILTER UNIT (X51-3040-11) (A/2)

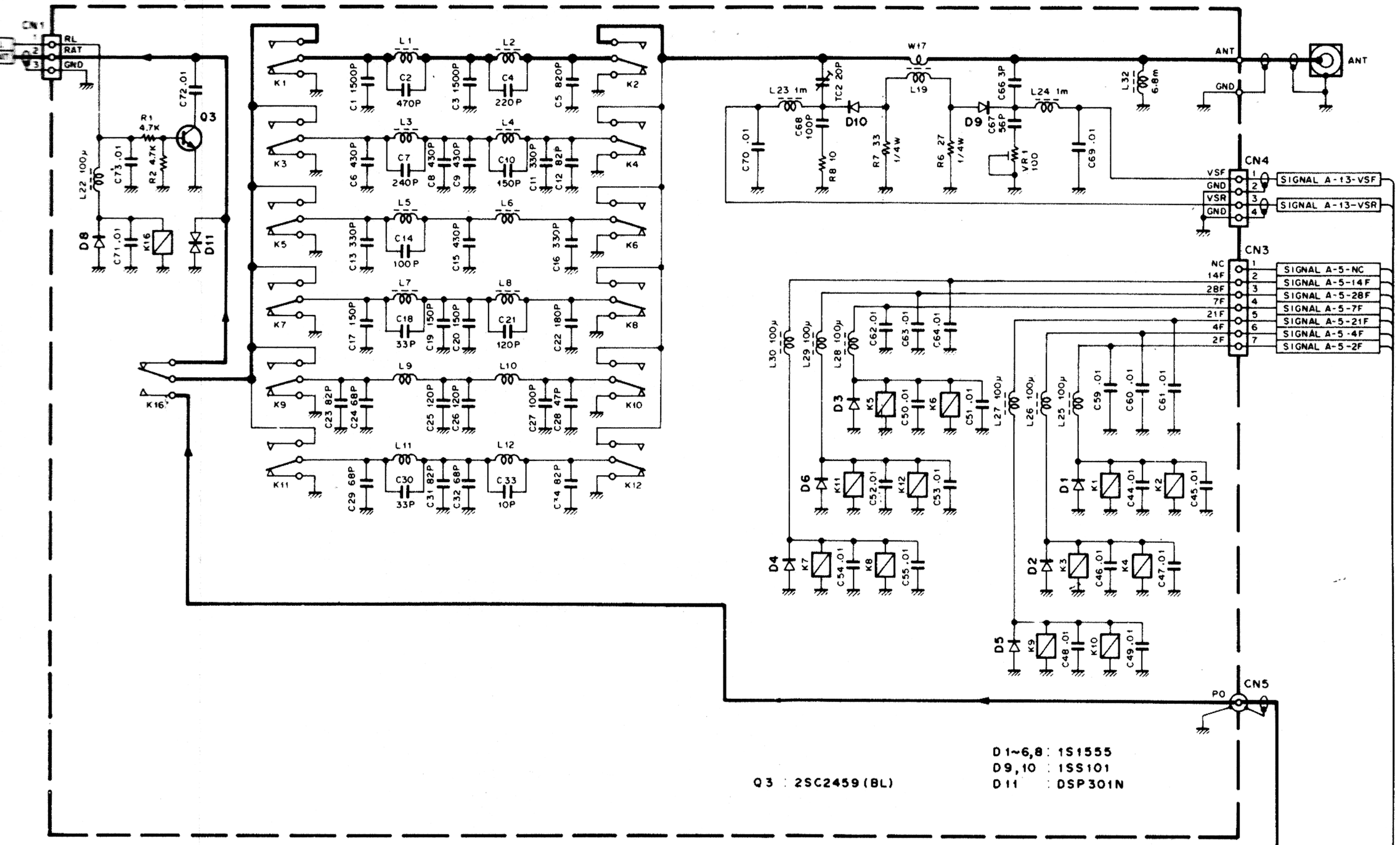

D1~6,8 : 1S1555
D9,10 : 1SS101
D11 : DSP301N

Q3 : 2SC2459(BL)

100W FINAL UNIT (X45-3100-11)

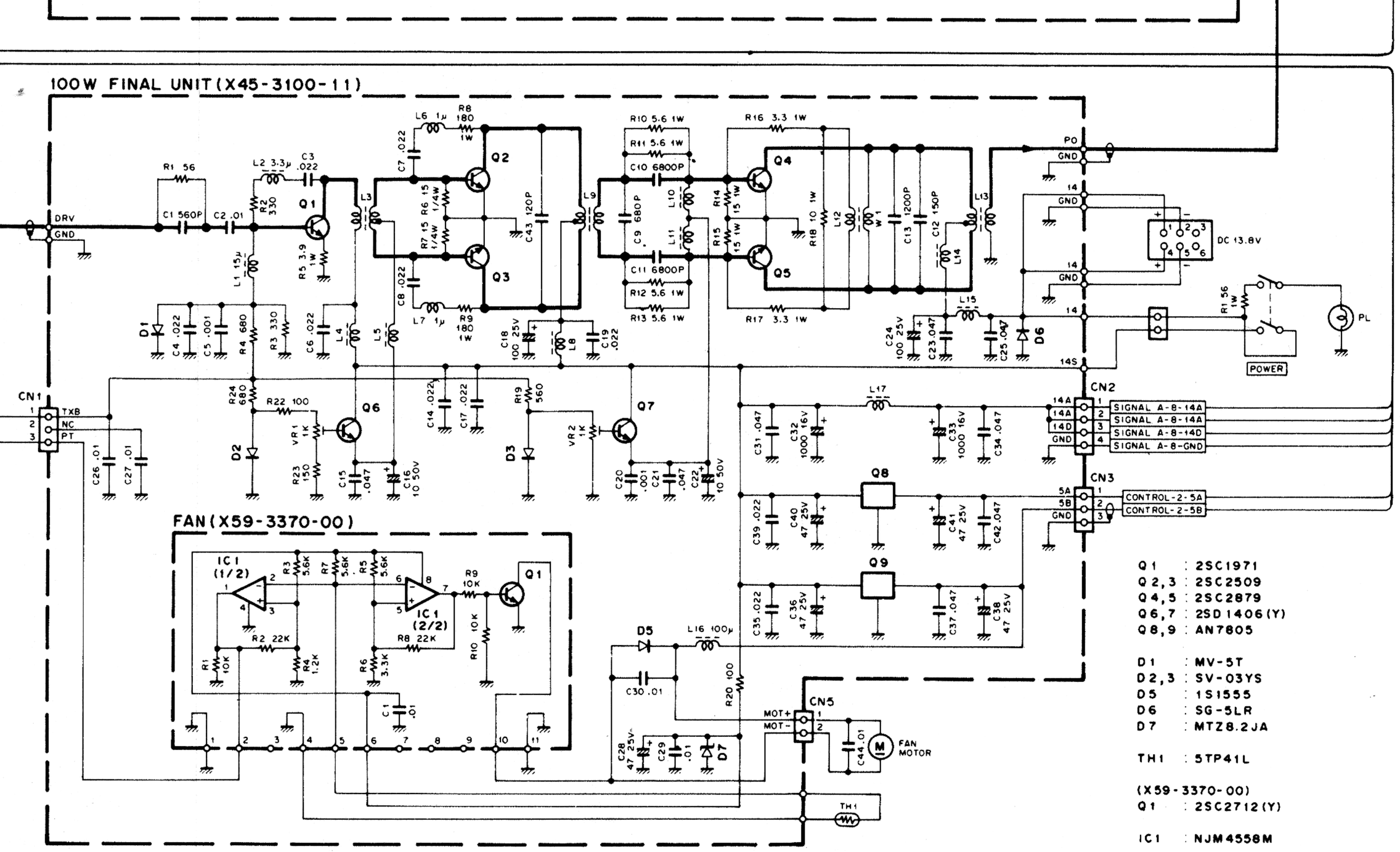

Q1 : 2SC1971
Q2,3 : 2SC2509
Q4,5 : 2SC2879
Q6,7 : 2SD1406(Y)
Q8,9 : AN7805

D1 : MV-5T
D2,3 : SV-03YS
D5 : 1S1555
D6 : SG-5LR
D7 : MTZ8.2JA

TH1 : 5TP41L

FAN (X59-3370-00)

(X59-3370-00)
Q1 : 2SC2712(Y)

IC1 : NJM4558M

Note:

Circuit Diagram is subject to change without notice due to advancements in technology.

■ SIGNAL UNIT (X57-3200-10)

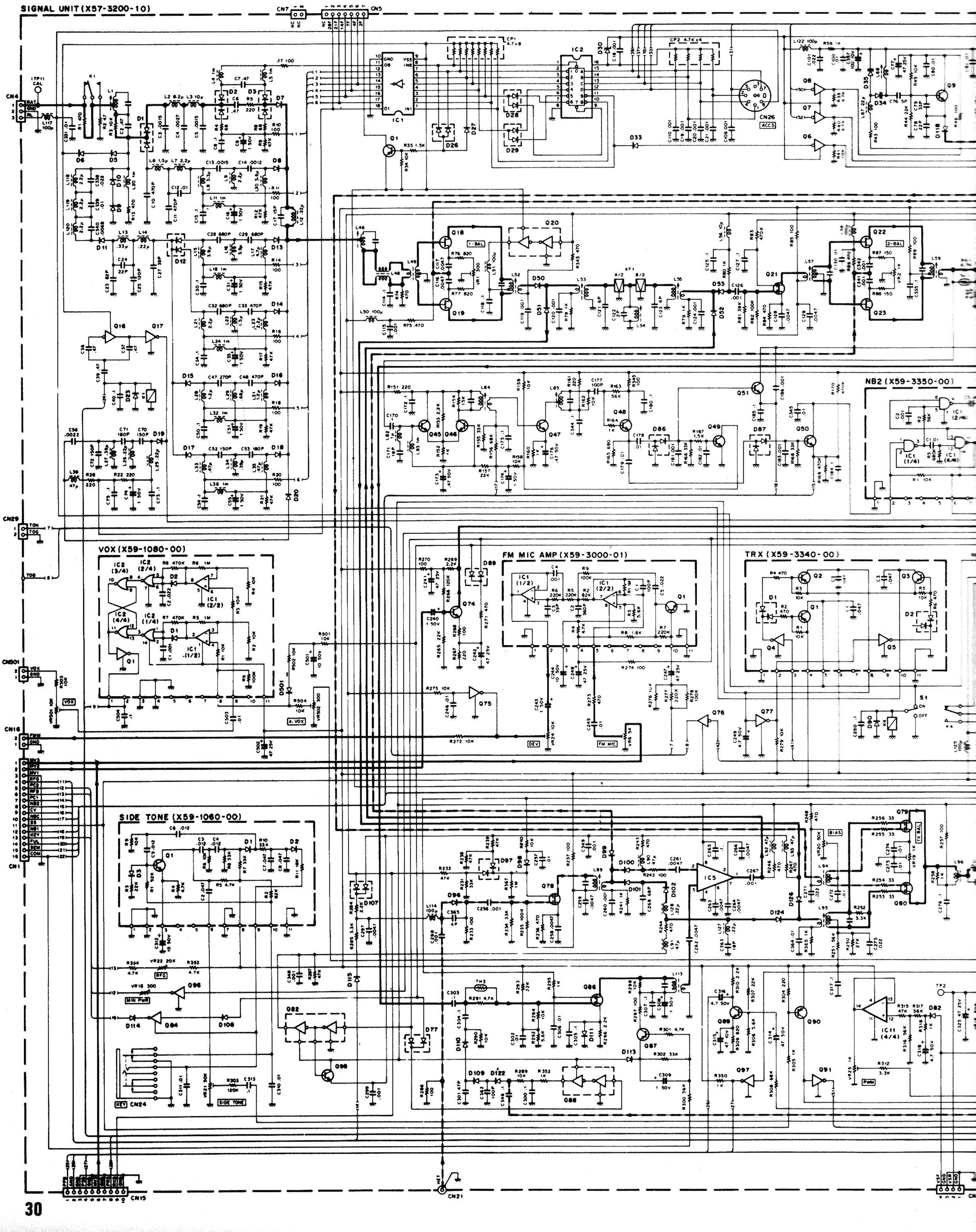

NB2 (X59-3350-00)

DELAY TIME (X59-3360-00)

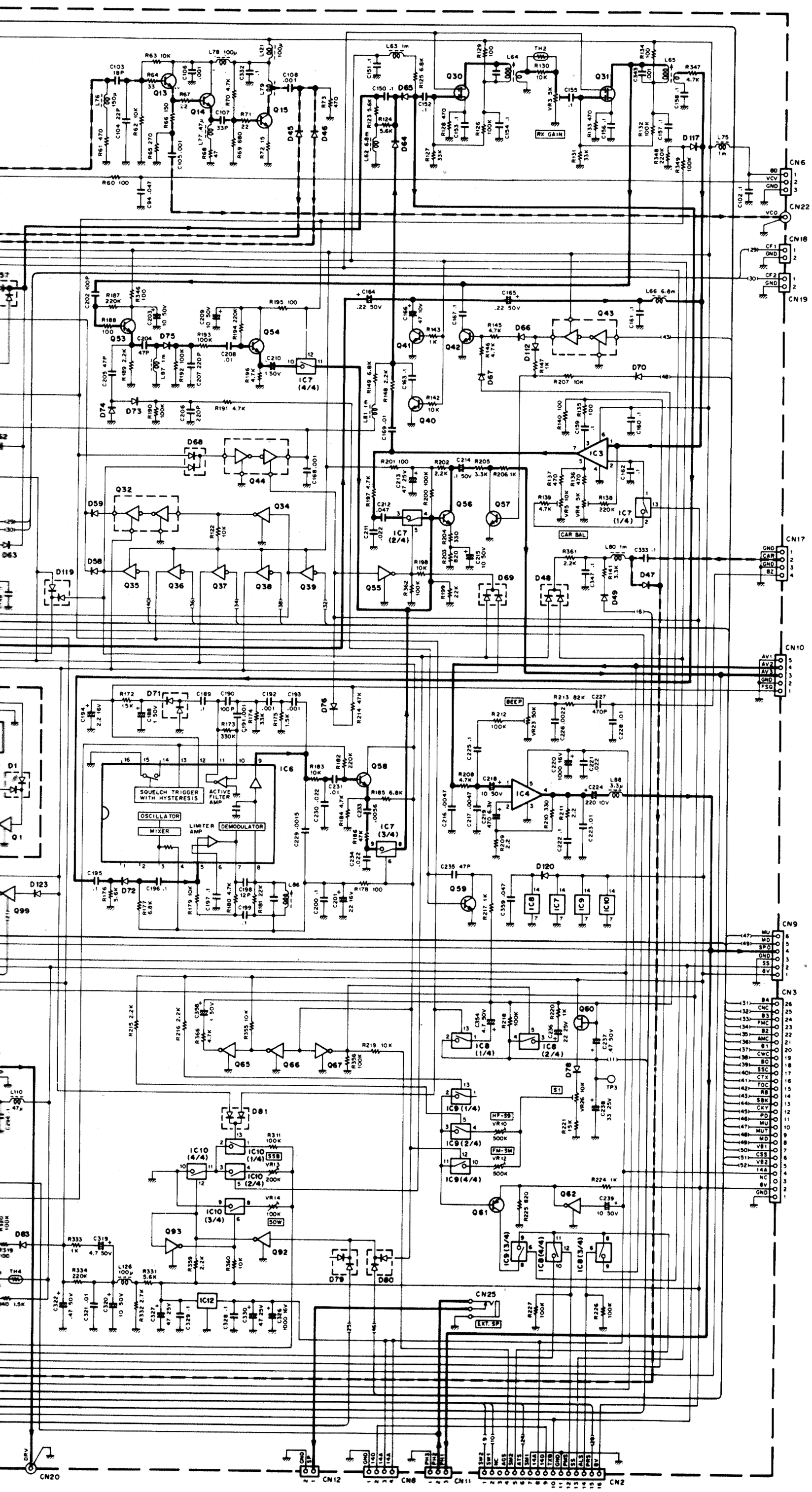

(X57-3200-10)

Q1,28,61,69,87,90	: 2SA1162(Y)
Q17,34,55,65~67,75,77,84, 91,92,96,97,99	: DTC114EK
Q6~8,35~39,76	: DTA143EK
Q9~11,13	: 2SC2668(Y)
Q14	: 2SC1907
Q15,81	: 2SC2053
Q16	: DTA114EK
Q18,19,22,23	: 2SK125-5
Q20,32,43,44,82,88	: FMC3
Q21,79,80	: 3SK122(L)
Q27,30,31,78,86	: 3SK73(GR)
Q29,40~42,45~54,56~59, 74,89,98	: 2SC2712(Y)
Q60,68	: 2SK192A(Y)
Q62,93	: DTC114TK
IC1	: M54581P
IC2	: M74LS145P
IC3	: AN612
IC4	: μPC2002V
IC5	: SN16913P
IC6	: MC3357P
IC7~10	: TC4066BP
IC11	: LM324N
IC12	: AN7808
D1~3,12	: DAN235K
D5,10	: US1090
D6,9	: V08(G)
D7,8,11,13~20,38,41,45,46, 50~53,99~102,109,110,118, 122,124,126	: RLS135
D23,90	: 1S1555
D48,57,61,66,69,77, 79~81,85,89,97,107,119	: DAN202K
D26,28,29	: DAP202K
D27,33,49,54~56,58~60, 62~67,70,72~74,76,78,83, 88,92,95,98,108,112~115,117, 120,123,501,502	: RLS73
D30,93,503	: UZ-3.0B
D34~37,39,40	: ITT310TE
D47,96	: M1204
D71,75,82,86,87	: HSM88AS
D91	: MTZ9.1JB
D111	: KB-369
D116,125	: RLZ3.6B
TH1~4	: 112-502-2

(X59-1060-00)

Q1	: 2SC2712(Y)
D1,3	: DAN202K
D2	: DAP202K

(X59-1080-00)

Q1	: 2SC2712(Y)
IC1	: NJM2904M
IC2	: TC4001BF
D1,2	: DAP202K

(X59-3000-01)

Q1	: 2SC2712(Y)
IC1	: NJM4558M

(X59-3340-00)

Q1,2	: 2SA1204(Y)
Q3	: 2SA1182(Y)
Q4,5	: DTC114EK
D1,2	: DAN202(K)

(X59-3350-00)

Q1,2	: DTC114EK
IC1	: TC40118F

(X59-3360-00)

Q1~5	: DTC114EK
Q6	: DTA114EK
Q7	: DTC114TK
D1	: DAN202(K)

Note:

Circuit Diagram is subject to c

■ CONTROL UNIT (X53-3100-11)

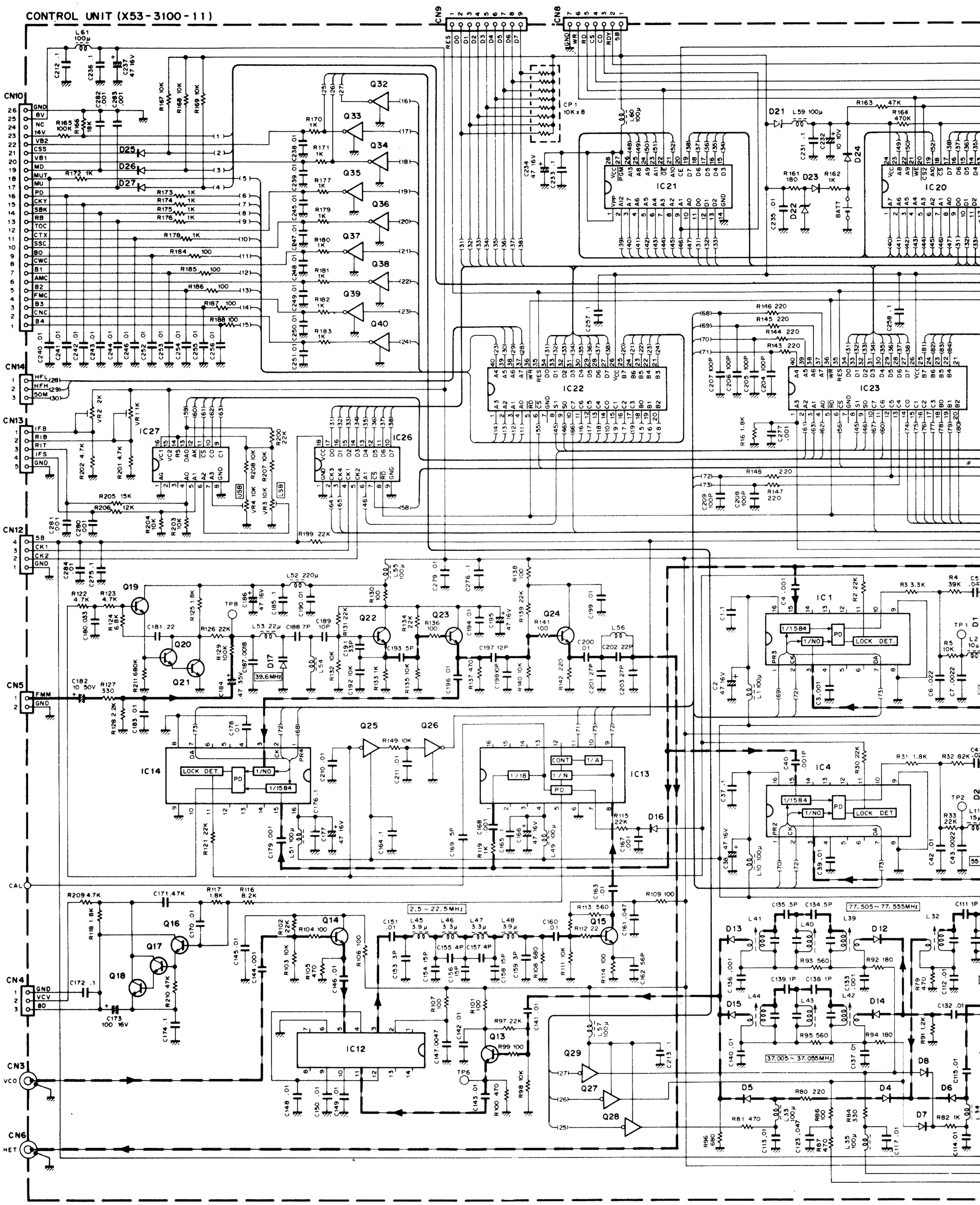

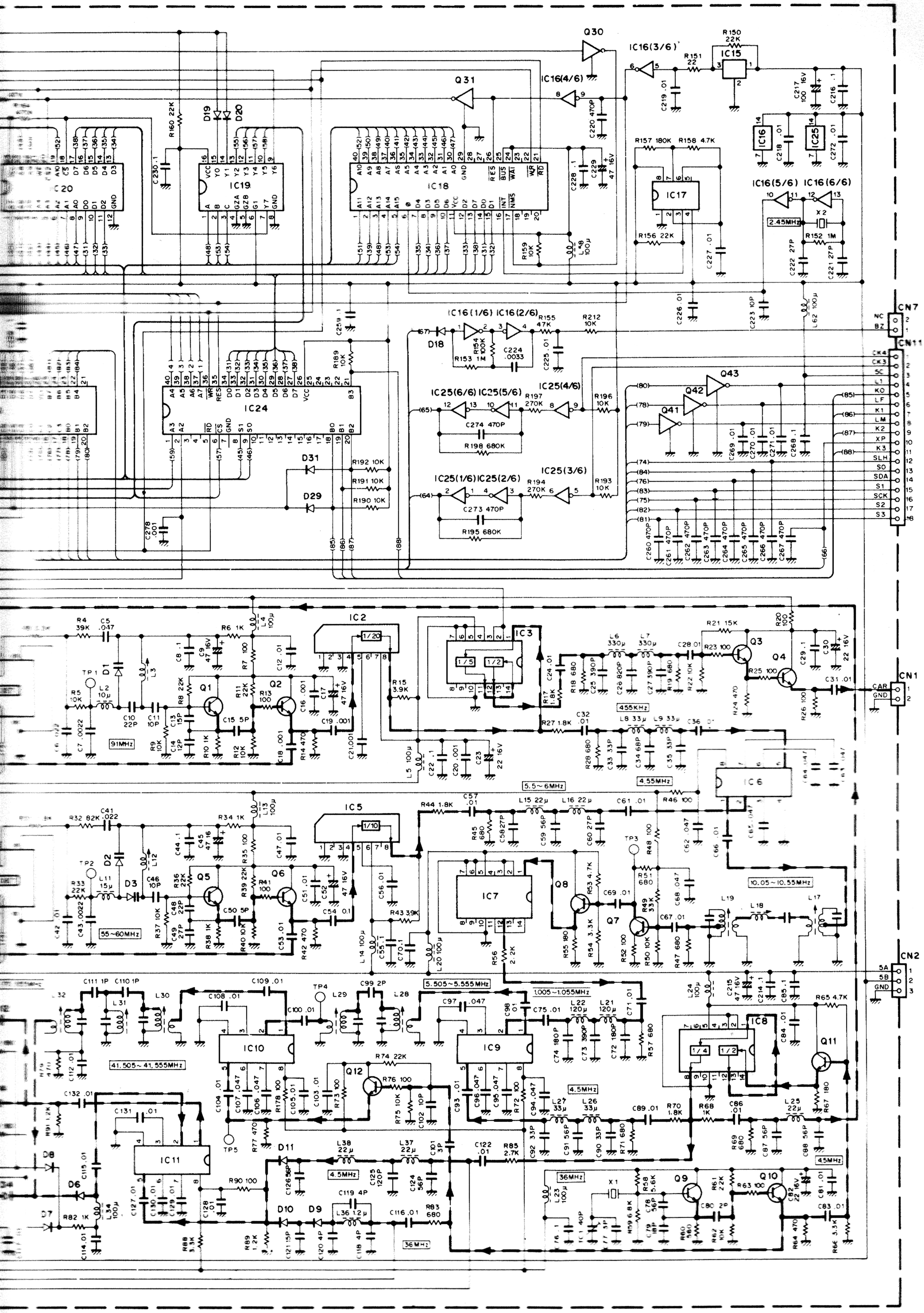

D1	: 1SV53A
D2,3	: 1TT3 (OTE)
D4 ~ 6 9 ~ 15	: RLS135
D7,8,16 18 ~ 21 23 ~ 27	: RLS73
D17	: 1SV153
D22	: UZ3.3BCA
D29,31	: 1SS133
IC1,4,14	: M54927P
IC2	: M54459L
IC3	: SN74LS90N
IC5	: M54460L
IC6,9,10,11	: SN16913P
IC8	: M74LS93P
IC12	: SN76514N
IC13	: MB87006A
IC15	: PST520D
IC16,25	: TC4069UBP
IC17	: ME555C or NE555P
IC18	: BU18400A
IC19	: SN74LS138N
IC20	: TC5518CPL-20
IC21	: MBM27C128-25JAJ
IC22 ~ 24	: TMP8255AP-5
IC26	: LZ92K37
IC27	: MB4052
Q1,2,5,6 10 ~ 15 22 ~ 24	: 2SC2668(Y)
Q3,7,8	: 2SC2458(Y)
Q4	: 2SC1959(Y)
Q9	: 2SC2787(L)
Q16 ~ 21	: 2SC2459(BL)
Q25	: DTA124ES
Q26	: DTC124ES
Q27 ~ 29	: DTA143ES
Q30 ~ 40	: DTC144WS
Q41 ~ 43	: DTC143TS