5. TH-77A/77E BLOCK DIAGRAM

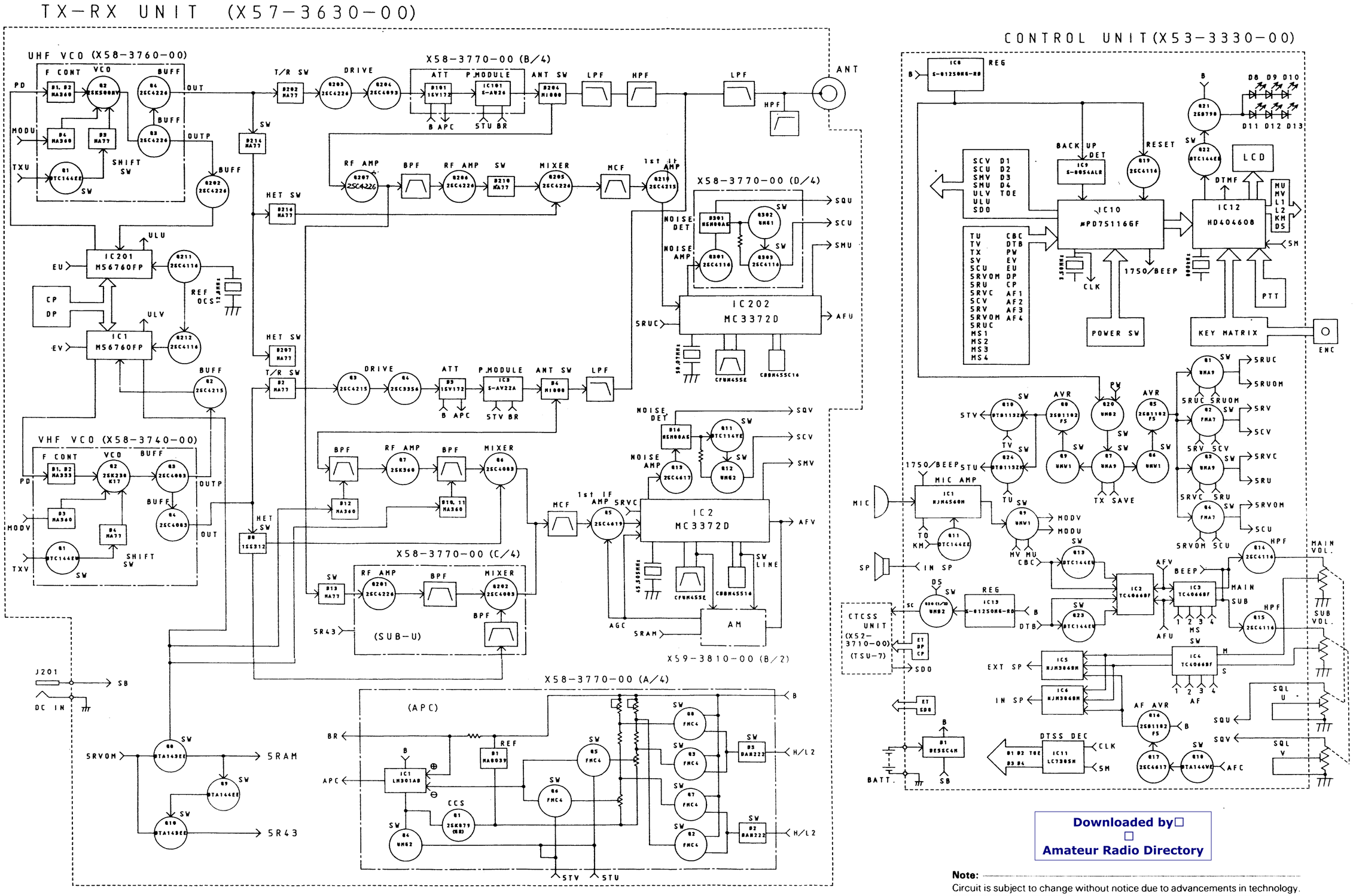

Downloaded by
Amateur Radio Directory

Note:
Circuit is subject to change without notice due to advancements in technology.

TH-77A/77E SCHEMATIC DIAGRAM

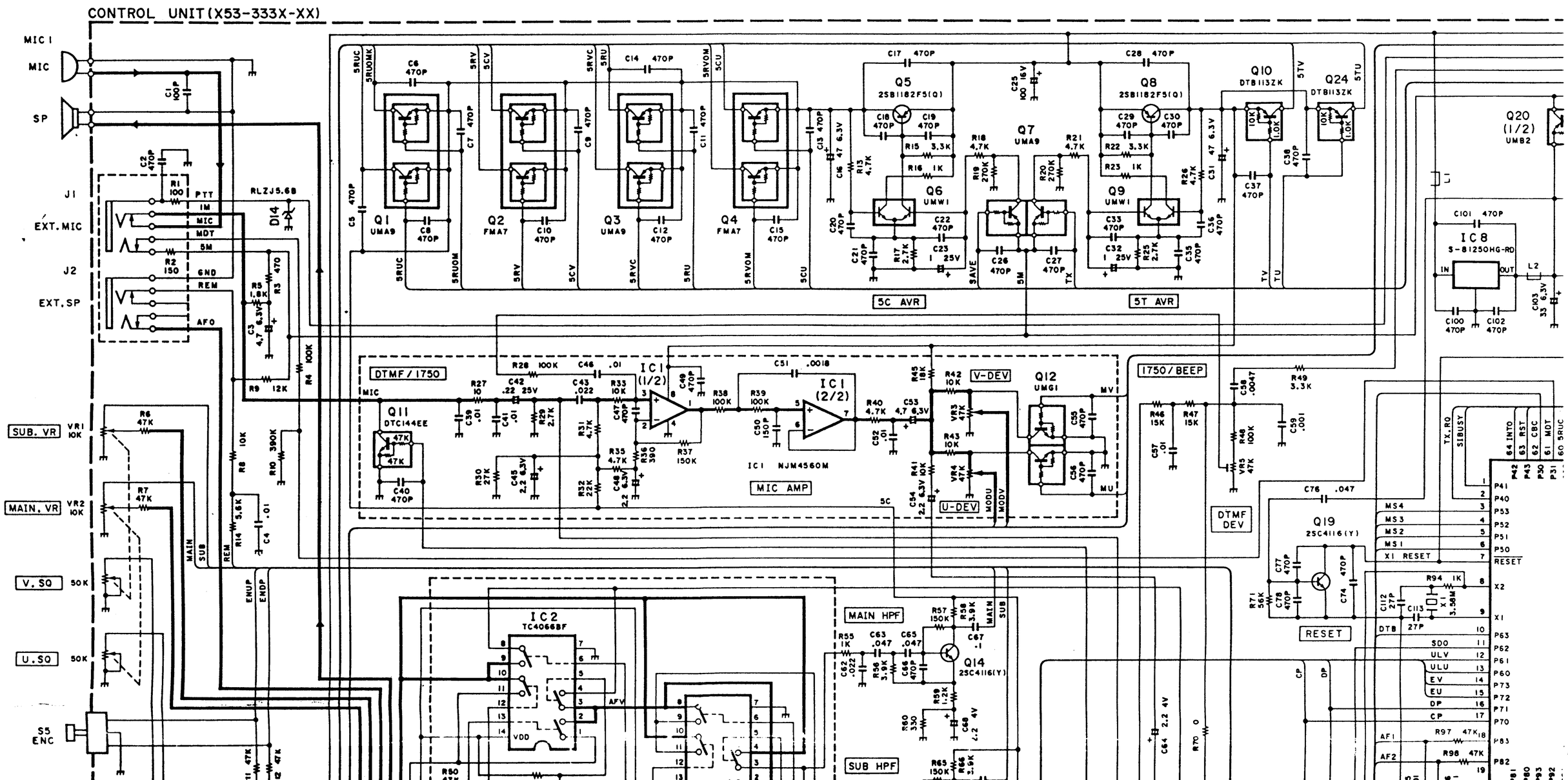

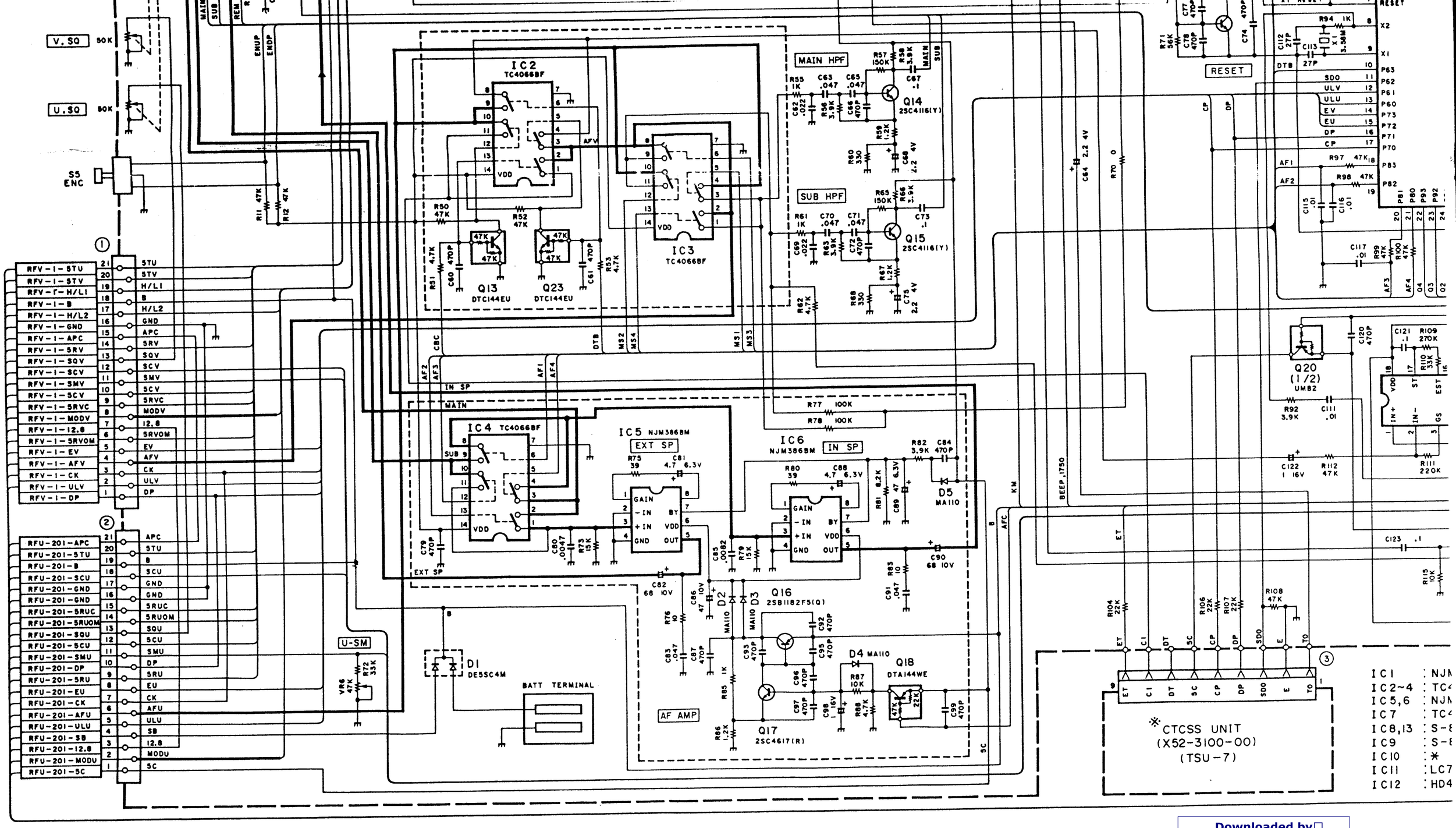

Downloaded by
Amateur Radio Directory

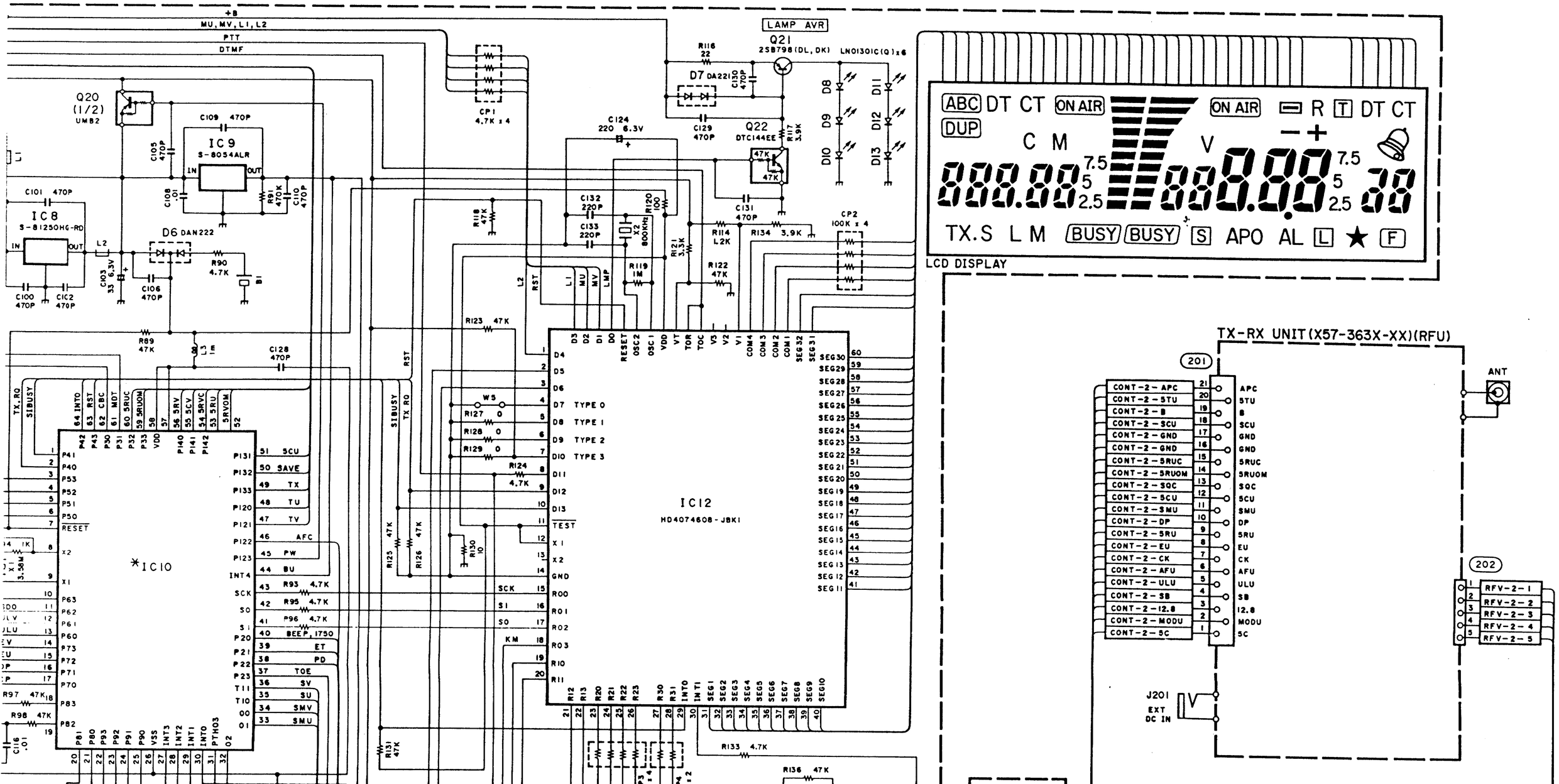
+B
MU, MV, L1, L2
PTT
DTMF
LAMP AVR
Q21
2SB798(DL, DK)
LN01301C(Q)x6
Q20
(1/2)
UMB2
IC9
S-8054ALR
IC8
S-81250HG-RD
D6 DAN222
Q22
DTC144EE
D7 DA2201
CP1
4.7K x 4
CP2
100K x 4
IC12
HD4074608-JBK1
*IC10
TYPE 0
TYPE 1
TYPE 2
TYPE 3
LCD DISPLAY
TX-RX UNIT(X57-363X-XX)(RFU)
ANT
J201
EXT
DC IN
CONT-2-APC
CONT-2-5TU
CONT-2-B
CONT-2-SCU
CONT-2-GND
CONT-2-5RUC
CONT-2-5RUOM
CONT-2-SQC
CONT-2-5CU
CONT-2-SMU
CONT-2-DP
CONT-2-5RU
CONT-2-EU
CONT-2-CK
CONT-2-AFU
CONT-2-ULU
CONT-2-SB
CONT-2-12.8
CONT-2-MODU
CONT-2-SC
RFV-2-1
RFV-2-2
RFV-2-3
RFV-2-4
RFV-2-5

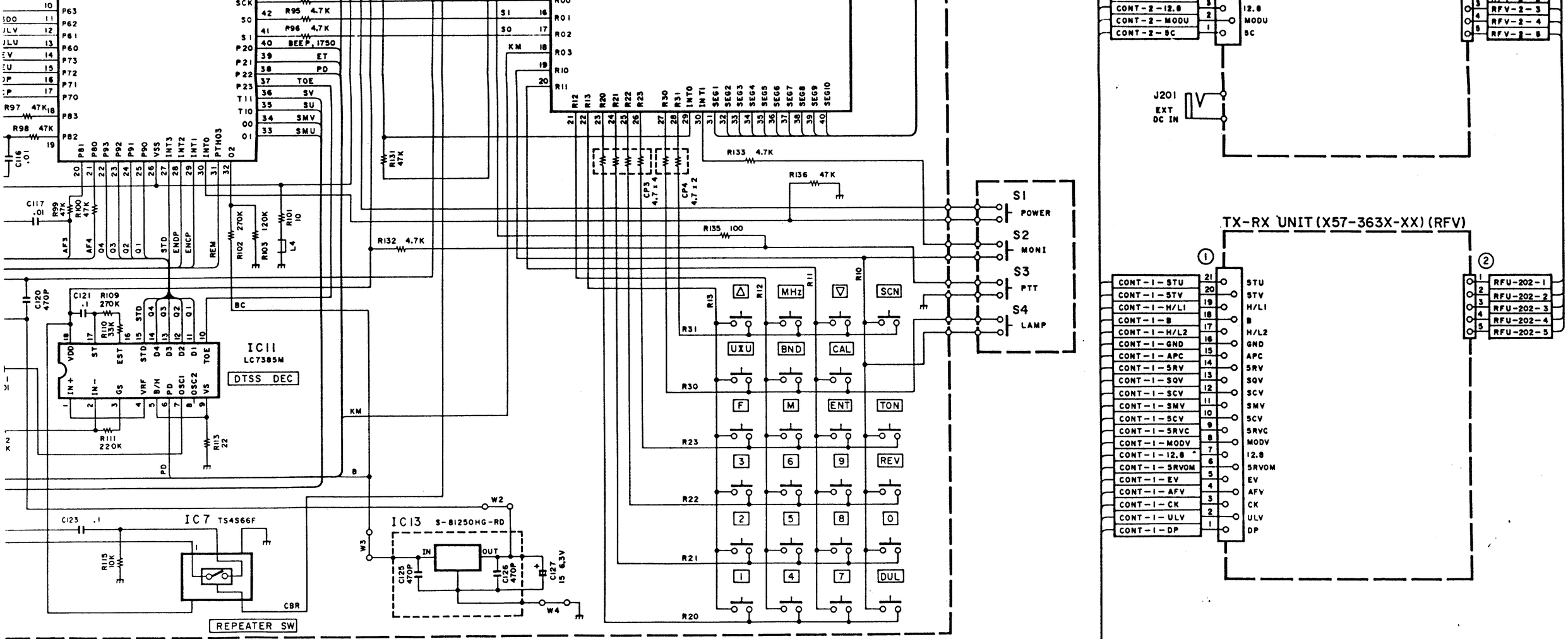

IC1	: NJM4560M	Q1,3,7	: UMA9	Q17	: 2SC4617(R)	D1	: DE5SC4M
IC2~4	: TC4066BF	Q2,4	: FMA7	Q18	: DTA144WE	D2~5	: MA110
IC5,6	: NJM386BM	Q5,8,16	: 2SB1182F5(Q)	Q20	: UMB2	D6	: DAN222
IC7	: TC4S66F	Q6,9	: UMW1	Q21	: 2SB798(DL,DK)	D7	: DA221
IC8,13	: S-81250HG-RD	Q10,24	: DTB113ZK			D8~13	: LN01301C(Q)
IC9	: S-8054ALR	Q11,22	: DTC144EE			D14	: RLZJ5.6B
IC10	: *	Q12	: UMG1				
IC11	: LC7385M	Q13,23	: DTC144EU				
IC12	: HD4074608-JBK1	Q14,15,19	: 2SC4116(Y)				

Downloaded by
Amateur Radio Directory

Note:
Circuit is subject to change without notice due to advancements in technology.

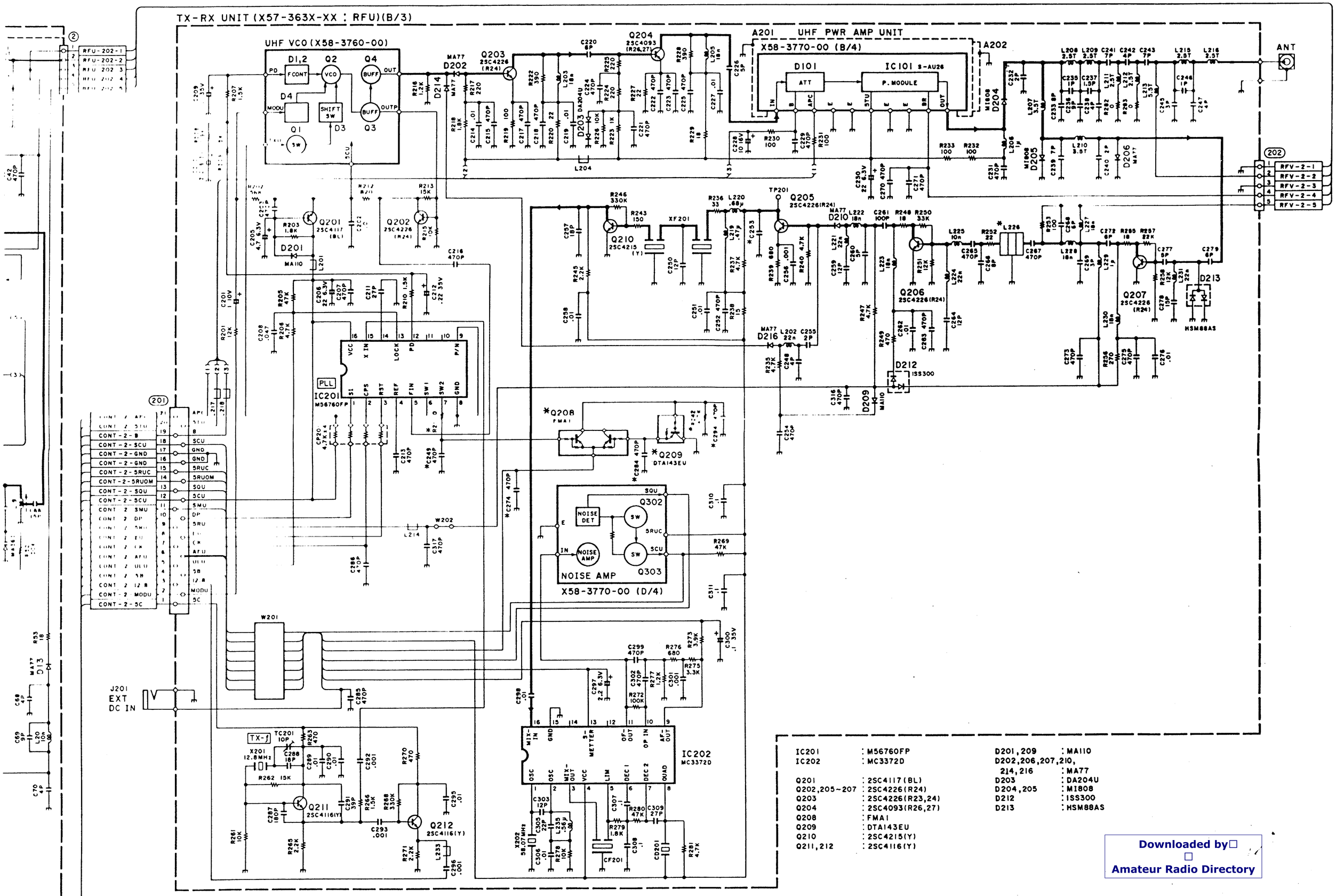

IC201	: M56760FP	D201,209	: MA110
IC202	: MC3372D	D202,206,207,210, 214,216	: MA77
Q201	: 2SC4117(BL)	D203	: DA204U
Q202,205~207	: 2SC4226(R24)	D204,205	: MI808
Q203	: 2SC4226(R23,24)	D212	: ISS300
Q204	: 2SC4093(R26,27)	D213	: HSM88AS
Q208	: FMA1		
Q209	: DTA143EU		
Q210	: 2SC4215(Y)		
Q211,212	: 2SC4116(Y)		

Downloaded by
Amateur Radio Directory

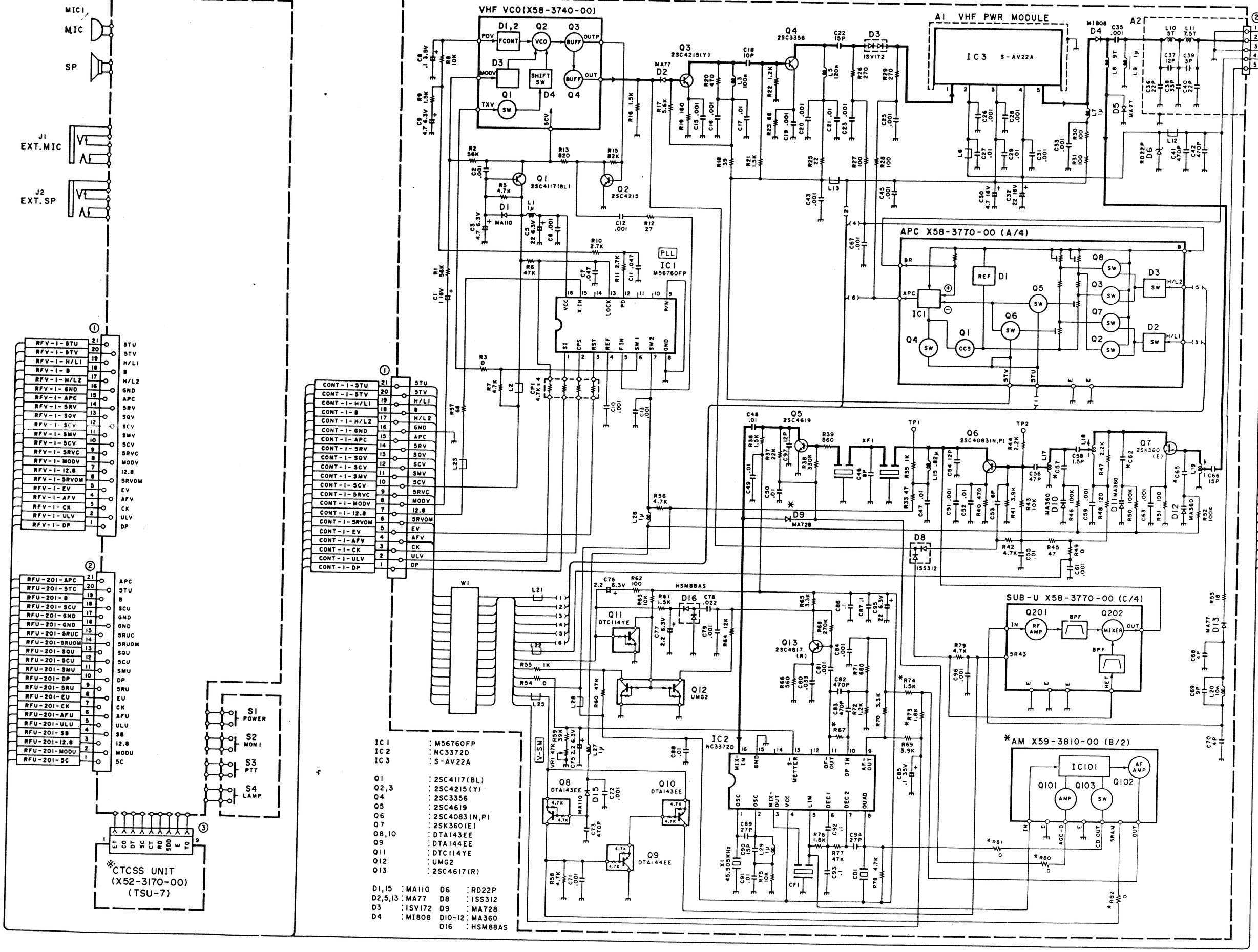
VHF VCO(X58-3740-00)
A1 VHF PWR MODULE
IC3 S-AV22A
APC X58-3770-00 (A/4)
SUB-U X58-3770-00 (C/4)
*AM X59-3810-00 (B/2)
*CTCSS UNIT
(X52-3170-00)
(TSU-7)
MIC1
MIC
SP
J1
EXT.MIC
J2
EXT.SP
S1 POWER
S2 MON I
S3 PTT
S4 LAMP
IC1 : M56760FP
IC2 : NC3372D
IC3 : S-AV22A
Q1 : 2SC4117(BL)
Q2,3 : 2SC4215(Y)
Q4 : 2SC3356
Q5 : 2SC4619
Q6 : 2SC4083(N,P)
Q7 : 2SK360(E)
Q8,10 : DTA143EE
Q9 : DTA144EE
Q11 : DTC114YE
Q12 : UMG2
Q13 : 2SC4617(R)
D1,15 : MA110
D2,5,13 : MA77
D3 : ISV172
D4 : MI808
D6 : RD22P
D8 : ISS312
D9 : MA728
D10~12 : MA360
D16 : HSM88AS