HF TRANSCEIVER

TS-570D

SERVICE MANUAL

KENWOOD

© 1996-9 PRINTED IN JAPAN
B51-8343-00 (N) 1331

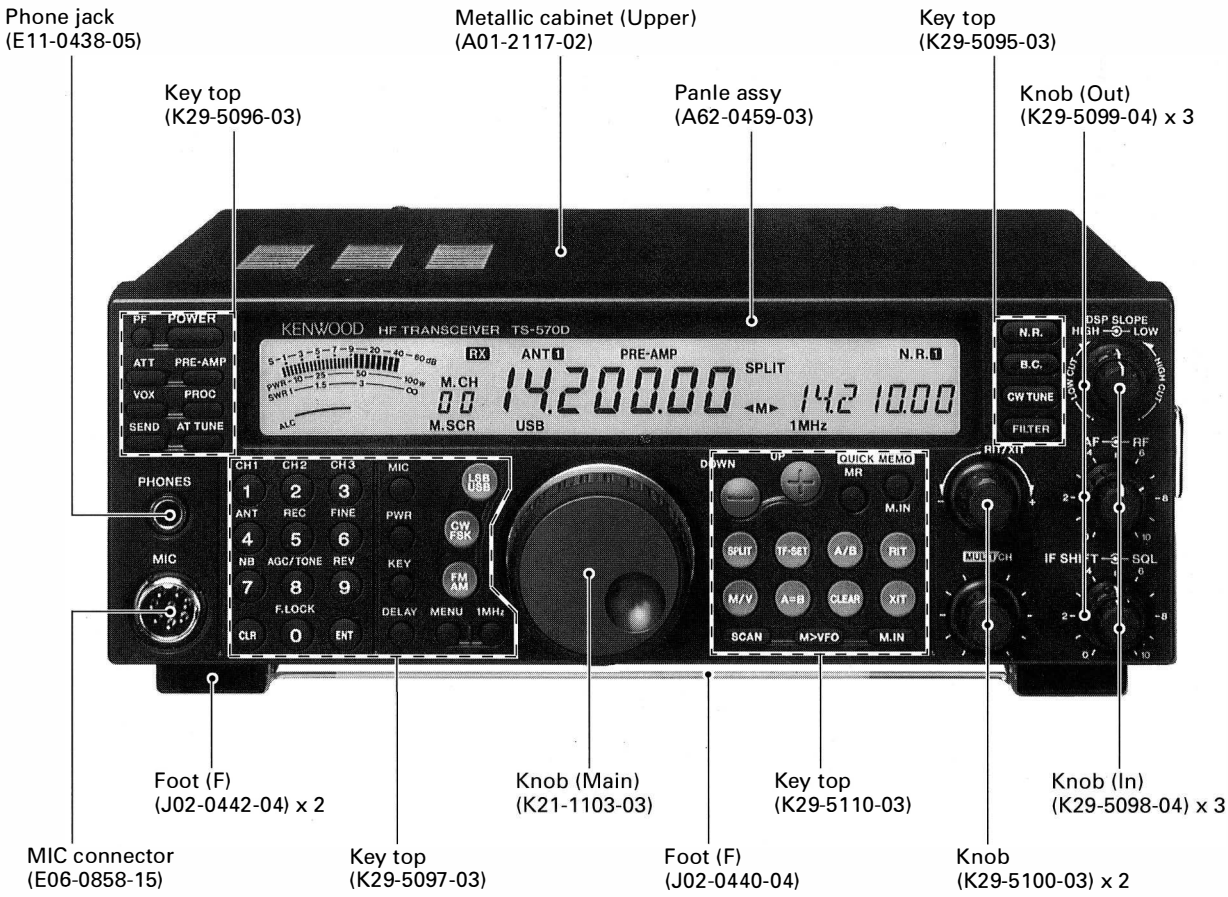

CONTENTS

CIRCUIT DESCRIPTION 2
DESCRIPTION OF COMPONENTS 30
SEMICONDUCTOR DATA 36
PARTS LIST 44
EXPLODED VIEW 61
PACKING 63
ADJUSTMENT 64
TERMINAL FUNCTION 78
PC BOARD VIEWS / CIRCUIT DIAGRAMS
LCD ASSY (B38-0765-05) 81
FINAL UNIT (X45-353X-XX) (B/2) 84
TX-RX UNIT (X57-500X-XX) (B/2) 84
FINAL UNIT (X45-353X-XX) (A/2) 85
CONTROL UNIT (X53-369X-XX) 93
TX-RX UNIT (X57-500X-XX) (A/2) 101
BLOCK DIAGRAM 113
LEVEL DIAGRAM 115
VS-3 (VOICE SYNTHESIZER UNIT) 117
DRU-3A (DIGITAL RECORDING UNIT) 117
SPECIFICATIONS 119

CIRCUIT DESCRIPTION

Frequency Configuration

The TS-570D utilizes double conversion in all transmit modes and non-FM receive modes, and triple conversion in FM mode.

When the receiver frequency f_{IN} from the antenna in SSB mode is zero beat (i.e., at zero to the SSB signal with a carrier point of f_{IN}), the relationship between these signals is expressed as follows:

$$f_{IN} = f_{LO1} - f_{LO2} - f_{CAR}$$

All the frequencies are generated by the PLL circuit as shown in the PLL block diagram in Figure 2, and the receiver frequency is determined by the reference frequency f_{STD}, the PLL divide ratio and DDS data. Therefore, the reference frequency accuracy equals the operating frequency accuracy.

The accuracy of the reference crystal oscillator in the TS-570D is 10 ppm (–10 to +50°C). If an optional temperature compensated crystal oscillator (TCXO) SO-2 is installed, the accuracy becomes 0.5 ppm (–10 to +50°C).

When the transmitter is used in SSB mode or in other modes, likewise, the frequency is determined by the reference frequency f_{STD} and PLL divide ratio. The display frequencies in the modes are listed in Table 1.

In FSK mode, the TS-570D displays the mark transmitter frequency.

In CW mode, the TS-570D uses the variable CW pitch system so that the receiving pitch can be changed in the range 400 to 1000Hz in 50Hz steps while the desired signal remains in the center of the IF filter band. Since the receiving pitch varies with the side tone, it is possible to zero in by receiving the desired signal at the same pitch as the side tone.

FM transmission is carried out by sending the audio signal from the microphone to the 64.22MHz VCO and modulating fLO2.

Mode	Display frequency
USB, LSB	Carrier point frequency
CW	Transmission carrier frequency
FSK	Mark transmitter frequency
AM, FM	IF filter center frequency

Table 1 Display frequency in each mode

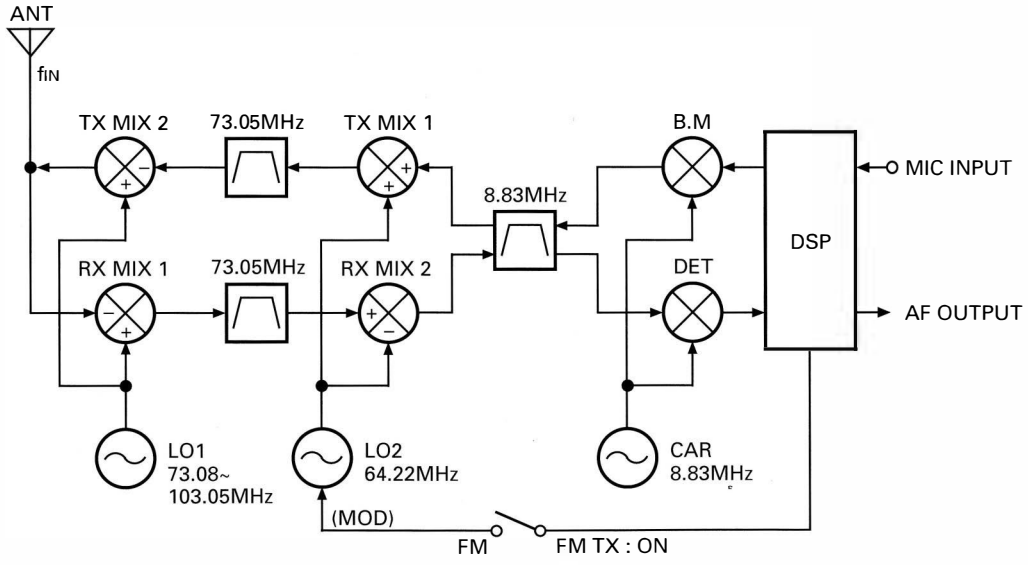

Fig. 1 Frequency configuration

CIRCUIT DESCRIPTION

PLL Circuit

The TS-570D PLL circuit consists of a PLL loop that includes a DDS that covers a frequency range 30kHz to 30MHz in 10Hz or 1Hz steps according to the 20MHz reference frequency, a DDS circuit that generates CAR and a PLL loop that produces LO2.

The divide ratio data to each PLL loop and DDS data are controlled by a microprocessor. Each loop is controlled by a single crystal frequency control system based on the reference frequency f_{STD}. (See the PLL block diagram in Figure 2.)

■ Reference Signal Generation Circuit

The reference frequency f_{STD} used for frequency control is produced by the 20MHz crystal oscillator (X500 and Q500: 2SC2714(Y)). It is used as the reference signal f_{REF} for the PLL IC and DDS1 in the PLL unit.

The 10MHz signal divided by 2 by DDS1 goes to DDS2 in the LO1 generator. The signal also goes to the CAR generator to produce a 8.83MHz signal.

The crystal oscillator can be replaced by an optional TCXO (SO-2). It is switched to the TCXO by cutting lead resisters R503 and R504.

■ LO2

Q509: 2SK1975(V) in VCO2 generates 64.22MHz. The 20MHz reference frequency f_{REF} is supplied to pin 15 of IC500: MB86001PF, and is divided by 1000 (4000 in FM mode) to produce a 20kHz (5kHz in FM mode) comparison frequency.

The VCO2 output is applied to pin 6 of IC500: MB86001PF and divided by 3211 (12844 in FM mode). The signal is compared with the 20kHz (5kHz in FM mode) signal with the phase comparator. The VCO2 frequency is locked. The divide ratio is transmitted from the control unit.

The output from the PLL passes through buffer Q510, amplified by amplifier Q511, Q546, and passes through a low-pass filter. The impedance is converted and the resulting signal is output to the RF unit as LO2.

■ LO1

Three VCOs Q528, Q530, Q532: 2SK1875(V)x3 generate 73.08MHz to 103.05MHz. The 20MHz reference frequency is applied to pin 15 of PLL IC IC507: MB86001PF, and divided by 40 to produce a 500kHz comparison frequency.

The output passes through the Q535 buffer. One output is amplified by amplifier Q534: 2SC2714(Y) and band-pass filter and goes to the RF unit. The other output passes through buffer Q533: 2SC2714(Y) and goes to pin 5 of mixer IC506: SN76514. A signal of 65.54 to 66.04 MHz is input to pin 11 of IC506 to produce a signal of 7.5 to 37MHz. The signal is output from pin 13, passes through a low-pass filter, a high-pass filter, buffer Q523, and amplifier Q522 and goes to pin 6 of IC507.

This signal is divided by N, and compared with the 500kHz signal with the phase comparator. The mixer output frequency is locked in 500kHz steps. The divide ratio N is transmitted from the control unit as data (N: 15 to 75) corresponding to 0 to 30MHz in 500kHz steps. One of three VCOs is selected by the serial/parallel IC IC14: NJU3718G in the TX-RX unit according to the VCO change signals (VCO1A, VCO1B, and VCO1C).

DDS2 (IC502: F71022) generates a 540 to 1040kHz digital signal. It is converted to an analog signal by a digital-to-analog converter consisting of CP502, CP503, and Q518, passes through a low-pass filter, and goes to pin 6 of IC504: UPC1037GR. The 5MHz signal produced by diving the 10MHz reference frequency for the DDS2 by 2 goes to pin 8 of the mixer, and a 5.54 and 6.04MHz signal is output from pin 2. The output signal passes through a band-pass filter and buffer Q519, and input to pin 8 of mixer IC506: UPC1686G. It is mixed with the 60MHz signal obtained by tripling 20MHz reference frequency f_{REF} by multiplying circuit Q521 to produce a 64.54- to 66.04MHz signal. This signal passes through a band-pass filter, and goes to pin 11 of mixer IC506.

DDS2 sweeps the 540 to 1040kHz digital signal in 10 or 1Hz steps. LO1 covers 73.08 to 103.05MHz in 10 or 1Hz steps and is output as LO1 to the RF unit.

■ CAR

To generate the 8.83MHz signal used for local oscillation and detection, DDS1 (IC501: F71022) generates a digital signal with the 1.17MHz basic frequency. It is converted to an analog signal by a digital-to-analog converter consisting of CP500, CP501, and Q513. The signal passes through a low-pass filter and goes to pin 6 of mixer IC503: UPC1037GR. The 10MHz chopper output from DDS1 is input to pin 8 of the mixer and the 8.83MHz signal is output from pin 3.

The output signal passes through buffer Q514. Unwanted components are removed by a ceramic filter consisting of CF500 and CF501. The resulting signal passes through amplifier Q515, buffer Q516, and a low-pass filter, and is output to the RF unit as the CAR signal.

CIRCUIT DESCRIPTION

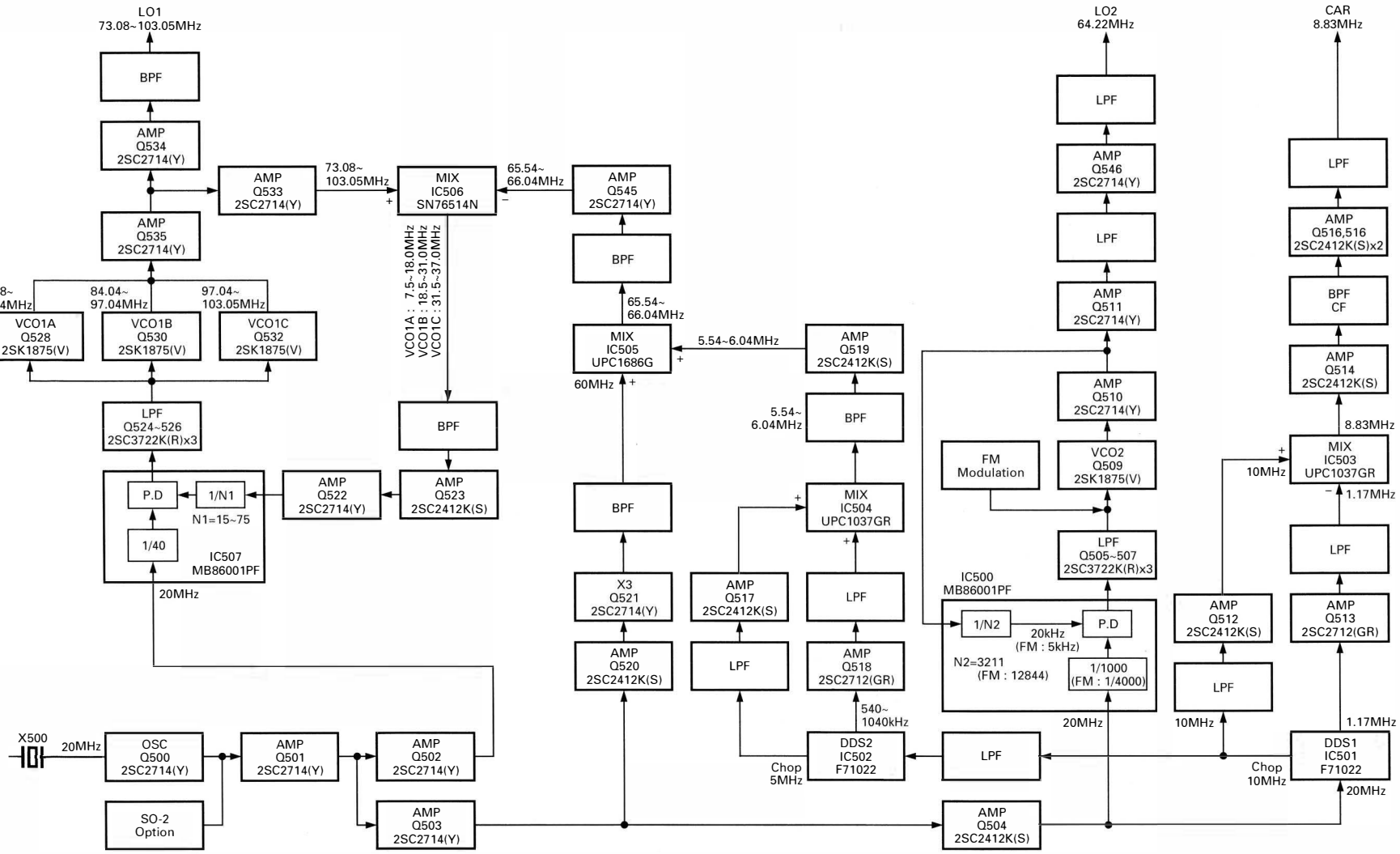

Fig. 2 PLL block diagram

CIRCUIT DESCRIPTION

■ DDS Circuit Configuration

The DDS IC has been developed with standard cells to implement a high-speed operation circuit and large-capacity ROM at a low cost.

1) IC configuration

The IC consists of the following components:

Two 28 bit registers for setting frequency data, one 28 bit frequency shift register for addition to the frequency register, a 23 bit parallel signal input section for frequency modulation with a parallel signal, and a data entry and selection section.

Frequency modulation section comprised of a 28 bit adder that adds frequency data and frequency modulation data

Phase data operation section that adds data from the frequency modulation section with the 28 bit phase data register

SIN-ROM that converts phase data to sine data.

2) Frequency/shift data setting

Using serial signals synchronized with clock pulses, a total of 30 bits (2 bits that specify the destination to which data are set and 28 bits for frequency data) are set in three internal registers.

3) Frequency register selection

The data set in the two frequency registers are selected by the SLAB input of the DDS IC. This pin handles the TXC signal. This function eliminates the need for the TS-570D microprocessor to set frequency data for each transmission and reception.

4) Frequency data selection

The SPSL input of the DDS IC selects whether to use the data in the internal frequency shift register or the data from parallel input as frequency modulation data.

5) Frequency modulation

The MDEN input of the DDS IC enables or disables frequency modulation. When frequency modulation is enabled, frequency data is added, and the result is input to the phase data operation section.

6) Phase data operation

The target frequency phase data is output by accumulating 28 bit frequency data in the 28 bit phase accumulator.

$Fout = Fs/2^{28} \cdot Dsum$

Fs : DDS IC input frequency/2

Dsum : Frequency data+Frequency modulation data

If 2^{25} is set for Dsum when 1/8 Fs is output, the phase data must be increased by $\pi/8$.

A 28 bit absolute value operation has been used here, but a 28 bit signed operation can also be used, assuming that the MSB is a sign. If complement data of 8000000 to FFFFFFFF (hex) is set, the phase moves in the negative direction for the positive data.

7) SIN-ROM

Phase data from the phase data operation section is converted to sine data of 0000 to FFFF (hex) in the 16 bit offset binary format.

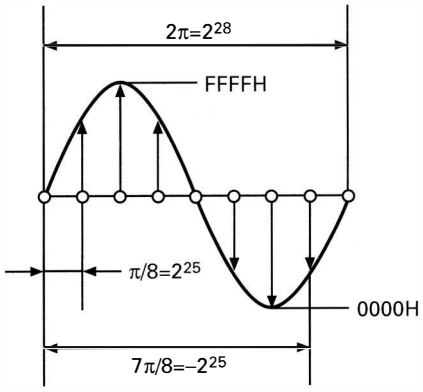

Fig. 3

CIRCUIT DESCRIPTION

■ Local Signals (LO1 and CAR)

1) LO1

Table 2 lists the DDS2 frequency configuration. DDS2 varies from 540 to 1040kHz. When the display frequency is 490 or 990kHz (for example, 13.99MHz, 14.49MHz), 540kHz is output. When the display frequency increases, the DDS2 frequency increases by the amount of change. When the frequency reaches 1440kHz, the frequency is switched to 540kHz. When the frequency increases to 500kHz (and 1MHz), the frequency returns to 540kHz. (Figure 4)

By changing the 500kHz band in synchronization with the display frequency, the 500kHz comparison PLL circuit is locked and LO1 is generated.

As shown in Table 2, DDS2 (LO1) frequency configuration, the frequency is shifted according to the offset (IF filter setting), RIT, XIT, production mode carrier correction value, and IF shift.

2) CAR

Table 3 lists the DDS1 frequency configuration. The 8.83MHz CAR frequency is generated by the chopper circuit. The DDS1 output frequency is 1.17MHz. The CAR frequency is shifted according to the offset (IF filter setting) correction, carrier correction value, IF shift, CW pitch, and FSK tone.

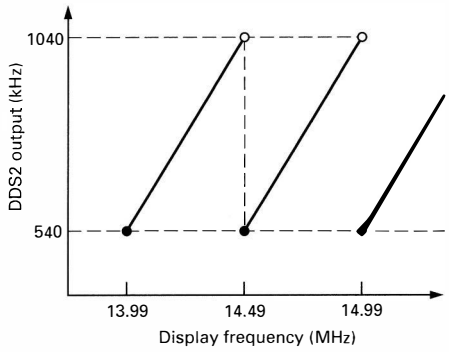

Fig. 4

Component		DDS2 (1Hz)															
		LSB		USB		CW		CW-R		FSK		FSK-R		AM		FM	
		RX	TX	RX	TX	RX	TX	RX	TX	RX	TX	RX	TX	RX	TX	RX	TX
BASE		540kHz~1040kHz															
Offset	WIDE (2.4k)	–1.5k	–1.5k	+1.5k	+1.5k	+0.7k	+0.7k	–0.7k	–0.7k	–85	–85	+85	+85	0	0	0	0
	NAR (1800)	–1.5k	–1.5k	+1.5k	+1.5k	+0.4k	+0.4k	–0.4k	–0.4k	–85	–85	+85	+85	0	0	0	0
	NAR (500/270)	–1.5k	–1.5k	+1.5k	+1.5k	0	0	0	0	–85	–85	+85	+85	0	0	0	0
CW pitch		–	–	–	–	–	–	–	–	–	–	–	–	–	–	–	–
FSK tone (H)		–	–	–	–	–	–	–	–	–	–	–	–	–	–	–	–
FSK tone (L)		–	–	–	–	–	–	–	–	–	–	–	–	–	–	–	–
FSK shift (M)		–	–	–	–	–	–	–	–	–	–	–	–	–	–	–	–
FSK shift (S)		–	–	–	–	–	–	–	–	–	–	–	–	–	–	–	–
RIT		+(RIT)	–	+(RIT)	–	+(RIT)	–	+(RIT)	–	+(RIT)	–	+(RIT)	–	+(RIT)	–	+(RIT)	–
XIT		–	+(XIT)	–	+(XIT)	–	+(XIT)	–	+(XIT)	–	+(XIT)	–	+(XIT)	–	+(XIT)	–	+(XIT)
CAR suppression		–(CAR L)	–(CAR L)	+(CAR U)	+(CAR U)	–	–	–	–	–	–	–	–	–	–	–	–
IF shift		–(IF S)	–	+(IF S)	–	+(IF S)	–	–(IF S)	–	–(IF S)	–	+(IF S)	–	–	–	–	–

Table 2 DDS2 (LO1) frequency configuration

CIRCUIT DESCRIPTION

Component		DDS1 (CAR)															
		LSB		USB		CW		CW-R		FSK		FSK-R		AM		FM	
		RX	TX	RX	TX	RX	TX	RX	TX	RX	TX	RX	TX	RX	TX	RX	TX
BASE		1.17MHz (AM RX, FM RX : OFF)															
Offset	WIDE (2.4k)	+1.5k	+1.5k	–1.5k	–1.5k	–0.7k	–0.7k	+0.7k	+0.7k	+85	+85	–85	–85	OFF	0	OFF	0
	NAR (1800)	+1.5k	+1.5k	–1.5k	–1.5k	–0.4k	–0.4k	+0.4k	+0.4k	+85	+85	–85	–85	OFF	0	OFF	0
	NAR (500/270)	+1.5k	+1.5k	–1.5k	–1.5k	0	0	0	0	+85	+85	–85	–85	OFF	0	OFF	0
CW pitch		–	–	–	–	–(PITCH)	–	+(PITCH)	–	–	–	–	–	–	–	–	–
FSK tone (H)		–	–	–	–	–	–	–	–	+2.125k	–	–2.125k –(FSK-S)	–	–	–	–	–
FSK tone (L)		–	–	–	–	–	–	–	–	+1.445k	–	–1.445k –(FSK-S)	–	–	–	–	–
FSK shift (M)		–	–	–	–	–	–	–	–	–	0	–	0	–	–	–	–
FSK shift (S)		–	–	–	–	–	–	–	–	–	–(FSK-S)	–	–(FSK-S)	–	–	–	–
RIT/XIT		–	–	–	–	–	–	–	–	–	–	–	–	–	–	–	–
CAR suppression		+(CAR L)	+(CAR L)	–(CAR U)	–(CAR U)	–	–	–	–	–	–	–	–	–	–	–	–
IF shift		+(IF S)	–	–(IF S)	–	–(IF S)	–	+(IF S)	–	+(IF S)	–	–(IF S)	–	–	–	–	–

Table 3 DDS1 (CAR) frequency configuration

Receiver Circuit Configuration

Figure 5 is a block diagram of the receiver circuit.

The receiver utilizes double conversion with the first IF of 73.05MHz and the second IF of 8.83MHz (triple conversion in FM with the third IF of 455kHz).

The signal coming from the antenna connector passes through the ANT1/ANT2 switching relay, ATIN/THRU switching relay, transmit/receive relay and image filter, and goes to the TX-RX unit. The signal passes through the about-20dB attenuator and IF trap low-pass filter and goes to the 10-part band-pass filter (low-pass filter if the frequency is lower than 1.7MHz). If the frequency is 1.7MHz or higher, the signal passes through a high-pass filter and then a band-pass filter to reduce interference of a strong medium wave output station.

If PRE-AMP is ON, the signal passing through each band-pass filter passes through the low-band and high-band pre-amplifiers. The low-band (21.5MHz or lower) pre-amplifier is a parallel amplifier Q17, Q18: 2SK520x2 with NFB. The high-band (21.5MHz or higher) pre-amplifier is a dual-gate MOS FET Q25: 3SK131 to provide the optimum characteristics for each band. If PRE-AMP is OFF, the pre-amplifiers are bypassed and the dynamic range is boosted.

The signal then passes through the IF trap low-pass filter and is mixed with LO1 by the first mixer Q5 to Q8: 2SK520x4 to produce the first IF of 73.05MHz. The resulting signal passes through two MCFs (XF1) and AGC amplifier Q12: 3SK131, and is mixed with LO2 (64.22MHz) by the second mixer Q10, Q13: 2SK520x2 to produce the second IF of 8.83MHz. The second IF signal output from the mixer is divided into two signals: one passes through the buffer amplifier and goes to the NB amplifier. The other signal enters the IF amplifier Q11: 3SK131. The AGC is controlled and noise is blanked by the NB in Q11.

The second IF signal passes through the 8.83MHz IF filter. One of THRU, 6kHz, 2.4kHz, and optional bandwidth frequency (1.8kHz, 500Hz, or 270Hz) can be selected for the IF filter.

The signal is then amplified by Q14: 2SC2412K and goes to the FM detection HIC IC7: KCD10 and SSB/AM/CW detection HIC IC15: KCD11. In FM mode, the signal is converted to the third IF of 455kHz by KCD10, passes through the limiter amplifier, and quadrature-detected. In modes other than FM, the signal is amplified by KCD11 and used for the AGC voltage. In SSB and CW, the signal is product-detected and in AM, envelope-detected and output. Each detection output is selected by IC9: BU4066BCFV for each mode and goes to the control unit.

In the control unit, the signal is amplified by IC503: NJM2100M, goes to CODEC IC IC504: AK4506-VS to convert it to a digital signal. The resulting signal is filtered by DSP IC507: ADSP2181KS-115, the volume is controlled, and the subtone is decoded. The signal is converted to an analog signal by the CODEC IC, passes through active filter IC505, IC506: NJM2100M, returns to the TX-RX unit, and amplified to the required level by AF amplifier IC8: LA4446.

CIRCUIT DESCRIPTION

■ IF Filter Ratings (TX-RX Unit)

Item	XF1 : L71-0401-05	XF2 : L71-0266-05	XF3 : L71-0208-15
Nominal center frequency	73.05MHz	8830kHz	8830kHz
Pass bandwidth	±7.5kHz or more at 3dB	±3.0kHz or more at 6dB	±1.2kHz or more at 6dB
Attenuation bandwidth	±30kHz or less at 40dB	±13kHz or less at 50dB ±16kHz or less at 60dB	±1.5kHz or less at 20dB ±2.2kHz or less at 60dB ±3.0kHz or less at 80dB
Ripple	1.0dB or less	1.0dB or less	2.0dB or less
Insertion loss	3.0dB or less	1.5dB or less	6.0dB or less
Guaranteed attenuation	70dB or more at fo+(500~1000kHz) 70dB or more at fo–(200~1000kHz)	70dB or more at fo±1MHz	80dB or more at fo±1MHz
Center frequency deviation	Within ±1.5kHz at 3dB	–	Within ±150Hz at 6dB
Terminating impedance	2kΩ±10%	1850Ω // 2pF	600Ω±5% // 15pF±5%

Item	CF1 : L72-0372-05	CF500, 501 : L72-0351-05
Nominal center frequency	455kHz	8830kHz
Pass bandwidth	±6kHz or more at 6dB	±50kHz or more at 3dB
Attenuation bandwidth	±13kHz or less at 50dB	35dB or more at +455kHz 45dB or more at +910kHz
Ripple	3dB or less (Within 455±4kHz)	1.0dB or less
Insertion loss	6.0dB or less	6.0dB or less
Guaranteed attenuation	35dB or more at fo±100Hz	–
Terminating impedance	2kΩ	330Ω

■ Receiver Front-End

The signal input to the TX-RX unit passes through the attenuator switching circuit and the 30MHz low-pass filter. The signal of less than 1.705MHz passes through the low-pass filter and about-20dB attenuator (the attenuator can be disabled by using a short jumper). The signal of 1.705MHz or higher passes through the short wave broadcast band trap (E type only) and medium wave broadcast band trap and passes through the nine-part band-pass filter. A PIN diode for switching band-pass filters is used at the input side to improve inter modulation.

If PRE-AMP is off, D30 and D32 turn on, and the signal passing through each band-pass filter goes to the quad-balance type first mixer by Q5 to Q8: 2SK520x4. If PRE-AMP is on, D43 and D45 turn on, and the signal of less than 21.5MHz passes through parallel amplifier Q17, Q18: 2SK520x2. This amplifier uses NFB to suppress the low-band gain and improve strong signal input characteristics. When the frequency is 22MHz or higher, D51 and D52 turn on, sensitivity-oriented MOS FET amplifier Q25: 3SK131 is selected.

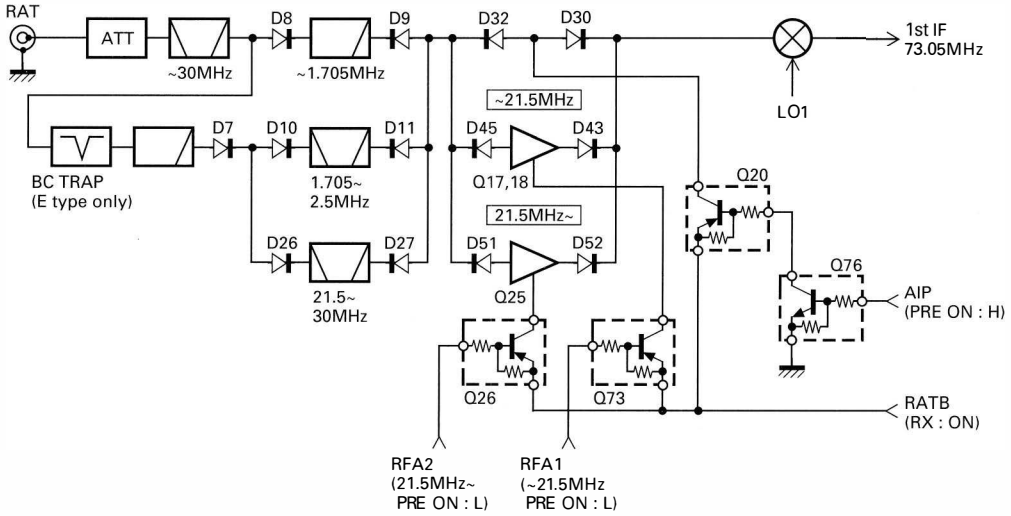

Fig. 6 Receiver front-end block diagram

CIRCUIT DESCRIPTION

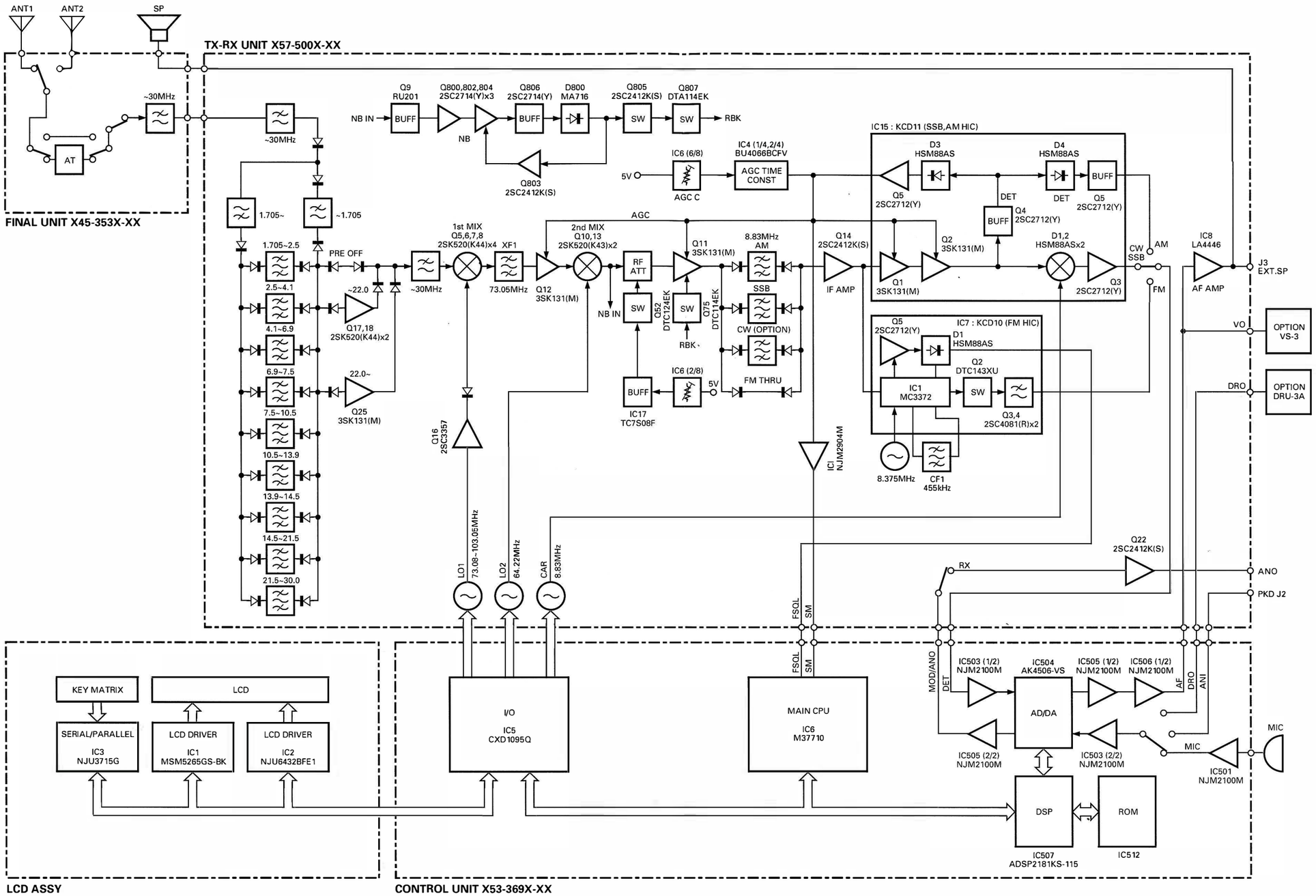

Fig. 5 Receiver section block diagram

CIRCUIT DESCRIPTION

■ Noise Blanker Circuits

The 8.83MHz IF signal generated by the second mixer is input to IF amplifier Q11: 3SK131, passes through buffer amplifier Q9: RU201, and amplified by noise amplifier Q800, Q802, and Q804: 2SC2714, passes through buffer amplifier Q806: 2SC2714, and noise-detected by D800: MA716. This signal switches Q805 and Q807 to control Q75 and Q15. It changes the source potential of the IF amplifier Q11 and blanks noise.

■ AGC Circuit

The part of the IF signal amplified by IC15: KCD11 is envelope-detected for the AGC to control the AGC voltage. The AGC voltage is applied to the first and second amplifiers in IC15, the first IF amplifier Q12: 3SK131, and the second IF amplifier Q11: 3SK131. The time constant is changed by analog switch IC4: BU4066BCFV.

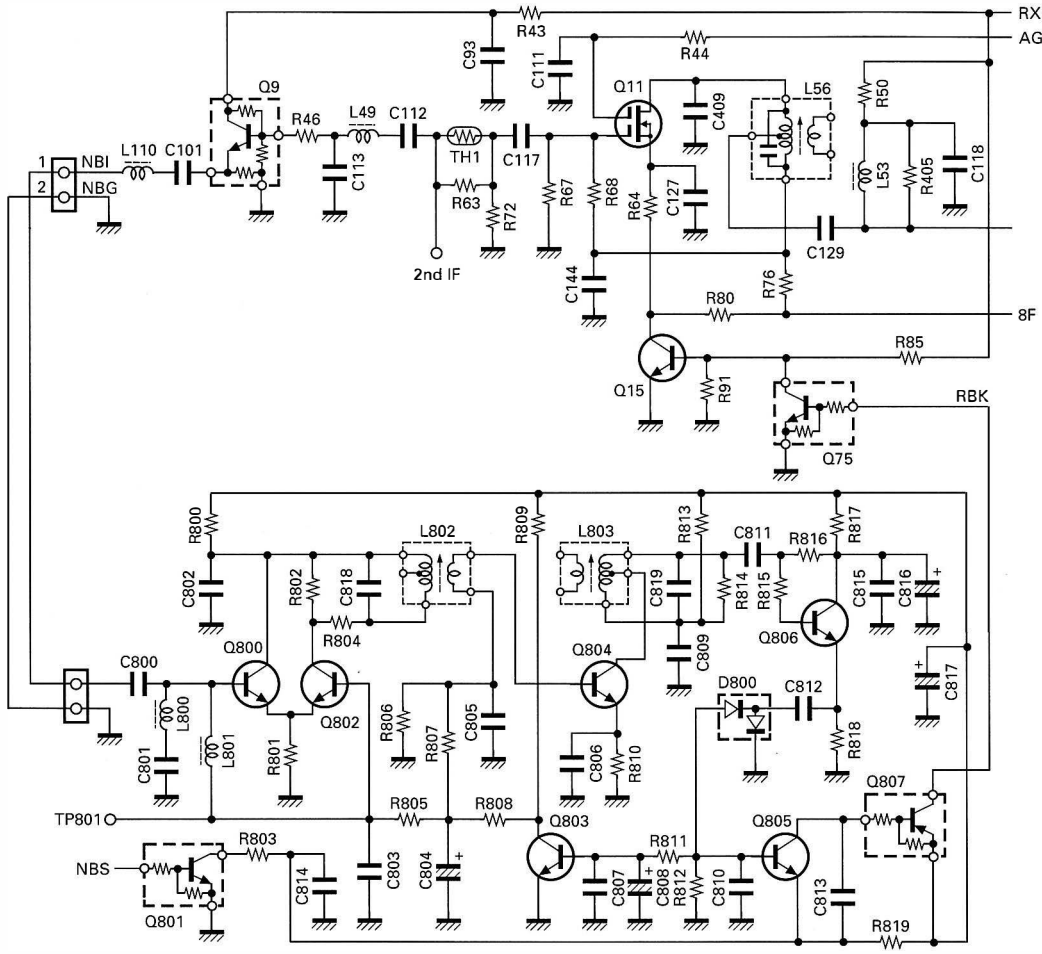

Fig. 7 Noise blanker circuits

CIRCUIT DESCRIPTION

■ Signal-Strength Meter Circuit

In modes other than FM, the AGC voltage is inverted and amplified by operational amplifier IC1: NJM2904M. This output is used as the signal strength meter voltage. In FM mode, the level detection output from IC7: KCD10 is used. The signal strength meter voltage in each mode is switched by analog switch IC4: BU4066BCFV and output to the control unit.

■ Squelch Circuit

In FM mode, the noise detection voltage (FSQL) output from IC7: KCD10 is sent to the control unit. In modes other than FM, the signal strength meter voltage is sent to the control unit. It is compared with the voltage proportional to the angle of the SQL VR to control squelch opening and closing. The microcomputer controls the delay time and hysterisis.

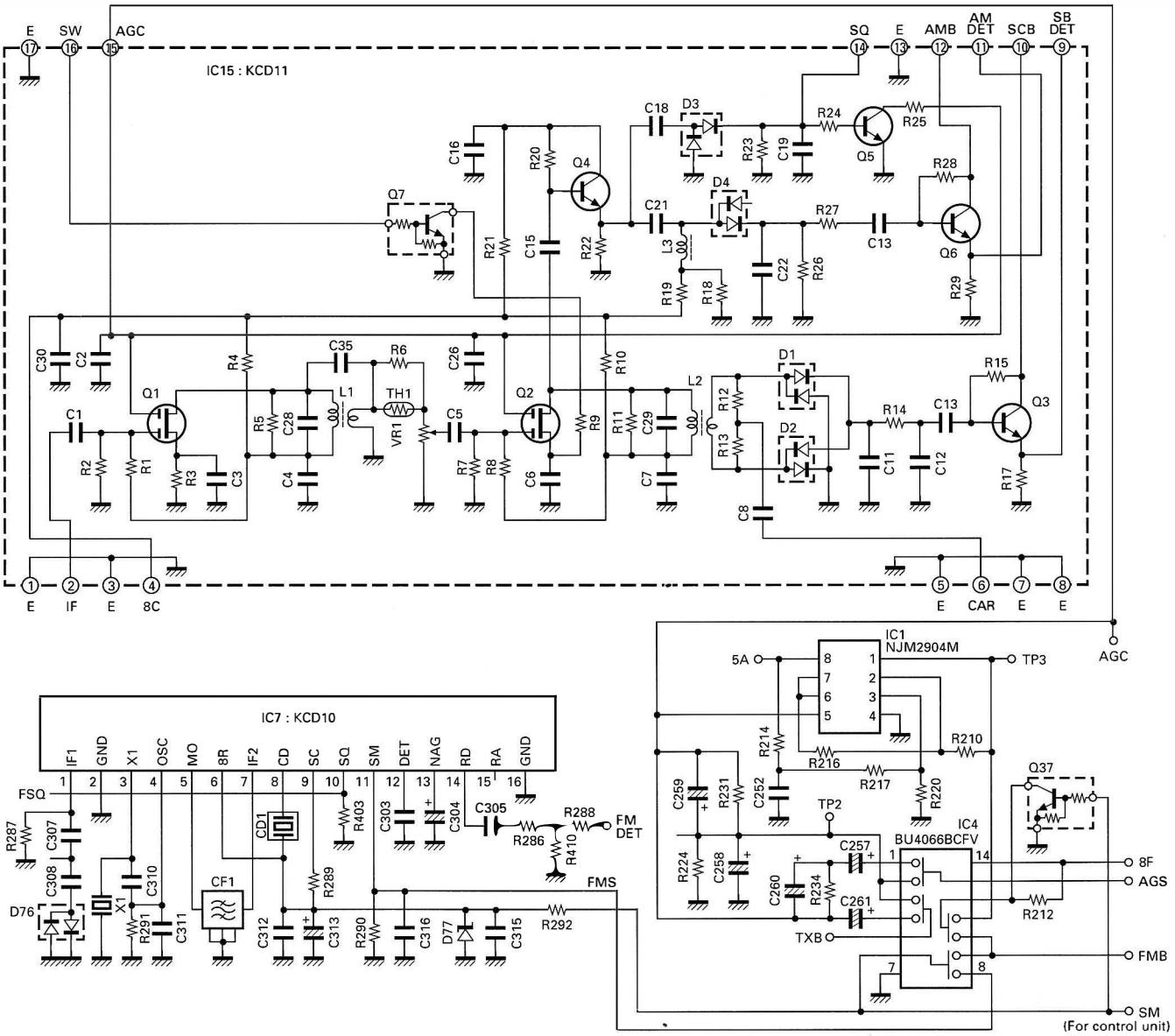

Fig. 8 AGC and S-meter circuits

CIRCUIT DESCRIPTION

Transmitter Circuit Configuration

Figure 9 is a block diagram of the transmitter circuit.

The audio signal from the microphone is AF-processed by the DSP in the control unit and enters CN15 (pin 4: MOD/ANO) of the TX-RX unit. The signal is split and directed to the SSB/AM and FM systems by IC12: BU4066BCFV.

In the SSB system, the signal is amplified by Q36 (2SC2712K(S)), balance-modulated with the CAR signal (8.83MHz) input from CN12 by IC2 (μPC1037GR), passes through Q38 (2SC2412K(S)), and enters the crystal filter. The SSB signal passing through the filter is amplified by Q29 (3SK131M). It is mixed with the LO2 signal (64.22MHz) from CN5 by Q27 and Q30 to produce a 73.05MHz signal. It is then mixed with the LO1 signal (78.08 to 103.05MHz) from CN2 by Q28, Q31 (3SK184(R)) to generate the desired signal. The signal passes through a band-pass filter, is amplified by Q35 (2SC2954) to produce the drive output, which is output from CN10 and goes to CN1 of the final unit.

The signal is amplified to 100W by Q1 to Q5. Harmonic components are attenuated by a low-pass filter. The signal passes through the forward/reflected wave detection circuit, AT voltage/current detection circuit, transmit/receive change relay K2, AT IN/THRU changeover relay K1, ANT 1/2 changeover relay K3, and is directed to the antenna connector.

In the AM mode, the signal is generated by breaking the balance of the carrier of SSB balance modulator IC2: μPC1037GR, and output through the same route as the SSB.

In the FM mode, the audio signal from the microphone connector is pre-emphasized and IDC-processed by the DSP in the control unit and goes to the TX-RX unit. The signal is separated from the SSB/AM system by IC12: BU4066BCFV, passes through W5, and enters the PLL unit to modulate LO2 (64.22MHz).

In the CW mode, the key input signal goes to IC5 in the control unit. The CKY signal output from IC6 switches Q24 and Q21 in the TX-RX unit to generate the CW signal.

■ ALC Circuit

The forward wave voltage (VSF) detected by the final unit is changed by a resister and goes to the differential amplifier comprised of Q1 and Q2. When the VSF rises, the base voltage of Q1 rises, so the emitter voltage of Q1 and Q2 increases and the current flowing through the base of Q2 decreases, and thus the collector voltage of Q2 rises. When this voltage exceeds $V_{BE} + V_E$ (about 2.4V) of Q3, the base current flows and the collector voltage to which ALC time constants C and R are connected drops.

The collector voltage change is shifted by Q4 and D2 and matched with the voltage for keying by Q5 and D3 to generate the ALC voltage. This ALC voltage lowers the second gate voltage of Q29 (3SK131(M)) of the TX-RX unit to activate the ALC.

In AM transmission, Q79 turns on and the ALC voltage is controlled by the average power. The reference voltage, V_{REF}, for the ALC is set by the adjusted value from the microcomputer and output from IC6.

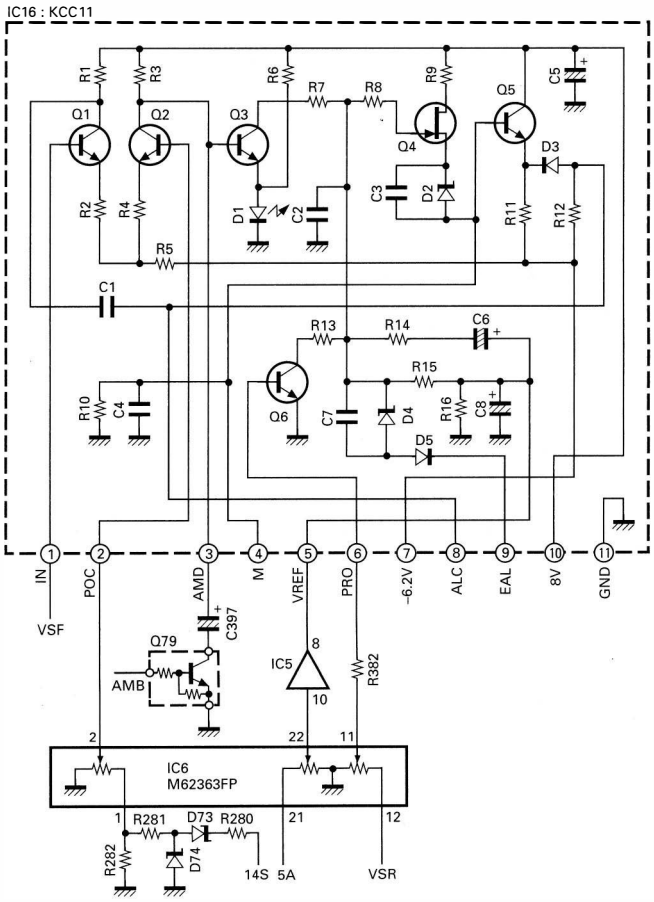

Fig. 10 ALC, Power control, SWR protection circuits

CIRCUIT DESCRIPTION

■ Power Control Circuit

Power is controlled by changing the base voltage (POC) of Q2 of the differential amplifier consisting of Q1 and Q2. The POC is set by the adjustment value from the microcomputer and output from IC6. As the base voltage (POC) of Q2 decreases, the emitter voltage of Q1 and Q2 decreases. This activates ALC and reduces the power even if the base voltage (VSF) of Q1 is low.

■ SWR Protection Circuit

When the reflected wave voltage (VSR) detected by the final unit rises, the PRO voltage output from IC6 increases, and Q6 turns on to reduce the voltage of the line of the ALC time constant circuit. The drive output decreases and the transmission power lowers. The PRO voltage is set according to the VSR by using the adjustment value from the microcomputer.

1) TX-AGC

The DSP controls the input level until it starts modulation. It is like AGC for the microphone amplifier. When the input level exceeds a certain level, the amplifier gain decreases to keep the modulator input level constant. This value is set to the ALC meter ZONE MAX. + 2dB. In SSB, the ALC is suppressed to ZONE MAX. + 2dB or less even if the MIC LEVEL is maximized or if the input level increases.

In FM, the level is suppressed so that it does not exceed the maximum occupation frequency bandwidth of about 4.4kHz.

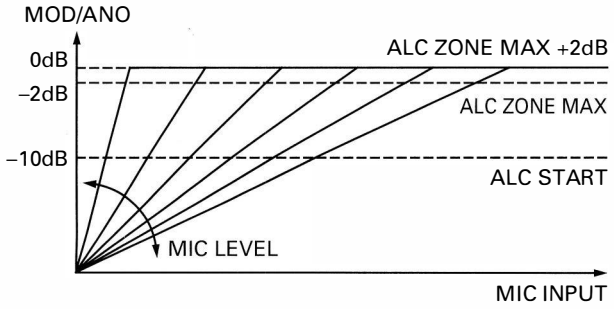

Fig. 11

■ Standby Control Timing

Standby control timing is determined by using software for the main CPU in the control unit. The control signals for the control unit are listed below. (See Figure 12 for each timing chart.)

SS : Standby switch input signal. Active low.
KEY : Keying input signal from the keyer. Active low.
TXC : Transmit output signal. Active high. Same timing as TXB.
CKY : Output signal. Active high.

With the SS line

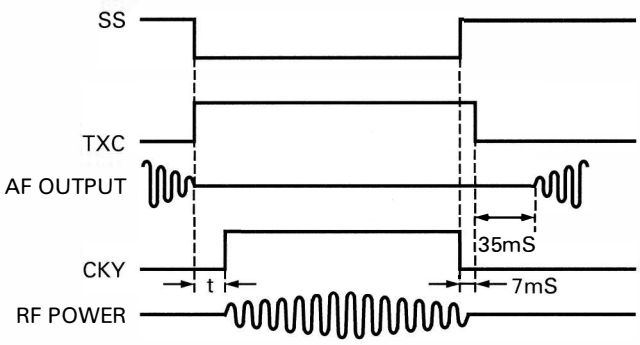

	t	
Menu No.39 "LINEAR"	OFF	10mS
	ON	25mS

By full break-in

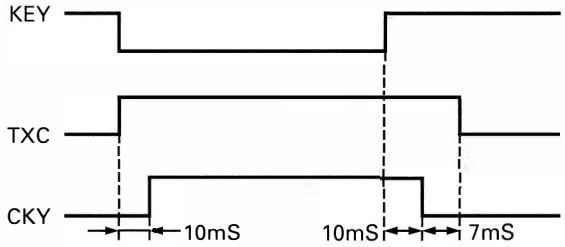

By semi break-in

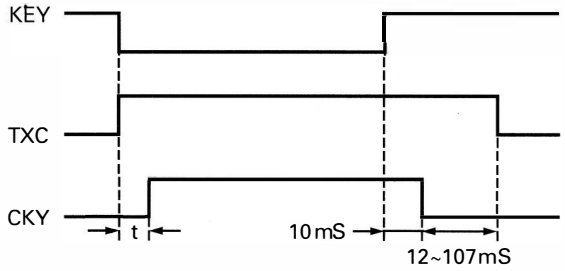

Fig. 12 Transmit/receive signal timing chart

CIRCUIT DESCRIPTION

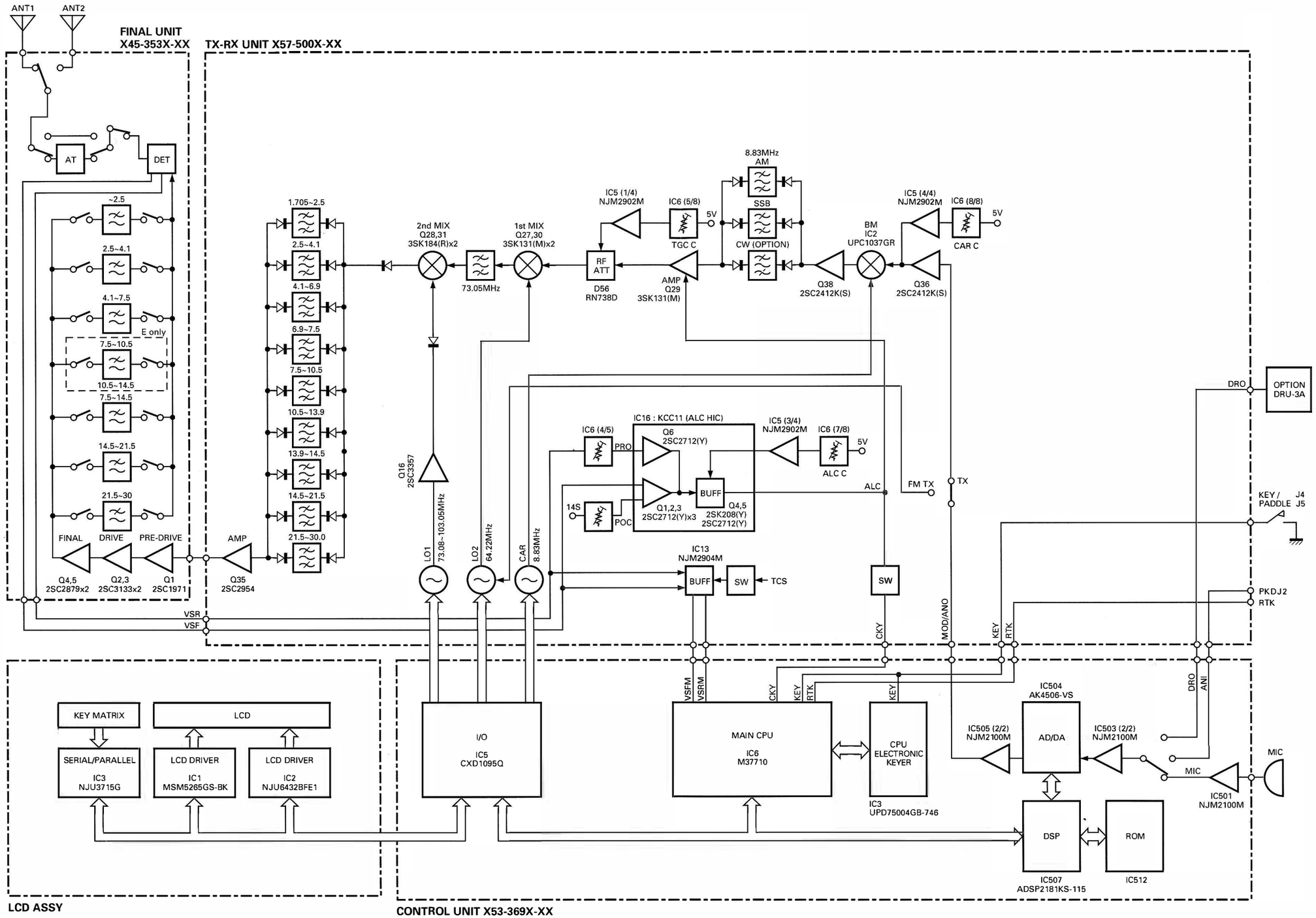

Fig. 9 Transmitter section block diagram

CIRCUIT DESCRIPTION

■ Various Control Circuits by the Digital-to-Analog Converter

The circuits whose signal level was varied directly with a volume control or adjusted with a semi-fixed volume can be controlled by a microcomputer by using an eight-channel digital-to-analog converter.

The digital-to-analog converter (M62363FP) is a ladder-type variable attenuator having independent eight-channel inputs. It is used to output an output voltage by entering a fixed voltage or used as a volume by entering the control signal directly. The table below lists controls in each channel.

CH No.	Input pin No.	Output pin No.	Signal name	Control	Output destination
1	1	2	POC	Reference voltage for power control	IC16 ALC circuit differential input
2	4	3	IFATT1	21.5 to 30MHz IF gain reduction	IC17 AND gate
3	9	10	NC	Not used	
4	12	11	PRO	Reflected wave protection adjustment	IC16 protection input
5	13	14	TGC	Gain correction between bands and during power control	IC5 operational amplifier
6	16	15	AGC	AGC reference voltage adjustment	AGC circuit
7	21	22	ALC	ALC reference voltage adjustment	IC5 operational amplifier
8	24	23	CAR	CAR level adjustment	IC2 balanced modulator

Table 4 Digital-to-analog converter control

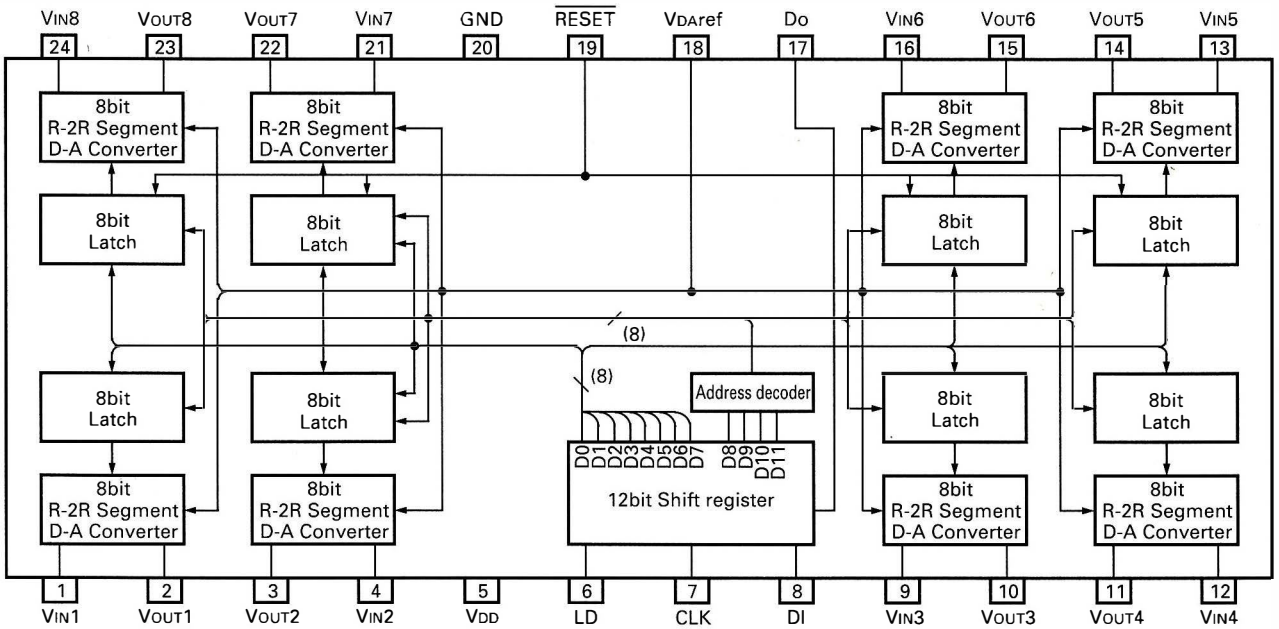

Fig. 13 M62363FP block diagram

CIRCUIT DESCRIPTION

Digital Control

■ Overview

The TS-570D digital control circuit has multiple chips centered around the main CPU (IC6: M377010EFB), and consists of an electronic keyer microcomputer (IC3: UPD75004GB-746), an extended I/O (IC5: CXD1095Q) and DSP (IC507: ADSP2181KS-115). A block diagram of digital control is shown below.

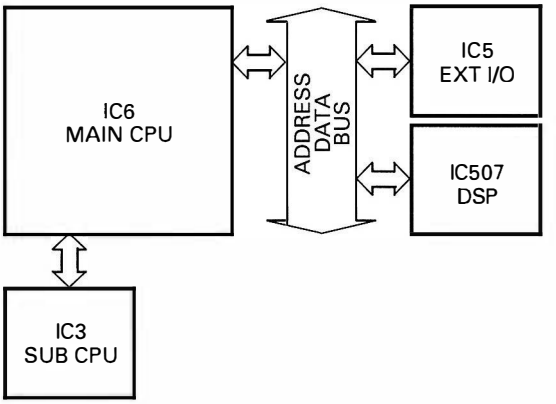

Fig. 14 Digital control section block diagram

■ Address Control Circuit

The main CPU operates in the single-chip mode using the internal ROM and RAM. It transfers data from or to the extended I/O and DSP through external address and data buses.

■ Encoder Circuit

The main encoder is a magnetic rotary encoder, and the MULTI and RIT encoders are contact-type rotary encoders.

The encoder pulses are read and processed directly by the main CPU.

■ System Reset and RAM Backup

The voltage monitor circuit (Q5, Q8, D6, R8) monitors the power supply voltage. If the voltage drops, the circuit outputs a low signal to the INT0 port of the main CPU to stop operation. At the same time, D6 switches the RAM backup power to a lithium battery.

If the power supply voltage becomes normal, a high signal is input to the INT0 port, the main CPU is initialized by the reset signal generation IC (IC4: PST9121NR) after the time constant set by C12 and C13, and the operation resumes.

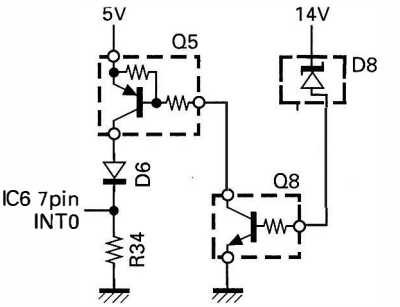

Fig. 15 Reset, backup circuits

■ Analog Signal Input

The main CPU incorporates a four-channel analog-to-digital (A/D) converter and a multiplexer (IC7 and IC8: TC4052BF) for entering 16-channel analog signals. Incoming analog signals are converted to digital values by the main CPU, which are used as digital data.

■ Display

The TS-570D uses a positive LCD and a semi-transparent display. The LCD is lighted with half a duty by the LCD driver.

■ PLL and DDS Data

The TS-570D has two PLLs and two DDSs in the PLL unit of the TX-RX unit. The main CPU sends data to the PLL ICs and DDS ICs according to the displayed frequency. The PLL ICs output unlock (UNL) signals. If one of the PLLs unlocks, the display shows that the PLL is unlocked.

■ AT Control

The AT controlled by entering amplitude difference data (AMD) and phase difference data (PHD) to the main CPU, controlling the serial/parallel converter in the final unit, and changing the C capacity. The main CPU stores the serial/parallel converter data in each band, and whenever the frequency changes, the CPU outputs the data automatically to optimize antenna matching. The details of control of AMD terminal input and PMD terminal input are given below.

When AMD input is low, the CO count decreases.
When AMD input is high, the CO count increases.
When PMD input is low, the CI count decreases.
When PMD input is high, the CI count increases.

CIRCUIT DESCRIPTION

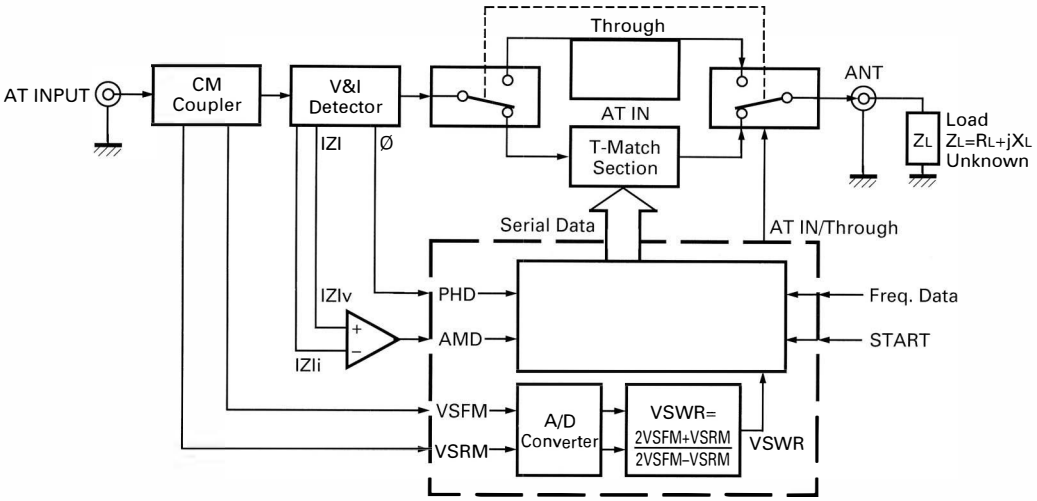

Fig. 16 AT control block diagram

■ IF Filter Switching

The IF filter bandwidth changes automatically as the mode changes. Its details are given below.

IF filter bandwidth	YK-88SN-1 (1800Hz)		YK-88C-1 (500Hz)		YK-88CN-1 (270Hz)
	CW (Hz)	FSK (Hz)	CW (Hz)	FSK (Hz)	CW (Hz)
2.4kHz	2.0k	1.5k	1.0k	1.0k	300 or more
Bandwidth of the installed filter	1.0k or less	1.0k or less	600 or less	500 or less	200 or less

■ Receive Band-Pass Filter Selection

The RF BPF signal from the control unit is sent to the TX-RX unit as serial data. The serial-to-parallel converter in the TX-RX unit converts serial data to parallel data and switches between band-pass filters.

■ Transmit Low-Pass Filter Selection

The LPF signal from the control unit is sent to the final unit as serial data. The serial-to-parallel converter in the final unit converts serial data to parallel data and switches between low-pass filters.

■ Electronic Keyer

The TS-570D uses a dedicated IC (IC3: UPD75004GB-746) to control the electronic keyer. The main CPU reports CH1 to CH3 switch operations to the electronic keyer IC (keyer microcomputer).

CIRCUIT DESCRIPTION

■ Band Data

Frequency (MHz)		RF BPF	LPF		VCO	PLL n
Lower limit	Upper limit			E type		
0.030000	0.489999	1	1	1	A	15
0.490000	0.989999					16
0.990000	1.489999					17
1.490000	1.705000					18
1.705001	1.989999	2				
1.990000	2.489999					19
2.490000	2.499999					20
2.500000	2.989999	3	2	2		
2.990000	3.489999					21
3.490000	3.989999					22
3.990000	4.099999					23
4.100000	4.489999	4	3	3		
4.490000	4.989999					24
4.990000	5.489999					25
5.490000	5.989999					26
5.990000	6.489999					27
6.490000	6.899999					28
6.900000	6.989999	5				
6.990000	7.489999					29
7.490000	7.499999					30
7.500000	7.989999	6	5	4		
7.990000	8.489999					31
8.490000	8.989999					32
8.990000	9.489999					33
9.490000	9.989999					34
9.990000	10.489999					35
10.490000	10.499999					36
10.500000	10.989999	7		5		
10.990000	11.489999				B	37
11.490000	11.989999					38
11.990000	12.489999					39
12.490000	12.989999					40
12.990000	13.489999					41
13.490000	13.899999					42
13.900000	13.989999	8				

Frequency (MHz)		RF BPF	LPF		VCO	PLL n
Lower limit	Upper limit			E type		
13.990000	14.489999	8	5	5	B	43
14.490000	14.499999					44
14.500000	14.989999	9	6	6		
14.990000	15.489999					45
15.490000	15.989999					46
15.990000	16.489999					47
16.490000	16.989999					48
16.990000	17.489999					49
17.490000	17.989999					50
17.990000	18.489999					51
18.490000	18.989999					52
18.990000	19.489999					53
19.490000	19.989999					54
19.990000	20.489999					55
20.490000	20.989999					56
20.990000	21.489999					57
21.490000	21.499999					58
21.500000	21.989999	10	7	7		58
21.990000	22.489999					59
22.490000	22.989999					60
22.990000	23.489999					61
23.490000	23.989999				C	62
23.990000	24.489999					63
24.490000	24.989999					64
24.990000	25.489999					65
25.490000	25.989999					66
25.990000	26.489999					67
26.490000	26.989999					68
26.990000	27.489999					69
27.490000	27.989999					70
27.990000	28.489999					71
28.490000	28.989999					72
28.990000	29.489999					73
29.490000	29.989999					74
29.990000	30.000000					75

CIRCUIT DESCRIPTION

Control Unit (DSP)

■ Outline

The TS-570D uses the DSP to process audio signals the detection output of the conventional models. The processes are listed below. A block diagram of the DSP and a function block diagram of processes in the DSP are shown below for reference.

- Sidetone and beep generation
- Transmit/receive filter processing
- Voice equalizing processing
- Speech processing
- VOX processing
- Mic amplifier AGC processing
- CW tune function
- Noise and interference processing (noise reduction, beat cancel)
- CTCSS decoder

The DSP circuits are divided into an analog section that processes analog signals and a digital section that processes digital data. The analog section contains a buffer amplifier (IC503, IC505, IC506: NJM2100M) for CODEC input/output, and analog switch (IC502: BU4066BCFV). The digital section contains a clock dividing circuit which supplies clock signals to the CODEC and DSP. The CODEC (IC504: AK4506-VS) interfaces between the analog and digital sections.

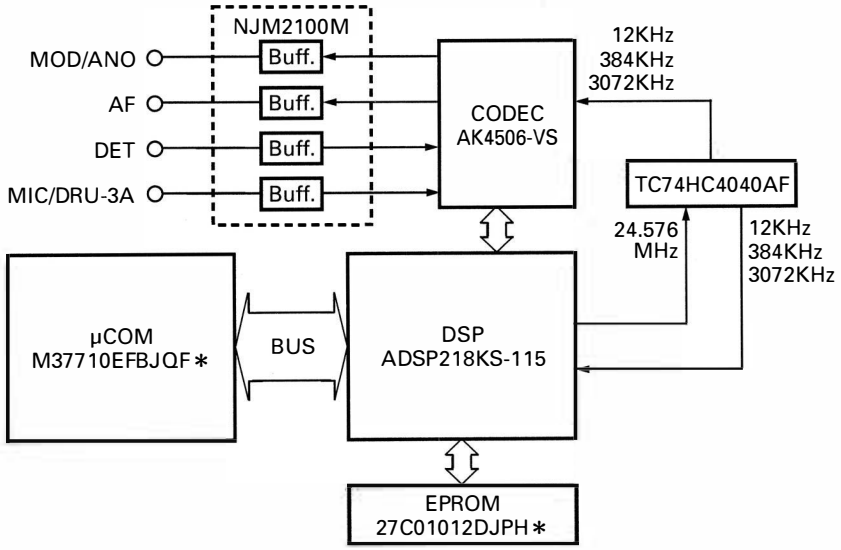

Fig. 17 DSP section block diagram

CIRCUIT DESCRIPTION

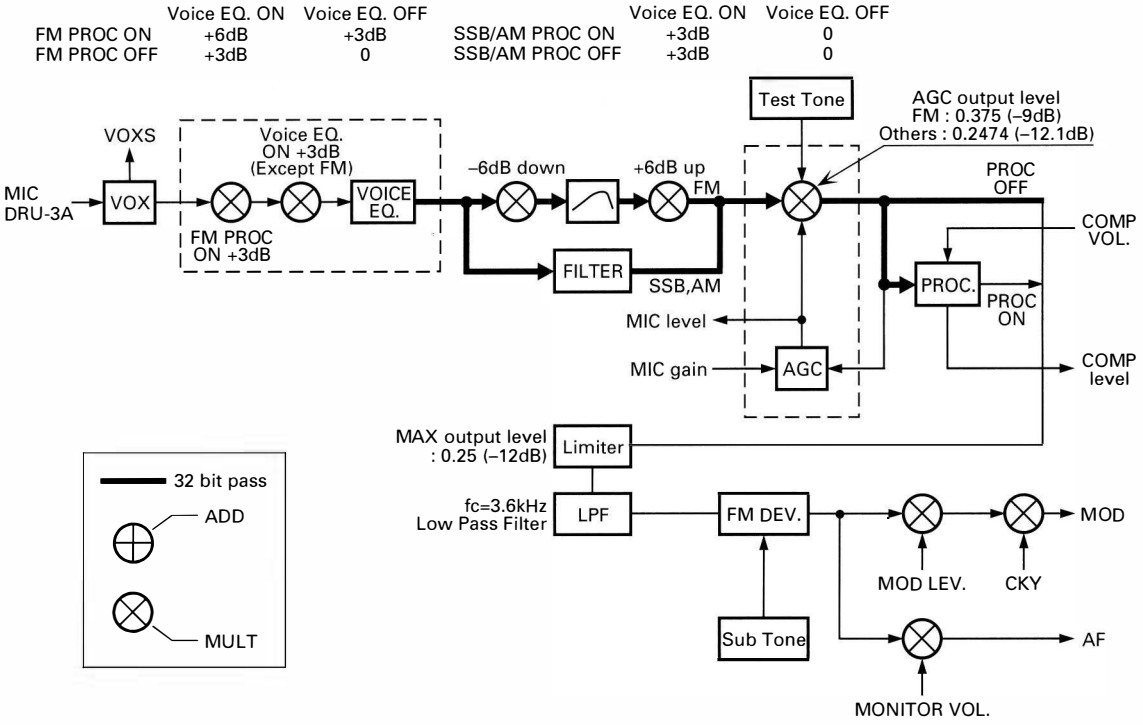

Fig. 18 DSP function block diagram (TX)

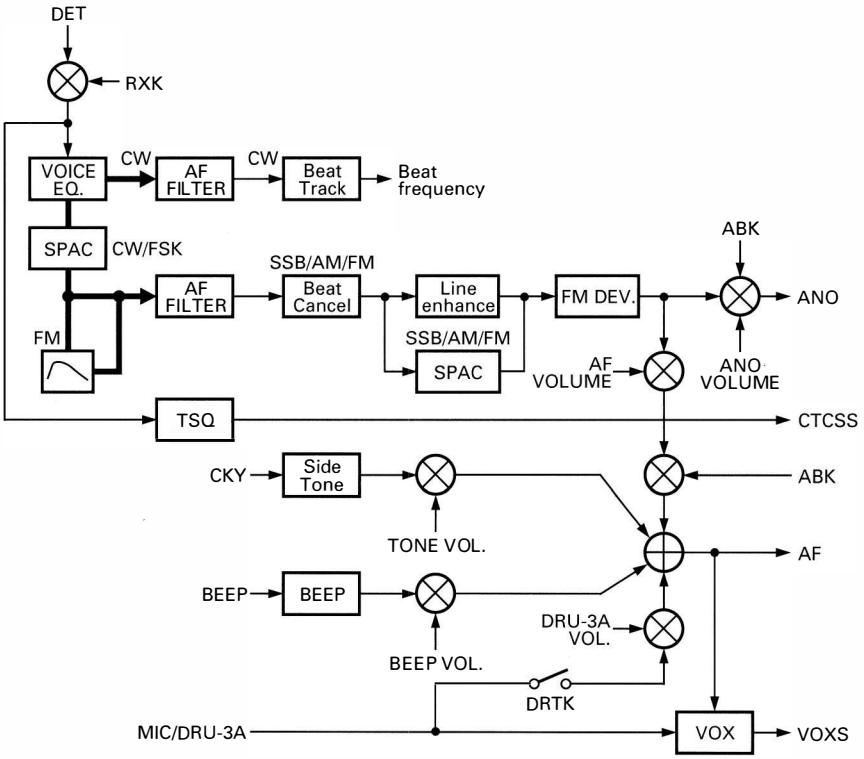

Fig. 19 DSP function block diagram (RX)

CIRCUIT DESCRIPTION

■ Digital Unit

The digital unit consists of a DSP (IC507: ADSP2181KS-115), an EPROM (IC512: AM27C010-120DC), a clock dividing logic (IC508: TC74HC4040AF, IC511: TC7SO4F), and CODEC (IC504: AK4506-VS), which interfaces with the analog section.

The DSP is a 16-bit fixed-decimal DSP. It operates with the 12.288MHz clock, but the internal clock is 24.576MHz. The internal clock is output from pin 22 (CLKOUT) of the DSP to the clock dividing logic. The DSP IDMA (Internal Direct Memory Access) function is used to transfer commands between the DSP and microcomputer.

The clock dividing logic supplies 3072kHz, 384kHz, and 12kHz to the CODEC using clocks from the DSP. It also supplies the same clock to the DSP to synchronize with the CODEC.

The CODEC is a 16-bit ΔΣ CODEC for audio equipment. There are two channels: R and L. The R channel is used for the microphone input signal and the L channel is used for the receive signal. The CODEC converts analog signals to digital signals or digital signals to analog signals based on the clock from the clock dividing logic with a 12kHz sampling frequency.

■ Flow of Transmit/Receive Signals

The flow of transmit/receive signals is explained below, together with the analog and digital units.

The flow of receive signals is explained first. The receive signal input from pin 6 (DET) of CN502 is amplified by IC503: NJM2100M. If a strong signal is input to DET, its amplitude is limited to prevent entering of signals which exceed the input range into the CODEC (IC504: AK4506-VS). It is then converted to digital data by the CODEC with the 12kHz sampling frequency. This data is transferred from the CODEC to the DSP serially, and operated by the DSP.

The digital data processed by the DSP is sent from the DSP to the CODEC serially and converted to an analog signal. The signal passes through the three-degree low-pass filter IC505 and IC506: NJM2100M to eliminate alias components. The resulting signal is output from pin 1 (AF) of W501, amplified by the AF amplifier (IC8: LA4446) in the TX-RX unit, and output to the speaker and headphone.

The flow of transmit signals is explained below. If the mode is SSB, FM, or AM, the signal from the microphone is input. The signal enters through CN503. The signal is amplified by amplifier IC501: NJM2100M, and goes to the analog switch (IC501: BU4066BCFV). The analog switch is used to switch between the microphone signal, the signal from the DRU, and packet signal. The signal passing through the analog switch is amplified by amplifier IC503: NJM2100M. If there is a strong signal, the amplitude is limited so that the signal exceeding the input range does not enter the CODEC. The CODEC then converts it to digital data with a 12kHz sampling frequency. The data is transferred from the CODEC to the DSP to carry out operations.

Digital data operated by the DSP is transferred from the DSP to the CODEC to convert it to an analog signal. The signal passes through the three-degree low-pass filter IC505: NJM2100M to eliminate alias components. The signal is output pin 4 (MOD/ANO) of CN502 to the TX-RX unit.

■ Sidetone Signal Flow

When the electronic keyer is pressed, the sidetone is output. The sidetone is processed by the DSP. Sidetone data, which is generated by the DSP, is added with digital data of the receive signal and is output to the speaker or headphone in the same process as the receive signal.

■ Beep Signal Flow

When pin 126 (BEEP) of the DSP goes high, the DSP processes and outputs beep data in the same process as the side tone. The DSP can set the frequency and volume of the beep produced with a command.

■ Digital Recording Unit (DRU) Recording and Playback

The DRU is controlled by the microcomputer. During the DRU recording, the microphone signal amplified by the amplifier (IC501: NJM2100M) is input to the DRU and recorded. During DRU playback, the playback signal is input to the CODEC by changing the analog switch (IC502: BU4066BCFV). When the DSP receives a "VOX ON and DRU playback" command from the microcomputer, VOXS data in the DSP goes high. When the microcomputer reads the data, it sets the transceiver to transmit mode. This transmit operation does not occur according to the playback sound level of the DRU. Even if no sound is recorded, the transceiver enters the transmit mode when a DRU playback command arrives with VOX ON.

CIRCUIT DESCRIPTION

■ VS-3 Audio Signal Flow

The audio signal output from the VS-3 is not processed by the DSP. The signal is amplified by the AF amplifier and output to the speaker or headphone. The VS-3 is controlled by the microcomputer.

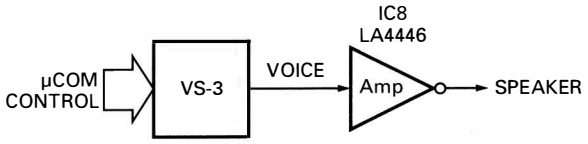

Fig. 20 VS-3 audio signal flow

■ Commands and Data Transferred to or from the Microcomputer

The commands sent from the microcomputer to the DSP and data sent from the DSP to the microcomputer to indicate the microcomputer and DSP processing are described below.

1) DSP commands

Address (HEX)	Bit (HEX)	DSP-MCU	Accept	Function (Parameter)
C+0		COM	IRQ2	Parameter processing command (The DSP is cleared after the command is executed.)
C: Command		←		
Area base	0	Clear		Receive mode
pointer	1	→		
=0000	2			TX filter
	3			Voice equalizer
	4			RX filter
	5			CW pitch
	6			Transmit mode
	7			AF VOL
	8			Noise/interference elimination mode
	9			SPAC correlation time
	A			FM subtone frequency
C+1		←	Everytime	Flag 1
	0			
	1			SIC Sidetone ctl 0 : OFF, 1 : ON (Sidetone permission)
	2			
	3			DRTK DRU-3A microphone 0 : OFF, 1 : ON (Switch the microphone gain for DRU)
	4			FDEV FM deviation 0 : Narrow, 1 : Wide
	5			CWBT CW tune 0 : OFF, 1 : ON
	6			STC FM subtone 0 : OFF, 1 : ON
	7			PRC Processor 0 : OFF, 1 : ON
	8			VOX VOX 0 : OFF, 1 : ON
C+2		←	Everytime	Flag 1
	0			LITRC Line enhancer trace 0 : ON, 1 : OFF
	1			BCTRC Beat canceler trace 0 : ON, 1 : OFF
C+3		←	IRQ2	TX mode
	0~3			0 : SSB 1 : SLEEP 2 : CW 3 : AM
				4 : FM 5 : FSK 6 : SLEEP 7 : TEST
C+4		←	IRQ2	RX mode
	0~3			0 : SSB 1 : SLEEP 2 : CW 3 : AM
				4 : FM 5 : FSK 6 : SLEEP 7 : TEST
C+5		←	IRQ2	TX filter
	0~4			Band
C+6		←	IRQ2	TX voice equalizer
	0~2			TX voice equalizing ON/OFF and selection
C+7		←	IRQ2, MODE	RX SSB/AM filter 1
	0~4			SSB/ AM low cut
C+8		←	IRQ2, MODE	RX SSB/AM filter 2
	0~4			SSB/AM high cut

CIRCUIT DESCRIPTION

Address (HEX)	Bit (HEX)	DSP-MCU	Accept	Function (Parameter)
C+9		←	IRQ2	RX CW filter
	0~3		MODE	CW center
	4~7			CW bandwidth
C+A		←	IRQ2	RX FSK filter
	0~1		MODE	FSK bandwidth
	2~3			FSK center
C+B		←	IRQ2, MODE	CW pitch
	0~3			400Hz~1000Hz, 50Hz step (13)
C+C		←	IRQ2, MODE	FSK setting
	0~1			FSK shift width 0 : 170Hz, 1 : 200Hz, 2 : 425Hz, 3 : 850Hz
	2			FSK tone 0 : Low, 1 : High
	3			FSK reverse 0 : Normal, 1 : Reverse
	4			FSK polarity 0 : Normal, 1 : Invert
C+D		←	IRQ2	FM subtone frequency (Hz)
	0~5			0 : 067.0 1 : 071.9 2 : 074.4 3 : 077.0 4 : 079.7 5 : 082.5
				6 : 085.4 7 : 088.5 8 : 091.5 9 : 094.8 10 : 097.4 11 : 100.0
				12 : 103.5 13 : 107.2 14 : 110.9 15 : 114.8 16 : 118.8 17 : 123.0
				18 : 127.3 19 : 131.8 20 : 136.5 21 : 141.3 22 : 146.2 23 : 151.4
				24 : 156.7 25 : 162.2 26 : 167.9 27 : 173.8 28 : 179.9 29 : 186.2
				30 : 192.8 31 : 203.5 32 : 210.7 33 : 218.1 34 : 225.7 35 : 233.6
				36 : 241.8 37 : 250.3 38 : 1750.0
C+E		←	Everytime	Beep frequency
	0~E			f = n x 12000 ÷ 2^16 (0Hz~6kHz)
C+F		←	Everytime	PROC compression level
	0~E			0 : 0dB~S7FFF : 30dB : semi log
C+10		←	IRQ2	AF VOL
	0~7			0 : –∞dB~255 : 0dB : Func
C+11		←	Everytime	DRU-3A VOL
	0~E			0 : –∞dB~S7FFF : 0dB : linear
C+12		←	Everytime	Sidetone VOL
	0~E			0 : –∞dB~S7FFF : 0dB : linear
C+13		←	Everytime	Beep VOL
	0~E			0 : –∞dB~S7FFF : 0dB : linear
C+14		←	Everytime	ANO VOL
	0~E			0 : –∞dB~S7FFF : 0dB : linear
C+15		←	Everytime	MOD level
	0~E			0 : –∞dB~S7FFF : 0dB : linear
C+16		←	Everytime	TX AF AGC gain : MIC
	0~E			0 : –∞dB~S7FFF : 0dB : semi log
C+17		←	Everytime	TX AF AGC gain : DRU-3A
	0~E			0 : –∞dB~S7FFF : 0dB : semi log
C+18		←	Everytime	TX AF AGC gain : ANI
	0~E			0 : –∞dB~S7FFF : 0dB : semi log
C+19		←	Everytime	Monitor VOL
	0~E			0 : –∞dB~S7FFF : 0dB : linear
C+1A		←	Everytime	VOX gain
	0~E			0 : –∞dB~S7FFF : 0dB : semi log
C+1B		←	IRQ2	Noise/interference elimination mode setting 0 : OFF, 1 : ON
	0			Noise reduction (Adaptive filter : Line enhancer)
	1			Beat canceler (Adaptive filter)
	2			Noise reduction (SPAC)
C+1C		←	Every time	S-meter
	0~9			0 : 0~1023 : Full
C+1D		←	IRQ2	SPAC correlation time
	0~3			0 : 2msec 1 : 5msec 2 : 7.5msec 3 : 10msec 4 : 15msec
				5 : 20msec 6 : 25msec

CIRCUIT DESCRIPTION

Address (HEX)	Bit (HEX)	DSP-MCU	Accept	Function (Parameter)
C+1E	0~7	→	Updated at fs intervals	PROC compression level 0 : 0dB~S7FFF : 30dB : semi log
C+1F	0 1	→	Updated at fs intervals	Status VOXS 0 : OFF, 1 : ON CTCSS 1 : Det.
C+20	0~3	←	IRQ2	Adjustment mode 0 : Tone output, The other : Tone stop
C+21	0~E	←	Everytime	Test tone frequency 1 0 : OFF, 1 : f = n x 1200 ÷ 2^16 (0Hz~6kHz)
C+22	0~E	←	Everytime	Test tone frequency 1 0 : OFF, 1 : f = n x 1200 ÷ 2^16 (0Hz~6kHz)
C+23	0~F	→	Everytime	CW beat tracking : Error frequency 16 bits with a sign : f = ±n x 3000 ÷ 2^15
C+24	0~2	←	IRQ2	RX voice equalizer RX voice equalizing ON/OFF and selection
C+25	0~F	←	Everytime	RF gain VOL 0 : −∞dB~255 : 0dB : Func
C+26	0~E	→	Updated at fs intervals	CW beat tracking frequency 16 bits with a sign : f = n x 12000 ÷ 2^16
C+27	0~E	←	Everytime	Line enhancer tracking speed 0 : Default, 1 : Slow~S7FFF : Fast
C+28	0~E	←	Everytime	Beat canceler tracking speed 0 : Default, 1 : Slow~S7FFF : Fast
C+29				Reserve
C+2A				Reserve
C+2B				Reserve
C+2C				Reserve
C+2D				Reserve
C+2E				Reserve
C+2F				Reserve

■ Other Circuits in the Analog Unit

Several circuits in the analog unit have already been described in the section of the flow of transmit/receive signals. This section explains the other circuits.

1) Reference voltage circuit

Since the TS-570D does not have any negative power supply, it uses a 2.5V reference voltage, which is half the 5V power supply voltage, for operational amplifiers, to process analog signals linearly. The reference voltage circuit is shown below. 2.5V is produced by dividing the power supply voltage with R539 and R540. The voltage is supplied to the circuitry through a buffer amplifier IC506 : NJM2100M.

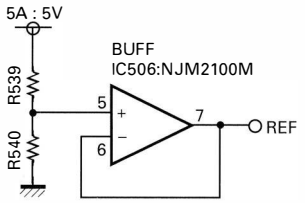

Fig. 21 Reference voltage circuit

2) Pop sound mute circuit

The mute circuit shown below reduces the pop sound when the power switches off. If pin 23 (AMU) of CN3 is low, the mute circuit consisting of Q11, Q12: DTC143EK mutes the AF amplifier (IC8: LA4446) and suppresses the pop sound when the power turns on.

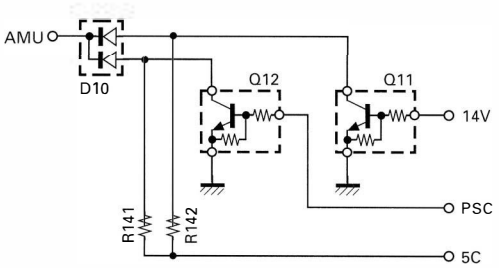

Fig. 22 Pop sound mute circuit

CIRCUIT DESCRIPTION

■ New Functions

The DSP used in the TS-570D processes detected AF signals. The DSP has various functions for processing digital signals. This section describes the functions and other features.

1) Transmission filter processing

Three types of filters are used for transmission: transmission sound quality setting filter, splatter filter, and speech processor filter. Each of the filters is outlined below.

- Transmission sound quality setting filter
  Comprised of 8-degree IIR filters.
  In SSB/AM, it consists of a band-pass filter, the band is specified by the bandwidth and low edge frequency.
  In FM, it consists of a pre-emphasis filter.
- Splatter filter
  This filter also functions as an FM splatter filter. It eliminates AF-AGC and limiter distortion.
  SSB/AM/FM: 3.6kHz
- Speech processor filter
  The input filter is IIR, and the output filter is FIR.
  The bandwidth of this filter is linked with that of the transmission sound quality setting filter.

- **Transmission sound quality setting filter degree/attenuation**

Type	Comprise	Degree	Ripple (dB)	Attenuation (dB)
BPF	IIR	8	0	L : Simple attenuation H : 60
FM pre-emphasis	IIR	1+3	–	–
Splatter filter	IIR	6	0	Simple attenuation
PROC-IN : Low-LPF	IIR	6	0	20/45
PROC-IN : Mid-BPF	IIR	6	0	28/53
PROC-IN : Hi-BPF	IIR	6	0	30/60
PROC-OUT : Low-LPF	FIR	48	0.5	45
PROC-OUT : Mid-LPF	FIR	48	0.5	40/45
PROC-OUT : Hi-LPF	FIR	48	0.5	20/45/20

2) Receive filter processing

Filters used for reception include a high-pass filter and a low-pass filter for slope tuning and a band-pass filter for CW/FSK mode. 10-degree IIR filters are used as the low-pass filter, high-pass filter, band-pass filter, delay equalizer, and deemphasis filter. They are outline below.

- SSB, AM, FM
  AF high-pass filter/low-pass filter for slope tuning
- CW, FSK
  AF BPF
  The delay equalizer improves the group delay characteristics. The maximum signal delay time is 30ms.
- FM
  A de-emphasis filter is inserted before the slope tuning filter.

- **Degree/attenuation**

Mode	Type	Comprise	Degree	Ripple (dB)	Attenuation (dB)
SSB/AM	LPF	IIR	6	0	70
SSB/AM	HPF	IIR	1~4	0	Simple attenuation/70
CW/FSK	BPF	IIR	6~8	0	65
CW/FSK	Equalizer	IIR	2~4	All pass	All pass
FM	–	IIR	7	De-emphasis filter	–

- **Band/setting code**

Blank parts cannot be set. The CW low edge: 200Hz or higher

No.	SSB/AM Low cut	SSB/AM Hi cut	CW Center	CW Width	FSK BPF Center	FSK BPF Width
0	10 (0)	1.0k	400	50	2.2100k/1.3600k	250
1	50	1.1k	450	100	2.2250k/1.3750k	500
2	100	1.2k	500	200	2.3375k/1.4875k	1.0k
3	150	1.3k	550	300	2.5500k/1.7000k	1.5k
4	200	1.4k	600	400		
5	250	1.5k	650	600		
6	300	1.6k	700	1k		
7	350	1.7k	750	2k		
8	400	1.8k	800			
9	450	2.0k	850			
10	500	2.2k	900			
11	550	2.4k	950			
12	600	2.6k	1.0k			
13	650	2.8k				
14	700	3.0k				
15	750	3.2k				
16	800	3.4k				
17	850	3.6k				
18	900	4.0k				
19	950	4.4k				
20	1.0k	5.0k				
21	PKT-1					
22	PKT-2					
23	PKT-3					

CIRCUIT DESCRIPTION

3) Voice equalizing processing

A filter for voice equalizing processing is used to change the transmission sound quality. It consists of 32-tap FIR filters. The characteristics of the filters are shown below. To increase the voice equalizing effect, the input signal is increased by 3dB and then filtered when high boost, formant pass, or bass boost is set.

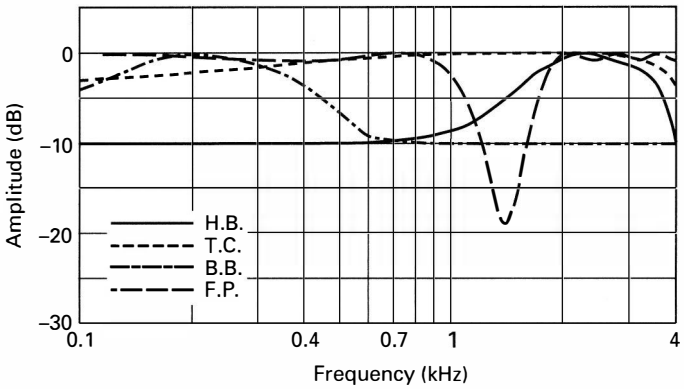

Fig. 23

	TX		RX	
0	Flat	0dB	Flat	0dB
1	Hi boost (H.B.)	2.2kHz peak	Hi boost (H.B.)	2.2kHz peak
2	Formant pass (F.P.)	Suppress 1.2kHz to 1.6kHz.	Formant pass (F.P.)	Suppress 1.2kHz to 1.6kHz.
3	Bass boost (B.B.)	200Hz peak	Bass boost (B.B.)	200Hz peak
4	Conventional (T.C.)	Emphasize 600Hz or higher by 3dB.	Conventional (R.C.)	Emphasize 1kHz or lower by 2dB.

4) Speech processor processing

Speech processor processing is carried out to improve the talk power in transmit mode. The band is divided into three parts to perform compression by suppressing the harmonic distortion. A double-precision band-pass filter, which is a IIR filter, is used for input, and a low-pass filter, which is a FIR filter, for output. The IN-BPF HI output level is increased by 3dB to emphasize the high-frequency range.

IN-BPF LOW : 200 or 500~800Hz
IN-BPF MID : 800~1600Hz
IN-BPF HI : 1600~3000Hz
OUT-LPF LOW : 800Hz
OUT-LPF MID : 1600Hz
OUT-LPF HI : 3000Hz

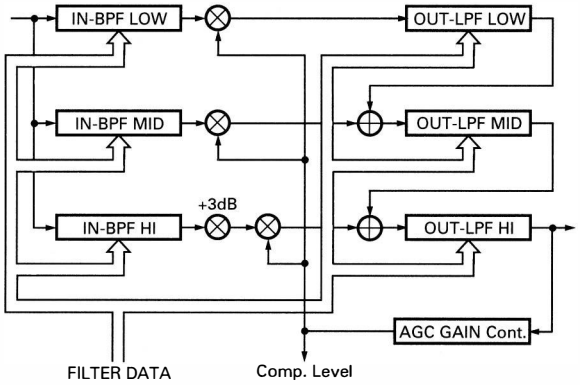

Fig. 24

5) VOX processing

The TS-570D does not have the anti-VOX function because the DSP correlates the receive tone signal and the signal from the microphone and carries out anti-VOX processing automatically. The signal from the microphone is stored in the buffer in the DSP and output with a delay time of 20ms to eliminate the blank time at the beginning.

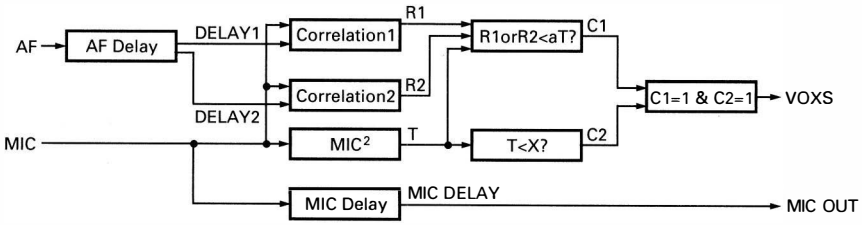

Fig. 25

CIRCUIT DESCRIPTION

6) Microphone amplifier AGC processing

The digital AGC processing is carried out for the signal from the microphone by the DSP. The microphone gain is managed by changing the maximum gain of the AGC. The attack time constant is set to a high value to prevent responding to any noise signals which are input momentarily. The limiter limits the upper limit of the accumulated value in the DSP according to the microphone gain setting.

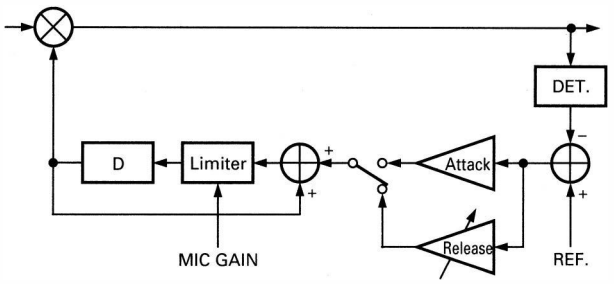

Fig. 26

7) CW tune function

When the conventional models performed CW zero-in, it receives CW receive tone and sidetone and performs tuning by changing the receive frequency manually so that there is no difference in the frequencies of the two tones. The TS-570D is designed to do it automatically. The DSP has an auto notch filter with the CW pitch frequency at the center. The auto notch filter converts the error data for automatic tracking to the beat to DDS frequency data and sends it to the microcomputer. The microcomputer adjusts the receive frequency automatically. The CW zero-in is carried by repeating this process. If the CW signal is weak or if there are several stations in the receive band, they cannot be tuned precisely.

8) CTCSS decode

The TS-570D is the first HF fixed model that has a CTCSS decoder which operates in FM mode. The microcomputer checks CTCSS decode by detecting the subtone in the receive signal using the DSP to turn the audio signal output on and off.

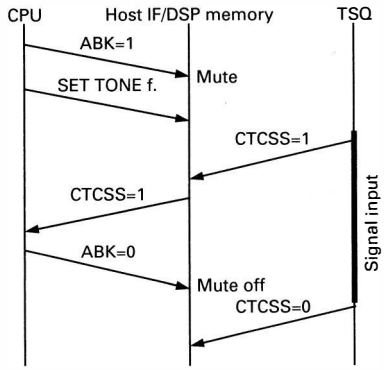

Fig. 27

9) Noise/interference processing

The noise/interference processing, SPAC, line enhancer, and beat cancel functions of the TS-570D are made possible by digital signal processing by the DSP. They are outlined below.

- **SPAC (NR2)**

SPAC stands for Speech Processing System by use of Auto Correlation function. It extracts periodical signals (target receive signals) using a self-correlation function and suppresses noise. SPAC improves the S/N effectively, but may produce noise because signals discontinue when periodical signals are extracted.

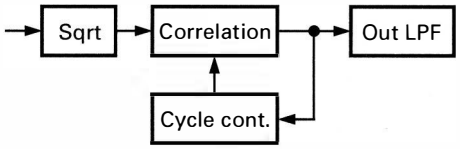

Fig. 28

- **Line enhancer**

The line enhancer emphasizes the periodical signal and suppresses noise using a 64-tap FIR adaptive filter. The convergence speed of the adaptive filter is changed in proportion to the signal strength meter level. If the signal strength meter level is high, the change of the tone is suppressed. The value of the delay adapted according to the mode is changed to achieve the optimum effect for each mode.

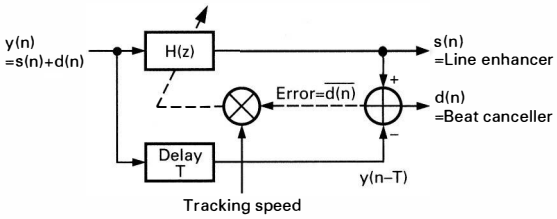

Fig. 29

- **Beat cancel**

The beat canceler suppresses beat interference by adding the periodical signals with reverse phases using the same 64-tap FIR adaptive filter as for the line enhancer. The FIR filter can suppress several beats. The convergence speed of the adaptive filter is set to the optimum value for producing the beat cancel effect. However, an audio signal may be canceled as it is regarded as a periodical signal.

DESCRIPTION OF COMPONENTS

FINAL UNIT (X45-353X-XX) 0-10 : K,M2 2-71 : E,E2,E3

Ref. No.	Parts No.	Use/Function	Operation/Condition/Compatibility
Q1	2SC1971	Pre-drive amplifier	Wide-band amplification of HF band
Q2,3	2SC3133	Drive amplifier	Push-pull wide-band amplification of HF band
Q4,5	2SC2879	Final amplifier	Push-pull wide-band amplification of HF band
Q6	2SC3421(Y)	Final bias supply	Temperature compensation of final
Q7	FMC2	Switching	K1 (AT IN ⟷ THRU) control
Q8	FMC2	Switching	K2 (TX ⟷ RX) control
Q9	FMC2	Switching	K3 (ANT1 ⟷ ANT2) control
Q10	DTC114EK	Switching	On when over voltage
Q11	DTC143TK	Switching	K4 (Power on ⟷ off) control
Q12,13	DTD123EK	Switching	Fan motor control
Q14	2SC2714(Y)	Buffer amplifier	AT control voltage detection signal shaping
Q15	2SC2714(Y)	Buffer amplifier	AT control current detection signal shaping
Q16	DTC114EK	Switching	FEN logic inversion
IC1	TA7805S	Regulator	14S → 5A
IC2	TA7808S	Regulator	14S → 8A
IC3	TA75S393F	Comparator	Voltage/current amplitude comparison
IC4	SN74S74NS	D flip-flop	Voltage/current phase comparison
IC5	M54562P	Driver	LPF relay control
IC6	NJU3714G	Decoder	LPF control signal serial → parallel convert
IC7,8	µPD6345GS	Decoder	AT C control signal serial → parallel convert
IC9	µPD6345GS	Decoder	AT L control signal serial → parallel convert
IC10	TA7810S	Regulator	14S → 10A
D1	MA27T-B	Temperature compensation	Temperature sensing of pre-drive
D2	MA27-B	Temperature compensation	Temperature sensing of drive
D3,4	MA27-B	Temperature compensation	Temperature sensing of final
D5	1SS101	High-frequency rectification	Reflected waveform voltage detection
D6	1SS101	High-frequency rectification	Forward waveform voltage detection
D7	LFB01	Surge absorption	K1
D8	LFB01	Surge absorption	K2
D9	LFB01	Surge absorption	K3
D10,11	DSA301LA	Surge absorption	Lighting surge protection
D12	SG-5L(R)	Protection diode	Reverse connection protection
D13	ERZ-M10DK220	Surge absorption	Power surge protection
D14	02CZ18(X,Y)	Zener diode	Over voltage detection
D15	LFB01	Surge absorption	K4
D16	DAN202K	Switching	PSC and BOVR OR
D17	LFB01	Surge absorption	Fan
D18,20,22	1SS226	Clipper	AT control voltage detection signal shaping
D19,21,23	1SS226	Clipper	AT control current detection signal shaping
D24	1SS101	High-frequency rectification	AT control voltage amplitude signal detection
D25	1SS101	High-frequency rectification	AT control current detection signal detection
D26	DSA301LA	Surge absorption	Lighting surge protection
D101~601	LFB01	Surge absorption	LPF switching relay
D801~823	LFB01	Surge absorption	AT switching relay

CONTROL UNIT (X53-369X-XX) 0-10 : K 0-21 : M2 2-71 : E 2-72 : E2 2-73 : E3

Ref. No.	Parts No.	Use/Function	Operation/Condition/Compatibility
Q1	DTC143EK	Switching	EEPROM write control
Q2	DTC143EK	Switching	Transmission control (KEY line)
Q3,4	DTC114EK	Switching	Multiplexer
Q5	DTA143EK	Switching	Backup judgement

DESCRIPTION OF COMPONENTS

Ref. No.	Parts No.	Use/Function	Operation/Condition/Compatibility
Q6	DTC143EK	Switching	AT-300 control (TT, TS)
Q7	DTA143EK	Switching	AT-300 control (TT, TS)
Q8	DTC143TK	Switching	Backup judgement
Q9	DTC143EK	Switching	AT-300 control (TT, TS)
Q10	DTA143EK	Switching	AT-300 control (TT, TS)
Q11, 12	DTC143EK	Switching	AT mute judgement
IC1	AT24C64N10SI27	EEPROM	Adjustment data saving
IC2	CAT35C102KI	EEPROM	Electronic keyer message memory
IC3	UPD75004GB-746	CPU	Electronic keyer control 4 bit microprocessor
IC4	PST9121NR	Reset	Reset signal generation
IC5	CXD1095Q	Extended I/O	
IC6	M37710EFBJQF*	CPU	16 bit main microprocessor
IC7,8	TC4052BF	Multiplexer	Analog signal input
IC9	NJM78L05UA	AVR	14S → 5V
IC10	NJM78L06UA	AVR	14V → 6V
IC11	NJM78L08UA	AVR	14S → 8V
IC501	NJM2100M	Amplifier	Microphone amplifier
IC502	BU4066BCFV	Analog switch	Input changeover
IC503	NJM2100M	Buffer amplifier	CODEC input
IC504	AK4506-VS	A/D, D/A	CODEC
IC505	NJM2100M	LPF/Buffer amplifier	CODEC output
IC506	NJM2100M	Bias/Buffer amplifier	CODEC output
IC507	ADSP2181KS-115	DSP IC	
IC508	TC74HC4040AF	Clock divider	
IC511	TC7S04F	Inverter	Clock inversion
IC512	27C01012DJPHB	EPROM	DSP program saving
IC513	NJM78L05UA	AVR	14S → 5V
D1	1SS355	Protection diode	SS line
D2	1SS355	Protection diode	DOT line
D3	1SS355	Protection diode	DASH line
D4	1SS355	Protection diode	KEY line
D5	DAN202U	Switching (Reverse current prevention)	Lithium battery or DC 13.8V
D6	1SS355	Reverse current prevention	BKC line
D7	1SS355	Reverse current prevention	5C line
D8	02CZ8.2(Y)	Voltage detection	Backup detection
D9	02CZ8.2(Y)	Voltage detection	AF mute detection
D10	DAN202U	Switching (Reverse current prevention)	Power switch off or DC down

TX-RX UNIT (X57-500X-XX) : TX-RX 0-10 : K,M2 2-71 : E,E2,E3

Ref. No.	Parts No.	Use/Function	Operation/Condition/Compatibility
Q1	DTA124EK	Switching	ATT changeover
Q2	2SD1757K(S)	Muting	On when TX, Off when RX
Q3	2SB1188(Q,R)	Switching	On when RX, Off when TX
Q4	DTC143TK	Switching	On when RX, Off when TX
Q5~8	2SK520(K44)	RX 1st mixer	RF : 30kHz~30MHz, IF : 73.05MHz, LO1 : 73.08~103.05MHz
Q9	RU201	Buffer amplifier	NB
Q10,13	2SK520(K43)	RX 2nd mixer	IF1 : 73.05MHz, IF2 : 8.83MHz, LO2 : 64.22MHz
Q11	3SK131(M)	RX IF amplifier	IF2 : 8.83MHz
Q12	3SK131(M)	RX IF amplifier	IF1 : 73.05MHz
Q14	2SC2412K(S)	IF amplifier	IF2 : 8.83MHz
Q15	2SC2412K(S)	Switching	RF blanking
Q16	2SC3357	Amplifier	LO1

DESCRIPTION OF COMPONENTS

Ref. No.	Parts No.	Use/Function	Operation/Condition/Compatibility
Q17,18	2SK520(K44)	RF amplifier	Pre-amplifier (f < 21.5MHz)
Q20	DTA124EK	Switching	On when pre-amplifier off
Q21	2SC2412K(S)	Waveform shaping	ALC keying
Q22	2SC2412K(S)	Buffer amplifier	Data output (ACC2 terminal)
Q24	FMC2	Switching	CKY control
Q25	3SK131(M)	RF amplifier	Pre-amplifier (f ≥ 21.5MHz)
Q26	DTA143EK	Switching	On when pre-amplifier on (f ≥ 21.5MHz)
Q27,30	3SK131(M)	TX 1st mixer	IF1 : 73.05MHz, IF2 : 8.83MHz, LO2 : 64.22MHz
Q28,31	3SK184(R)	TX 2nd mixer	RF : 30kHz~30MHz, IF : 73.05MHz, LO1 : 73.08~103.05MHz
Q29	3SK131(M)	TX if amplifier	IF2 : 8.83MHz
Q35	2SC2954	Drive amplifier	
Q36	2SC2412K(S)	Buffer amplifier	Balanced modulator input
Q37	DTC114EK	Switching	On when FM mode
Q38	2SC2412K(S)	Amplifier	Balanced modulator output
Q39	2SA1037K(R)	Switching	DC/DC converter
Q40,41	2SC2412K(S)	Switching	DC/DC converter
Q42	2SB1188(Q,R)	Switching	External control relay (On when TX)
Q49	2SD1624(S)	Power supply	Ripple filter
Q50	DTC114EK	Switching	Squelch control (ACC2 terminal)
Q51	DTC143TK	Switching	External control relay
Q52	DTC124EK	Switching	RX IF gain changeover (On when gain down)
Q57	DTC114EK	Switching	CAR muting (On when RX)
Q59	FMA5	Switching	On when SSB, FM, CW mode
Q61	FMA5	Switching	On when AM mode and power break
Q64	2SC2412K(S)	Muting	AF mute
Q65	DTC114EK	Muting	Modulation line mute
Q66	DTC114EK	Switching	On when except TX FM mode
Q67	DTC114EK	Switching	Forward waveform voltage time constant changeover
Q68	2SB1188(Q,R)	Switching	TXB
Q69	2SB1188(Q,R)	Switching	RXB
Q70	DTC114EK	Switching	Reflected waveform voltage time constant changeover
Q71	DTC143EK	Switching	On when TX
Q72	FMG3A	Switching	On when RX
Q73	DTA143EK	Switching	On when pre-amplifier on (f < 21.5MHz)
Q75	DTC114EK	Switching	RF blanking
Q76	DTC114EK	Switching	On when pre-amplifier off
Q77	DTC114EK	Switching	ATT changeover
Q78	DTC114EK	Switching	External control relay (On when TX)
Q79	DTC114EK	Switching	ALC time constant changeover (On when AM mode)
Q80	DTC124EK	Switching	AGC on/off (On when FM mode and TX)
Q81	DTC114EK	Switching	TX gain changeover
IC1	NJM2904M	DC amplifier	S-meter (Except FM mode)
IC2	μPC1037GR	Balanced modulator	SSB, AM modulation
IC3	BU2090FS	Extended I/O	Serial/parallel conversion (BPF changeover)
IC4	BU4066BCFV	Analog switch	AGC time constant and S-meter output changeover
IC5	NJM2902M	DC amplifier	TX gain, ALC meter and voltage, CAR balance
IC6	M62363FP	DAC	
IC7	KCD10	HIC	FM frequency conversion, detection, S-meter output
IC8	LA4446	AF amplifier	
IC9	BU4066BCFV	Analog switch	Detection output changeover
IC11	TC9174F	Extended I/O	Serial/parallel conversion
IC12	BU4066BCFV	Analog switch	Modulation input changeover
IC13	NJM2904M	DC amplifier	Forward and reflected waveform voltage
IC14	NJU3718G	Extended I/O	Serial/parallel conversion

DESCRIPTION OF COMPONENTS

Ref. No.	Parts No.	Use/Function	Operation/Condition/Compatibility
IC15	KCD11	HIC	SSB, CW, AM detection, s-meter output
IC16	KCC11	HIC	ALC, final protection
IC17	TC7S08F	Buffer amplifier	
D1	LFB01	Relay surge absorption	ATT relay
D2,5	RLS245	Lighting surge absorption	
D3,4	V08(G)	Lighting surge absorption	
D6	RN731H	Switching	On when RX, Off when TX
D7	RN731H	Switching	On when RX (From 1.705MHz)
D8	RN731H	Switching	LPF switching (On when f ≤ 1.705MHz)
D9	LFB01	Switching	LPF switching (On when f ≤ 1.705MHz)
D10	RN731H	Switching	BPF switching (On when 1.705MHz < f ≤ 2.5MHz)
D11	LFB01	Switching	BPF switching (On when 1.705MHz < f ≤ 2.5MHz)
D12	RN731H	Switching	BPF switching (On when 2.5MHz ≤ f < 4.1MHz)
D13	LFB01	Switching	BPF switching (On when 2.5MHz ≤ f < 4.1MHz)
D14	RN731H	Switching	BPF switching (On when 4.1MHz ≤ f < 6.9MHz)
D15	LFB01	Switching	BPF switching (On when 4.1MHz ≤ f < 6.9MHz)
D16	RN731H	Switching	BPF switching (On when 6.9MHz ≤ f < 7.5MHz)
D17	LFB01	Switching	BPF switching (On when 6.9MHz ≤ f < 7.5MHz)
D18	RN731H	Switching	BPF switching (On when 7.5MHz ≤ f < 10.5MHz)
D19	LFB01	Switching	BPF switching (On when 7.5MHz ≤ f < 10.5MHz)
D20	RN731H	Switching	BPF switching (On when 10.5MHz ≤ f < 13.9MHz)
D21	LFB01	Switching	BPF switching (On when 10.5MHz ≤ f < 13.9MHz)
D22	RN731H	Switching	BPF switching (ON when 13.9MHz ≤ f < 14.5MHz)
D23	LFB01	Switching	BPF switching (On when 13.9MHz ≤ f < 14.5MHz)
D24	RN731H	Switching	BPF switching (On when 14.5MHz ≤ f < 21.5MHz)
D25	LFB01	Switching	BPF switching (On when 14.5MHz ≤ f < 21.5MHz)
D26	RN731H	Switching	BPF switching (On when 21.5MHz ≤ f < 30.0MHz)
D27	LFB01	Switching	BPF switching (On when 21.5MHz ≤ f < 30.0MHz)
D30	LFB01	Switching	On when pre-amplifier off
D31	MA110	Switching	AGC time constant
D32	LFB01	Switching	On when pre-amplifier off
D33	DAP236K	Switching	8.83MHz filter
D34	1SS312	Switching	8.83MHz filter TX/RX changeover
D35~37	DAP236K	Switching	8.83MHz filter
D38	LFB01	Switching	8.83MHz filter TX/RX changeover (On when RX)
D39	LFB01	Switching	8.83MHz filter TX/RX changeover (On when TX)
D40	DAP236K	Switching	8.83MHz filter
D41	1SS312	Switching	LO2
D42	DAP236K	Switching	8.83MHz filter
D43	RN731H	Switching	On when pre-amplifier on (f < 21.5MHz)
D44	1SS312	Switching	LO1
D45	LFB01	Switching	On when pre-amplifier on (f < 21.5MHz)
D46,47	DAP236K	Switching	8.83MHz filter
D48~50	MA110	Reverse current prevention	
D51	LFB01	Switching	On when pre-amplifier on (f ≥ 21.5MHz)
D52	RN731H	Switching	On when pre-amplifier on (f ≥ 21.5MHz)
D53,54	DAP236K	Switching	8.83MHz filter
D55	LFB01	Switching	On when TX
D56	RN739D	RF ATT	TX gain control
D57	B30-2001-05	LED	Voltage stability
D58	MA110	Voltage shift	
D61	LFB01	Switching	On when TX
D62	RB751H	Reverse current prevention	
D63	1SS226	Rectification	DC/DC convertor

DESCRIPTION OF COMPONENTS

Ref. No.	Parts No.	Use/Function	Operation/Condition/Compatibility
D64	02CZ6.2(Y)	Zener diode	Voltage stabilization
D68	LFB01	Relay surge absorption	External control relay
D69,71	RB751H	Reverse current prevention	
D73	02CZ3.3(Y)	Zener diode	Voltage stabilization
D74	02CZ4.7(Y)	Zener diode	Voltage stabilization
D75	MA110	Reverse current prevention	
D76	1SS226	Clipper	On when FM large input
D77	02CZ6.2(Y)	Zener diode	Voltage stabilization
D82	LFB01	Switching	CAR TX/RX changeover (On when TX)
D85	MA110	Reverse current prevention	
D89~92	MA110	Reverse current prevention	
D95	MA110	Reverse current prevention	
D96	02CZ5.1(Y)	Zener diode	Voltage stabilization
D97	DAP236K	Switching	8.83MHz filter
D98	DAN202K	Switching	ON when FM mode and TX
D99,100	02CZ24(Y)	Zener diode	Surge absorption of power supply line
D101,102	MA110	Reverse current prevention	
D103,104	LFB01	Surge absorption	

TX-RX UNIT (X57-500X-XX) : PLL 0-10 : K,M2 2-71 : E,E2,E3

Ref. No.	Parts No.	Use/Function	Operation/Condition/Compatibility
Q500	2SC2714(Y)	X'tal OSC	20MHz
Q501~503	2SC2714(Y)	Buffer amplifier	20MHz
Q504	2SC2412K(S)	amplifier	20MHz
Q505	2SC3722K(R)	Active LPF	Comparison 20kHz (FM 5kHz)
Q506,507	2SC3722K(R)	Active filter	
Q508	DTC143TK	Switching	FM modulation input on/off
Q509	2SK1875(V)	VCO	LO2
Q510	2SC2714(Y)	Buffer amplifier	64.22MHz
Q511	2SC2714(Y)	Amplifier	64.22MHz
Q512	2SC2412K(S)	Buffer amplifier	Chopper output (10MHz)
Q513	2SC2712(GR)	Buffer amplifier	D/A buffer
Q514	2SC2412K(S)	Buffer amplifier	
Q515	2SC2412K(S)	Amplifier	CAR
Q516	2SC2412K(S)	Buffer amplifier	CAR
Q517	2SC2412K(S)	Buffer amplifier	Chopper output (5MHz)
Q518	2SC2712(GR)	Buffer amplifier	D/A buffer
Q519	2SC2412K(S)	Buffer amplifier	Mixer input buffer (5.54~6.09MHz)
Q520	2SC2412K(S)	Buffer amplifier	20MHz
Q521	2SC2714(Y)	Tripled circuit	20MHz x 3 = 60MHz
Q522	2SC2714(Y)	Amplifier	PLL IC input (7.5~47.5MHz)
Q523	2SC2412K(S)	Buffer amplifier	PLL IC input (7.5~47.5MHz)
Q524	2SC3722K(R)	Active LPF	Comparison 500kHz
Q525,526	2SC3722K(R)	Active LPF	
Q527	DTC114EK	Switching	VCO A changeover
Q528	2SK1875(V)	VCO A	73.08~84.04MHz
Q529	DTC114EK	Switching	VCO B changeover
Q530	2SK1875(V)	VCO B 84.04~97.04MHz	
Q531	DTC114EK	Switching	VCO C changeover
Q532	2SK1875(V)	VCO C	97.04~103.05MHz
Q533	2SC2714(Y)	Buffer amplifier	Mixer input buffer (73.08~103.05MHz)
Q534	2SC2714(Y)	Amplifier	LO1 output (73.08~103.05MHz)

DESCRIPTION OF COMPONENTS

Ref. No.	Parts No.	Use/Function	Operation/Condition/Compatibility
Q535	2SC2714(Y)	Buffer amplifier	LO1 output (73.08~103.05MHz)
Q543	2SC2714(Y)	Switching	VCO A BPF band changeover
Q544	2SC2412K(R)	Ripple filter	8V
Q545	2SC2714(Y)	Buffer amplifier	Mixer input buffer (65.54~66.04MHz)
Q546	2SC2714(Y)	Amplifier	LO2 output
Q800	2SC2714(Y)	Amplifier	NB
Q801	DTC114EK	Switching	NB on/off
Q802	2SC2714(Y)	Amplifier	NB
Q803	2SC2412K(S)	Amplifier	AGC, NB
Q804	2SC2714(Y)	Amplifier	NB
Q805	2SC2412K(S)	Switching	NB
Q806	2SC2714(Y)	Buffer amplifier	NB
Q807	DTA114EK	Switching	NB
IC500	MB86001PF	PLL	2~5 : Division ratio setting input 6 : 64.22MHz input, 9 : Lock voltage output 11 : Unlock output ("L" : Unlock), 15 : 20MHz input
IC501	F71022	DDS	CAR
IC502	F71022	DDS	LO1 (540~1040kHz)
IC503	UPC1037GR	Mixer	10.0 − 1.17 = 8.83MHz
IC504	UPC1037GR	Mixer	540~1040kHz → 5.54~6.04MHz
IC505	UPC1686G	Mixer	5.54~6.04MHz → 65.54~66.04MHz
IC506	SN76514N	Mixer	73.05~103.05MHz + 65.54~66.04MHz = 7.5~47.5MHz
IC507	MB86001PF	PLL	2~5 : Division ratio setting input 6 : 7.5~47.5MHz input 8,9 : Lock voltage output 11 : Unlock output ("L" : Unlock) 15 : 20MHz input
IC508	BU4S66	Inverter	
IC510	TC7S08F	Buffer amplifier	
IC511	NJM78L08UA	AVR	14S → 8V (LO1)
IC900	ADM232LAR	Level shift	RS-232 level shift
D500	1SV269	Vari-cap diode	LO2, VCO
D501	1SV269	Vari-cap diode	LO1, VCO A
D502	RLS135	Switching	LO1, VCO A output
D503	1SV269	Vari-cap diode	LO1, VCO B
D504	RLS135	Switching	LO1, VCO B output
D505	1SV269	Vari-cap diode	LO1, VCO C
D506	RLS135	Switching	LO1, VCO C output
D507	DAP202K	Reverse current prevention	Unlock signal detection
D508,509	MA110	Reverse current prevention	
D800	MA716	RF switch	Noise detection

SEMICONDUCTOR DATA

Extended I/O : CXD1095Q (Control Unit IC5)

■ Terminal connection diagram

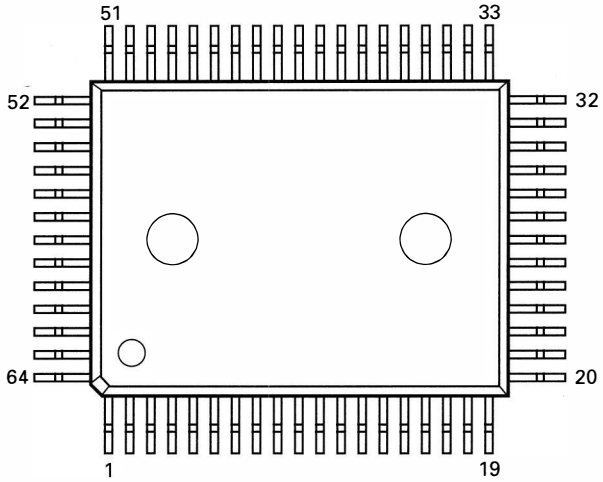

■ Terminal function

Pin	Name	Port	I/O	Details
1,2	NC			
3	M0	PB1	O	Microphone input switching "H" : Normal microphone input, "L" : Others
4	M1	PB2	O	Microphone input switching "H" : Packet input, "L" : Others
5	M2	PB3	O	Microphone input switching "H" : DRU-3A input, "L" : Others
6	DREN	PB4	O	Enable "H" : DRU-3A serial parallel register through, "L" : DRU-3A serial/parallel register latch
7	VEN1	PB5	O	Enable "L" : TX-RX unit DAC register through, "H" : TX-RX unit DAC register latch
8	REN1	PB6	O	Enable "H" : TX-RX unit serial/parallel register through, "L" : TX-RX unit serial/parallel register latch
9	REN2	PB7	O	Enable "L" : TX-RX unit serial/parallel register through, "H" : TX-RX unit serial/parallel register latch
10		Vss		GND
11	TYPE8	PC0	I	Destination "L" : 50W, "H" : 100W
12	TYPE9	PC1	I	Destination "L" : Not general cover in TX, "H" : General cover in TX
13	50WSW	PC2	I	Setting check "L" : Without restriction, "H" : Restriction on 50W
14~17	K3~K0	PC3~PC6	I	Key matrix
18	ULK	PC7	I	State check "L" : PLL unlock, "H" : Others, normal
19	NC			
20	PEN1	PD0	O	Enable "H" : PLL1 register through, "L" : PLL1 register latch
21	PEN2	PD1	O	Enable "H" : PLL2 register through, "L" : PLL2 register latch
22	DEN1	PD2	O	Enable "H" : DDS1 register through, "L" : DDS1 register latch
23	DEN2	PD3	O	Enable "H" : DDS2 register through, "L" : DDS2 register latch
24	BLANK	PD4	O	LCD driver control "H" : Display goes off
25		Vss		GND
26		Vdd		5V
27	LEN1	PD5	O	Enable "H" : LCD1 driver register through, "L" : LCD1 driver register latch
28	LEN2	PD6	O	Enable "H" : LCD2 driver register through, "L" : LCD2 driver register latch
29	LEN3	PD7	O	Enable "H" : LCD3 driver register through, "L" : LCD3 driver register latch
30~32	IAD0~IAD2	D0~D2	I/O	Pseudo bus
33,34	NC			
35~39	IAD3~IAD7	D3~D7	I/O	Pseudo bus
40		CLR	I	
41		ODEN	I	
42		Vss		GND
43		WR	I	
44		RD	I	

SEMICONDUCTOR DATA

Pin	Name	Port	I/O	Details
45		CS	I	
46~48	IAD8~IAD10	A0~A2	I/O	Pseudo bus
49	TTO	PE0	O	External AT control "H" : AT through request, "L" : Others
50	TSO	PE1	O	External AT control "H" : AT tuning request, "L" : Others
51	NC			
52	TSI	PE2	I	External AT control "H" : AT through end, "L" : Others
53	TTI	PE3	I	External AT control "H" : AT tuning end, "L" : Others
54~56	TYPE0~TYPE2	PA0~PA2	I	Destination Unit destination setting
57		Vss		GND
58		Vdd		5V
59,60	TYPE3,TYPE4	PA3,PA4	I	Destination Unit destination setting
61	TYPE5	PA5	I	Destination Unit destination setting (Reserve)
62	TYPE6	PA6	I	Destination "L" : 50MHz band installed, "H" : 50MHz band not installed
63	TYPE7	PA7	I	Destination Unit destination setting (Reserve)
64	FEN	PB0	O	Enable "H" : FFA unit serial/parallel register through, "L" : FFA unit serial/parallel register latch

Decoder : NJU3714G (Final Unit IC6)

■ Terminal connection diagram

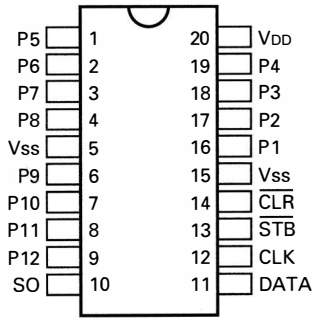

■ Block diagram

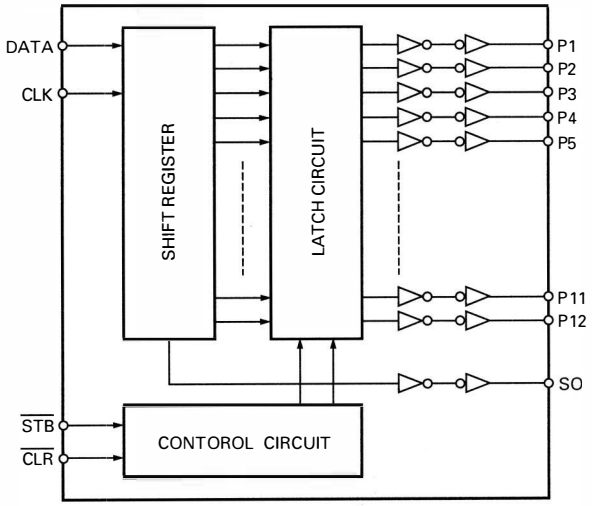

Clock Divider : TC74HC4040AF (Control Unit IC508)

■ Terminal connection diagram

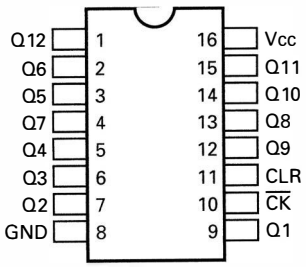

SEMICONDUCTOR DATA

CPU : M37710EFBJQF＊ (Control Unit IC6)

■ Terminal connection diagram

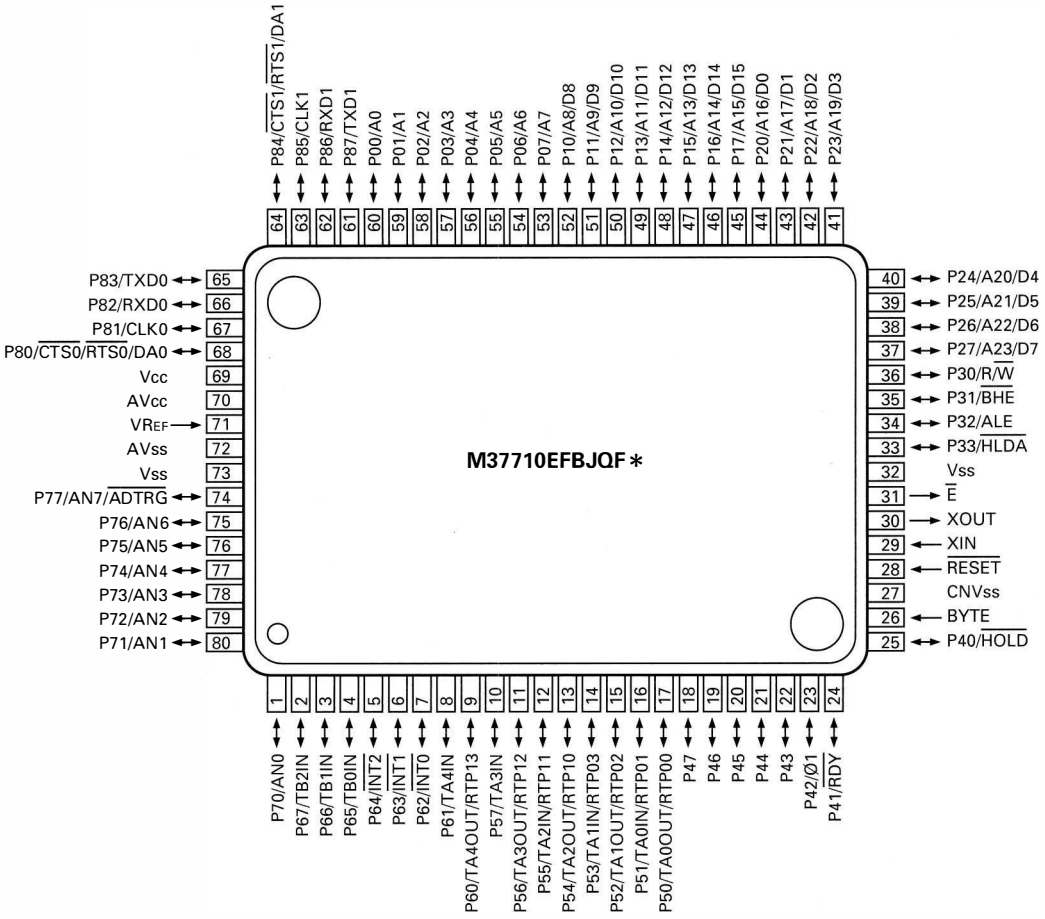

■ Terminal function

Pin	Name	Port	I/O	Details	
1	AN0	AN0	I	A/D	Analog input switched by ADC1 and ADC2, IC7 x data input.
2	RENB	TB2in	I	Encoder	Edge interrupt, Rotation direction check
3	RENA	TB1in	I	Encoder	Edge interrupt, Rotation direction check
4	CENA	TB0in	I	Encoder	Edge interrupt
5	PSW	INT2	I	Interrupt	"H" : Power switch interrupt, "L" : Normal
6	BOVR	INT1	I	Interrupt	"L" : Overvoltage interrupt, "L→H" : Power restore interrupt, "H" : Normal
7	BKC	INT0	I	Interrupt	"L" : Voltage drop interrupt, "L→H" : Power restore interrupt, "H" : Normal
8	MENB	TA4in	I	Encoder	Main encoder input Two-phase pulse signal processing
9	MENA	TA4out	I	Encoder	Main encoder input Two-phase pulse signal processing
10	CENB	P57	I	Encoder	Click encoder input Rotation direction check
11	PCK	P56	O	Clock	PLL/DDS serial clock
12	PDA	P55	O	Data	PLL/DDS serial data
13	CLOCK	P54	(I/)O	Clock	Common serial clock "L" : VS-3 is installed, "H" : Not installed
14	DATA	P53	O	Data	Common serial data
15	SPD	TA1out	O	Electric key control	PWM with 1/10 the frequency of WPM
16	VCS	P51	O	Chip select	"L" : VS-3 is selected, "L→H" : Voice synthesis start, "H" : Others, normal
17	BEEP	TA4out	O	Beep control	"H" : Beep output, "L" : Others, normal
18	CKY	P47	O	Transmitter circuit control	"H" : Transmission output, "L" : Others
19	ABK	P46	O	Receiver circuit control	"H" : DSP AF mute, "L" : Others
20	TXC	P45	O	Transmitter circuit control	"H" : In transmission mode, "L" : Others

SEMICONDUCTOR DATA

Pin	Name	Port	I/O	Details	
21	RXK	P44	O	Receiver circuit control	"H" : DSP signal mute, "L" : Others
22	NAR	P43	I	State check	"H" : VS-3 serial latch idle, "L" : Others
23	SCL	P42	O	Clock	EEPROM serial clock
24	SDA	P41	I/O	Data	EEPROM serial data
25	EOM	P40	I	State check	"H" : DRU-3A message playback end, "L" : Others
26		BYTE	I	Bus width switching input	
27		CNVss	I	CNVss	
28		RESET	I	Reset input	
29		Xin	I	Clock input	
30		Xout	O	Clock output	
31		E	O	Enable output	
32		Vss		Power input	
33	SCK	P33	O	Clock	Electric key microcomputer serial data clock
34	PKS	P32	I	Transmission request	"L" : Packet transmission request, "H" : Normal
35	KYS	P31	I	Installation check	"H" : Paddle/electric key installed, "L" : Others
36	DSPEN	P30	O	Bus control	"L" (H→L) : Data processing request, "H" : Others, normal
37	RESET	P27	O	Reset	"L" : DSP, Electric key, Expansion I/O, VS-3 reset, "H" : Others, normal
38	IACK	P26	O	Bus control	"L" : Address latch, "H" : Address through
39	IAL	P25	I	Bus control	"H" : DSP chip select can be changed, "L" : DSP chip select cannot be changed
40	PSC	P24	O	Power control	"H" : Power ON, "HiZ" : Power OFF
41	IOCS	P23	O	Chip select	"L" : Expansion I/O is selected, "H" : Expansion I/O is not selected
42	IS	P22	O	Chip select	"L" : DSP is selected, "H" : DSP is not selected
43	IWR	P21	O	Bus control	"L" : Data writing, "H" : When data is not written
44	IRD	P20	O	Bus control	"L" : Data reading, "H" : When data is not read
45~49	IAD15~IAD11	P17~P13	I/O	Pseudo bus	Address/data multiplex when the DSP is accessed, Not used during expansion I/O access (The previous state is maintained)
50~52	IAD10~IAD8	P12~P10	I/O	Pseudo bus	Address/data multiplex when the DSP is accessed, Address bus during expansion I/O access
53~60	IAD7~IAD0	P07~P00	I/O	Pseudo bus	Address/data multiplex when the DSP is accessed, Data bus during expansion I/O access
61	KEY	P87	I	Transmission request	"L" : Transmission request from the keyer, "H" : Normal
62	MEA	P86	I	Electric key control	"H" : Electric keyer microcomputer message playback, "L" : Others, normal
63	BSY	P85	I	Electric key control	"H" : Electric keyer microcomputer data cannot be set, "L" : Others, normal
64	SS	P84	I	Transmission request	"L" : Transmission request by the microphone PTT, "H" : Normal
65	TXD	TXDO	O	UART data	
66	RXD	RXDO	I	UART data	
67	RTS	P81	O	UART control	
68	CTS	CTSO	I	UART control	
69		Vcc		Power input	
70		AVcc		Analog power input	
71		Vref		Reference voltage input	
72		AVss		Analog power input	
73		Vss		Power input	
74	AMD	P77	I	AT control check	Amplitude difference check, "L" : Request to reduce capacity, "H" : Request to increase capacity
75	PHD	P76	I	AT control check	Phase difference check, "L" : Request to reduce capacity, "H" : Request to increase capacity
76,77	ADC2,ADC1	P75,P74	O	Signal switching	Multiplexer switching
78	AN3	AN3	I	A/D	Analog input switched by ADC1 and ADC2, IC8 y data input
79	AN2	AN2	I	A/D	Analog input switched by ADC1 and ADC2, IC8 x data input
80	AN1	AN1	I	A/D	Analog input switched by ADC1 and ADC2, IC7 y data input

SEMICONDUCTOR DATA

A/D, D/A Converter : AK4506-VS (Control Unit IC504)

■ Terminal connection diagram

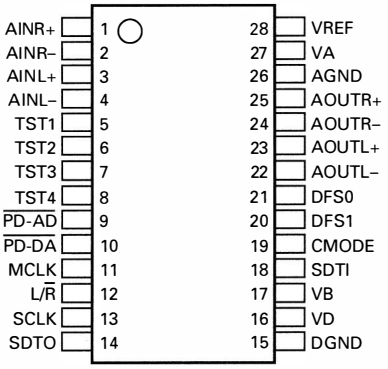

■ Block diagram

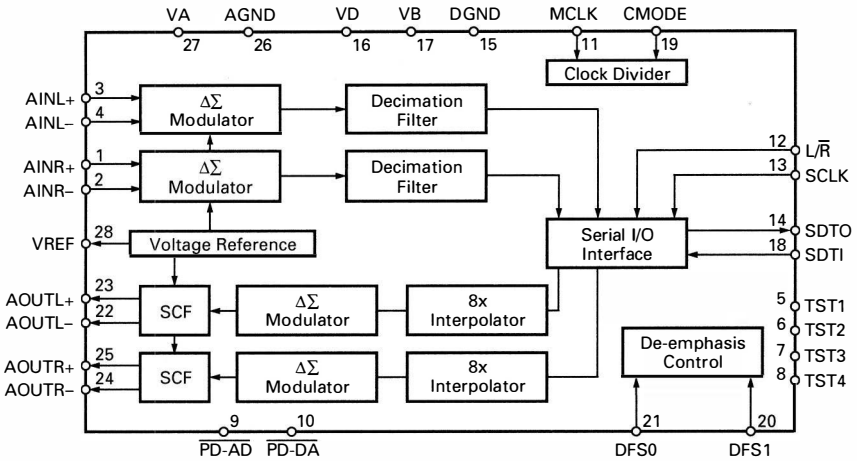

■ Terminal function

Pin No.	Name	I/O	Function
1	AINR+	I	Right-channel analog positive input pin
2	AINR–	I	Right-channel analog negative input pin
3	AINL+	I	Left-channel analog positive input pin
4	AINL–	I	Left-channel analog negative input pin
5	TST1	I	Test pin (Pulldown pin)
6	TST2	I	Open or connect to AGND.
7	TST3	O	Test pin
8	TST4	O	Open
9	$\overline{\text{PD AD}}$	I	Power down pin. $\overline{\text{PD AD}}$: ADC power down pin, $\overline{\text{PD DA}}$: DAC power down pin
10	$\overline{\text{PD DA}}$	I	When each pin is low, the corresponding part enters the power down mode. When the power turns on, resetting and calibration must be carried out. Resetting is performed by making both $\overline{\text{PD AD}}$ and $\overline{\text{PD DA}}$ low.
11	MCLK	I	Master clock input pin.
12	L/$\overline{\text{R}}$	I	Input/output channel select pin. The fs clock is input. High: Left channel; Low: Right channel
13	SCLK	I	Serial data clock pin. One bit of data is output at a falling edge of the signal at this pin.
14	SDTO	O	Serial data output pin. Data is two's complement. The MSB is output first, and 16 bits are output by left justification. Goes low after 16 bits are output. Low when the power is down ($\overline{\text{PD AD}}$: Low).
15	DGND	–	Digital unit ground pin
16	VD	–	Digital unit power supply pin (+5V)
17	VB	–	Silicon PCB power supply pin (+5V)
18	SDTI	I	Serial data input pin. Data is two's complement. The MSB is output first, and 16 bits are output by right justification.
19	CMODE	I	Master clock select pin (Pulldown pin) Low : MCLK=256fs, High : MCLK=384fs
20	DFS1	I	Deemphasis frequency select pin
21	DFS0	I	Supports three frequencies.
22	AOUTL–	O	Left-channel analog negative output pin
23	AOUTL+	O	Left-channel analog positive output pin
24	AOUTR–	O	Right-channel analog negative output pin
25	AOUTR+	O	Right-channel analog positive output pin
26	AGND	–	Analog ground pin
27	VA	–	Analog power supply pin (+5V)
28	VREF	O	Reference voltage output pin VA–3.0V Output according to the VA reference. The 10μF electrolytic capacitor and 0.1μF ceramic capacitor are connected between VREF and VA.

SEMICONDUCTOR DATA

DSP : ADSP2181KS-115 (Control Unit IC507)

■ Terminal connection diagram

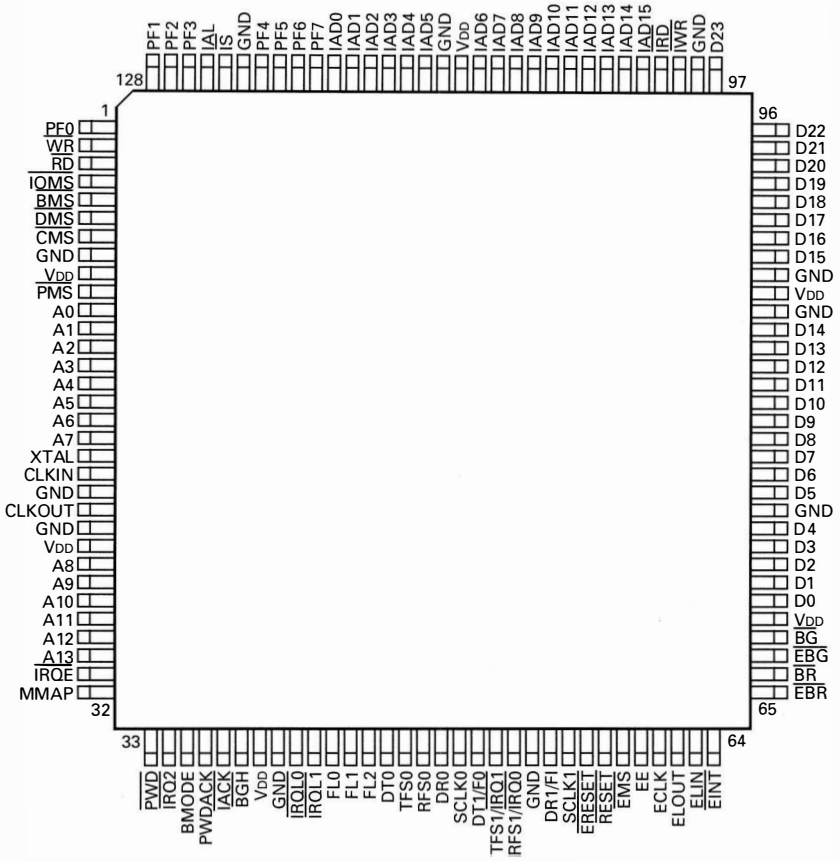

■ Block diagram

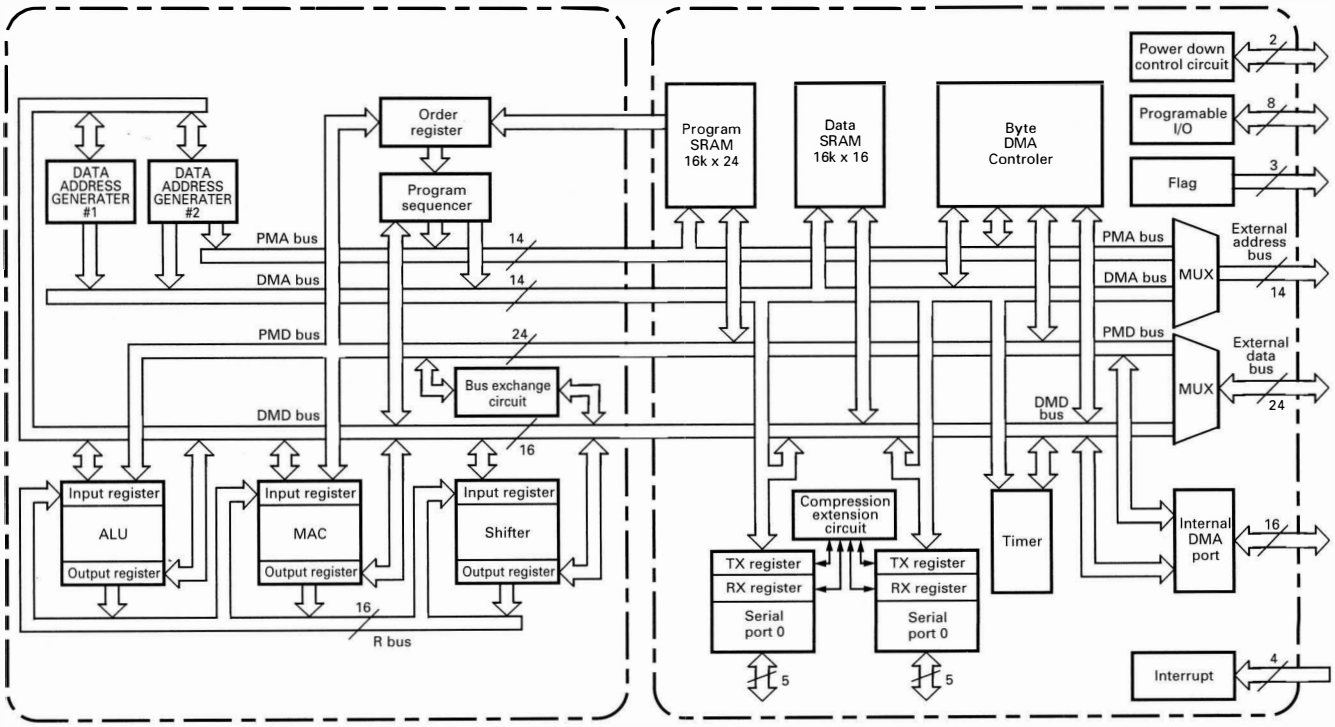

SEMICONDUCTOR DATA

HIC : KCD10 (TX-RX Unit IC7)

■ Terminal connection diagram

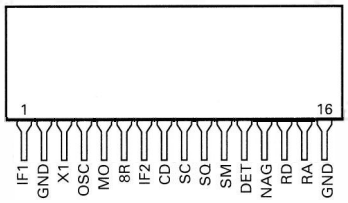

■ Circuit diagram

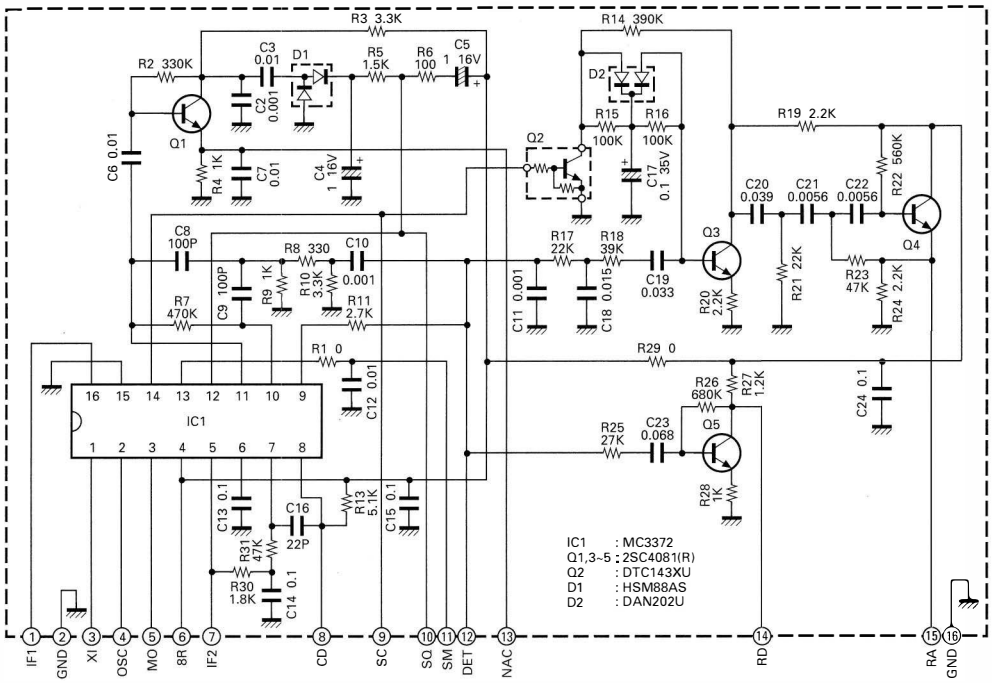

HIC : KCD11 (TX-RX Unit IC15)

■ Circuit diagram

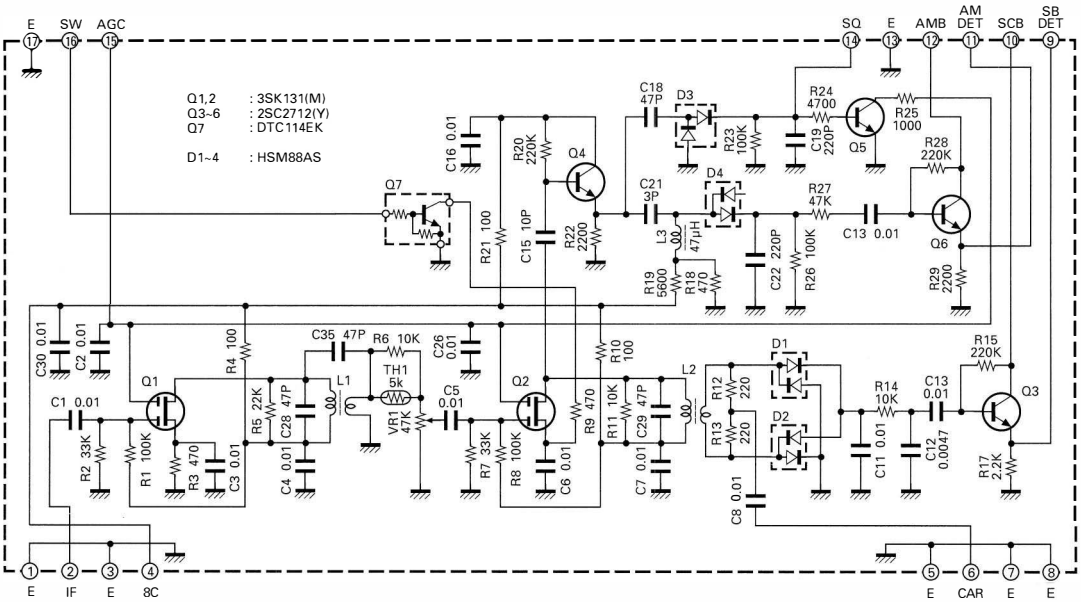

■ Terminal connection diagram

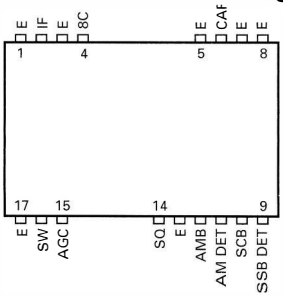

SEMICONDUCTOR DATA

HIC : KCC11 (TX-RX Unit IC16)

■ Terminal connection diagram

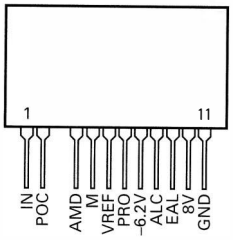

■ Circuit diagram

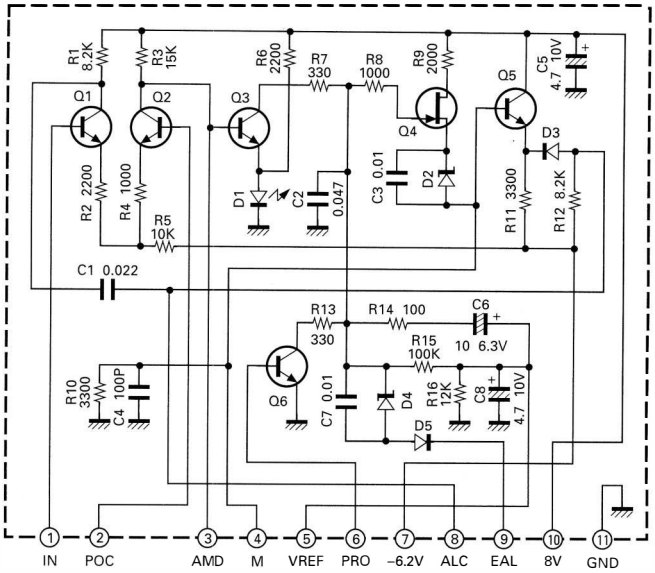

Q1~3,5,6 : 2SC2712(Y)
Q4 : 2SK208(Y) or (GR)
D1 : B30-2001-05
D2 : RD3.0M(B2)
D3,5 : RLS73
D4 : RD12M(B2)

Extended I/O : NJU3718G (TX-RX Unit IC14)

■ Terminal connection diagram

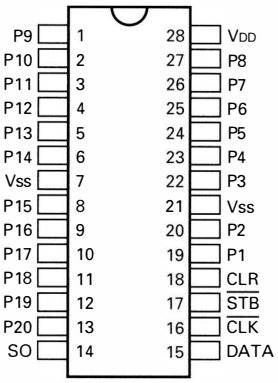

■ Block diagram

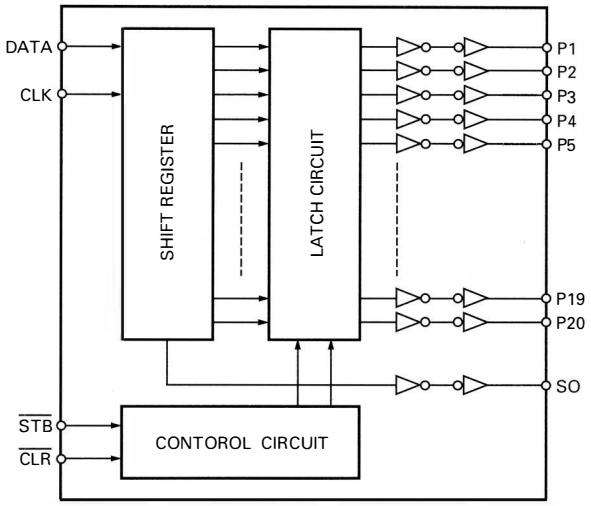

■ Terminal function

Pin No.	Symbol	Function
1~6	P9~P14	Parallel convert data output
7	Vss	GND
8~13	P15~P20	Parallel convert data output
14	SO	Serial data output
15	DATA	Serial data input
16	CLK	Clock signal input
17	$\overline{STB}$	Strobe signal input
18	$\overline{CLR}$	Clear signal input
19,20	P1,P2	Parallel convert data output
21	Vss	GND
22~27	P3~P8	Parallel convert data output
28	VDD	Power supply (4.5~5.5V)

TS-570D

PARTS LSIT

∗New Parts. ⚠ indicates safety critical components.
Parts without **Parts No.** are not supplied.
Les articles non mentionnes dans le **Parts No.** ne sont pas fournis.
Teile ohne **Parts No.** werden nicht geliefert.

L : Scandinavia **K**: USA **P** : Canada
Y: PX (Far East, Hawaii) **T**: England **E** : Europe
Y: AAFES (Europe) **X**: Australia **M**: Other Areas

TS-570D
FINAL UNIT (X45-353X-XX)

Ref. No.	Address	New parts	Parts No.	Description	Destination
TS-570D					
1	2A	∗	A01-2117-02	METALLIC CABINET (UPPER)	
2	2D	∗	A01-2118-02	METALLIC CABINET (LOWER)	
3	3A	∗	A62-0459-03	PANEL ASSY	
4	2D		B09-0355-05	CAP (COM)	E,E2,E3
5	2B	∗	B38-0765-05	LCD ASSY	
6	2C		B42-3343-04	S/NO LABEL	
7	2C		B42-3395-04	LABEL (FCC)	K
8	3E		B44-2163-04	UPC CODE LABEL	
9	1F		B46-0310-03	WARRANTY CARD ACSY	E,E2,E3
9	1F		B46-0410-40	WARRANTY CARD ACSY	K
10	1F	∗	B52-0608-00	SCHEMATIC DIAGRAM ACSY	K
21	1F		B59-1034-00	INSTRUCTION CARD ACSY	E,E2,E3
11	1E	∗	B62-0623-00	INSTRUCTION MANUAL (ENGLISH)	
12	1F	∗	B62-0624-00	INSTRUCTION MANUAL (GERMAN)	E,E2
13	1F	∗	B62-0625-00	INSTRUCTION MANUAL (SPANISH)	E2
14	1F	∗	B62-0626-00	INSTRUCTION MANUAL (FRENCH)	E2,E3
15	1F	∗	B62-0650-00	INSTRUCTION MANUAL (ITALIAN)	E
16	1F	∗	B62-0651-00	INSTRUCTION MANUAL (NETHERLAND)	E3
17	2C	∗	B72-1059-04	MODEL NAME PLATE	K,M2
17	2C	∗	B72-1061-04	MODEL NAME PLATE	E,E2,E3
18	2D		E04-0167-05	RF COAXIAL CABLE RECEPTACLE	
19	1E		E07-0751-05	DIN PLUG (7 PIN) ACSY	
20	1E		E07-1351-05	DIN PUUG (13 PIN) ACSY	
23	2D		E23-0992-04	EARTH LUG (ANT)	
24	1E		E30-3157-15	DC CORD ACSY	
25	2B		E37-0499-05	FLAT CABLE (26PIN)	
26	1C		E37-0508-05	LEAD WIRE WITH CONNE CTOR (2P)	
27	2B		E37-0532-05	FLAT CABLE	
28	2B	∗	E37-0589-05	FLAT COBLE (16P)	
29	1B,1C	∗	E37-0590-05	FLAT CABLE (16P)	
30	1C	∗	E37-0591-05	FLAT CABLE (16P)	
31	1C	∗	E37-0641-05	LEAD WIRE WITH MINIPIN PLUG	
32	1B	∗	E37-0642-05	LEAD WIRE WITH MINIPIN PLUG	
33	2B	∗	E37-0643-05	LEAD WIRE WITH CONNECTOR (PHONE)	
34	2B	∗	E37-0644-05	LEAD WIRE WITH CONNECTOR	
35	1C	∗	E37-0645-05	LEAD WIRE WITH CONNECTOR (6P)	
36	1E		F05-2531-05	FUSE (BLADE;25A/32V) ACSY	
37	1E		F06-4027-05	FUSE (BLADE;4A/32V) ACSY	
38	2C		F09-0438-15	FAN MOTOR	
-		∗	F09-0453-05	CAP (ACC2)	E,E2,E3
-			F29-0014-05	INSULATING BUSH	
41	2B		G02-0575-04	FLAT SPRING (TX-RX IC)	
42	1C		G02-0709-04	FLAT SPRING (AVR)	
43	3A	∗	G02-0800-04	FLAT SPRING (MAIN KNOB)	
44	2A,2D		G10-0676-04	FIBROUS SHEET (CASE)	
-			G10-0697-04	FIBROUS SHEET (CASE)	
46	3A		G10-0732-04	FIBROUS SHEET	
47	2C		G10-0787-04	FIBROUS SHEET (PLL)	
48	2D		G13-0631-04	CUSHION	
-			G13-0872-04	CUSHION (DRU-3A)	
-			G13-1327-04	CUSHION	
53	1D		G13-1498-04	CUSHION (SP)	

Ref. No.	Address	New parts	Parts No.	Description	Destination
54	1D		G13-1511-04	CUSHION (FINAL)	
55	2E	∗	H10-6602-02	FOAM PACKING MOLD (F)	
56	2F	∗	H10-6603-02	FOAM PACKING MOLD (R)	
57	2F		H20-1425-03	PROTECTION COVER	
58	1E		H25-0029-04	BAG (FUSE,DIN)	
59	2E		H25-0079-04	BAG (MIC)	
82	1E		H25-0096-04	BAG (LINE FILTER,BAND)	E,E2,E3
60	1E		H25-0708-04	BAG (DC CORD)	
61	2F	∗	H52-0775-02	ITEM CARTON CASE	
62	3F	∗	H62-0689-03	OUTER CARTON CASE	
63	3D		J02-0440-04	FOOT (F)	
64	2A,2C		J02-0441-05	FOOT (SIDE)	
65	2C,3D		J02-0442-04	FOOT (F)	
66	3D		J02-0475-05	FOOT (BACK)	
67	1C		J19-1458-05	HOLDER (TX-RX)	
68	3B		J31-0141-04	COLLAR (MIC)	
-			J61-0307-05	BAND (RAT-6P AT)	
69	1E		J61-0307-05	BAND ACSY	E,E2,E3
70	2B		K01-0420-05	HANDLE ASSY	
71	3A	∗	K21-1103-03	KNOB (MAIN)	
72	3B	∗	K29-5095-03	KEYTOP (DSP)	
73	3A	∗	K29-5096-03	KEYTOP (POWER)	
74	3B	∗	K29-5097-03	KEYTOP (10 KEY)	
75	3A	∗	K29-5098-04	KNOB (IN)	
76	3A	∗	K29-5099-04	KNOB (OUT)	
77	3A	∗	K29-5100-03	KNOB (RIT,MULTI)	
78	3B	∗	K29-5110-03	KEYTOP (FUNC)	
79	3A	∗	K29-5111-04	KNOB RING (MAIN)	
83			L79-1408-05	LINE FILTER ACSY	E,E2,E3
80	2C		N15-1040-46	FLAT WASHER (GND)	
A	2B		N32-2606-46	FLAT HEAD MACHIN SCREW (LCD)	
B	2B,3B		N32-3006-46	FLAT HEAD MACHIN SCREW (SUB P)	
C	1A,3D		N33-3006-45	OVAL HEAD MACHIN SCREW (CASE)	
D	1D,2D	∗	N33-3020-45	OVAL HEAD MACHIN SCREW (FAN)	
E	2C		N35-4010-46	BINDING HEAD MACHINE SCREW	
F	1C		N67-3010-46	PAN HEAD SEMS SCREW (FINAL)	
G	1D		N87-3006-46	BRAZIER HEAD TAPTITE SCREW	
H	1B,1C		N87-3008-46	BRAZIER HEAD TAPTITE SCREW	
J	3A		N90-3006-45	TP HEAD MACHIN SCREW	
-			S50-1406-05	TACT SWITCH (MIC PTT)	
MIC	2E		T91-0352-15	MICROPHONE ACSY	
SP	1D		T07-0252-15	LOUDSPEAKER (FULLRANGE)	
81	2B		W02-1836-05	ENCODER (MAIN)	
BAT	3B		W09-0873-05	LITHIUM CELL (3V/220mAh)	
FINAL UNIT (X45-353X-XX) 0-10 : K,M2 2-71 : E,E2,E3					
C1			CK73FB1H103K	CHIP C 0.010UF K	
C2			CK73FB1E104K	CHIP C 0.10UF K	
C3			CK73FB1H102K	CHIP C 1000PF K	
C4			CC73FSL1H821J	CHIP C 820PF J	
C5			CK73FB1H103K	CHIP C 0.010UF K	
C6			CK73FB1E104K	CHIP C 0.10UF K	
C7,8			CK73FB1H102K	CHIP C 1000PF K	
C9,10			CK73FB1E104K	CHIP C 0.10UF K	

PARTS LIST

FINAL UNIT (X45-353X-XX)

Ref. No.	Address	New parts	Parts No.	Description			Destination
C11			CE04EW1E100M	ELECTRO	10UF	25WV	
C12,13			CK73FB1H103K	CHIP C	0.010UF	K	
C14			CK73FB1E104K	CHIP C	0.10UF	K	
C15			CK73FB1H102K	CHIP C	1000PF	K	
C16			C90-2193-05	ELECTRO	39UF	25WV	
C17			CE04EW1E100M	ELECTRO	10UF	25WV	
C18			CK73FB1E104K	CHIP C	0.10UF	K	
C19			CC45FSL2H221J	CERAMIC	220PF	J	
C20			CK73FB1E104K	CHIP C	0.10UF	K	
C21			CK73FB1H472K	CHIP C	4700PF	K	
C22			CM73F2H102J	CHIP C	1000PF	J	
C23,24			C91-1004-05	CHIP C	6800PF	J	
C25			CK73FB1E104K	CHIP C	0.10UF	K	
C26			CK73FB1H102K	CHIP C	1000PF	K	
C27			CK73FB1H103K	CHIP C	0.010UF	K	
C28			CM73F2H561J	CHIP C	560PF	J	
C29			CK73FB1E104K	CHIP C	0.10UF	K	
C30			CC45FSL2H151J	CERAMIC	150PF	J	
C31			CK73FB1E104K	CHIP C	0.10UF	K	
C32			CM73F2H122J	CHIP C	1200PF	J	
C33			C90-2194-05	ELECTRO	220UF	25WV	
C34			CK73FB1E104K	CHIP C	0.10UF	K	
C35			CC73FSL1H221J	CHIP C	220PF	J	
C36			CC73FCH1H101J	CHIP C	100PF	J	
C37			CC45FCH2H030C	CERAMIC	3.0PF	C	
C38			CC73FCH1H560J	CHIP C	56PF	J	
C39			CC73FSL1H221J	CHIP C	220PF	J	
C40-42			CK73FB1H103K	CHIP C	0.010UF	K	
C43			CC73FCH1H680J	CHIP C	68PF	J	
C44			CC73FCH1H121J	CHIP C	120PF	J	
C45			CC73FCH1H560J	CHIP C	56PF	J	
C46			C91-1075-05	CERAMIC	470PF	K	
C47			CK73FB1H103K	CHIP C	0.010UF	K	
C48			CK73FB1E104K	CHIP C	0.10UF	K	
C49			CE04EW1E102M	ELECTRO	1000UF	25WV	
C50-52			CK73FB1H103K	CHIP C	0.010UF	K	
C53			CK73FB1E104K	CHIP C	0.10UF	K	
C54			CK73FB1H102K	CHIP C	1000PF	K	
C55-57			CK73FB1E104K	CHIP C	0.10UF	K	
C60			CK73FB1E104K	CHIP C	0.10UF	K	
C61,62			CE04EW1E100M	ELECTRO	10UF	25WV	
C63			CE04EW1E102M	ELECTRO	1000UF	25WV	
C64,65			CK73FB1E104K	CHIP C	0.10UF	K	
C66			CK73FB1H103K	CHIP C	0.010UF	K	
C67			CE04EW1E471M	ELECTRO	470UF	25WV	
C68-74			CK73FB1H103K	CHIP C	0.010UF	K	
C75			CK73FB1H102K	CHIP C	1000PF	K	
C76			CE04EW1A470M	ELECTRO	47UF	10WV	
C77,78			CK73FB1H103K	CHIP C	0.010UF	K	
C79,80			CK73FB1H102K	CHIP C	1000PF	K	
C81-85			CK73FB1H103K	CHIP C	0.010UF	K	
C86-94			CK73FB1H102K	CHIP C	1000PF	K	
C95,96			CC45FSL2H221J	CERAMIC	220PF	J	
C97			CK73FB1E104K	CHIP C	0.10UF	K	
C99			CE04EW1E100M	ELECTRO	10UF	25WV	
C100			CK73FB1E104K	CHIP C	0.10UF	K	
C101			CM93D2H821J	MICA	820PF	J	
C102			CC45FSL2H561J	CERAMIC	560PF	J	
C103			CM93D2H182J	MICA	1800PF	J	
C104			CC45FSL2H181J	CERAMIC	180PF	J	

Ref. No.	Address	New parts	Parts No.	Description			Destination
C105			CM93D2H821J	MICA	820PF	J	
C106			CK73FB1H103K	CHIP C	0.010UF	K	
C107			CC73FSL1H561J	CHIP C	560PF	J	
C201			CC45FSL2H561J	CERAMIC	560PF	J	
C202			CC45FSL2H121J	CERAMIC	120PF	J	
C203			CC45FSL2H331J	CERAMIC	330PF	J	
C204			CC45FSL2H391J	CERAMIC	390PF	J	
C205			CC45FSL2H471J	CERAMIC	470PF	J	
C206-208			CC45FSL2H151J	CERAMIC	150PF	J	
C209			CK73FB1H103K	CHIP C	0.010UF	K	
C301			CC45FSL2H271J	CERAMIC	270PF	J	
C302			CC45FSL2H151J	CERAMIC	150PF	J	
C303			CC45FSL2H271J	CERAMIC	270PF	J	
C304			CC45FSL2H221J	CERAMIC	220PF	J	
C305			CC45FSL2H680J	CERAMIC	68PF	J	
C306			CC45FSL2H271J	CERAMIC	270PF	J	
C307			CK73FB1H103K	CHIP C	0.010UF	K	
C401			CC45FSL2H181J	CERAMIC	180PF	J	E,E2,E3
C402			CC45FSL2H470J	CERAMIC	47PF	J	E,E2,E3
C403			CC45FSL2H271J	CERAMIC	270PF	J	E,E2,E3
C404,405			CC45FSL2H151J	CERAMIC	150PF	J	E,E2,E3
C406			CK73FB1H103K	CHIP C	0.010UF	K	E,E2,E3
C407			CC45FSL2H181J	CERAMIC	180PF	J	
C408			CC45FSL2H390J	CERAMIC	39PF	J	
C409			CC45FSL2H181J	CERAMIC	180PF	J	K,M2
C409			CC45FSL2H331J	CERAMIC	330PF	J	E,E2,E3
C410,411			CC45FSL2H151J	CERAMIC	150PF	J	
C412			CK73FB1H103K	CHIP C	0.010UF	K	
C413		*	CC45FSL2H050C	CERAMIC	5.0PF	C	K,M2
C415			CC45FSL2H121J	CERAMIC	120PF	J	K,M2
C416		*	CC45FSL2H050C	CERAMIC	5.0PF	C	E,E2,E3
C501			CC45FSL2H101J	CERAMIC	100PF	J	
C502			CC45FSL2H470J	CERAMIC	47PF	J	
C503			CC45FSL2H221J	CERAMIC	220PF	J	
C504			CC45FSL2H150J	CERAMIC	15PF	J	
C505			CC45FSL2H121J	CERAMIC	120PF	J	
C506			CK73FB1H103K	CHIP C	0.010UF	K	
C601			CC45FSL2H680J	CERAMIC	68PF	J	
C602			CC45FSL2H470J	CERAMIC	47PF	J	
C603			CC45FSL2H121J	CERAMIC	120PF	J	
C604			CC45FSL2H100D	CERAMIC	10PF	D	
C605			CC45FSL2H120J	CERAMIC	12PF	J	
C606			CC45FSL2H680J	CERAMIC	68PF	J	
C607			CK73FB1H103K	CHIP C	0.010UF	K	
C800			CM93D2H560J	MICA	56PF	J	
C801-804		*	C91-3115-05	HV C	10PF	2KV	
C805		*	C91-3116-05	HV C	18PF	2KV	
C806		*	C91-3118-05	HV C	39PF	2KV	
C807-811		*	C91-3123-05	HV C	150PF	3KV	
C812-815		*	C91-3115-05	HV C	10PF	2KV	
C816		*	C91-3116-05	HV C	18PF	2KV	
C817		*	C91-3118-05	HV C	39PF	2KV	
C818-822		*	C91-3123-05	HV C	150PF	3KV	
C823-869			CK73FB1H103K	CHIP C	0.010UF	K	
C835-869			CK73FB1H103K	CHIP C	0.010UF	K	
C870-873		*	C91-3115-05	HV C	10PF	2KV	
C874,875			CK73FB1H103K	CHIP C	0.010UF	K	
C876-879		*	C91-3115-05	HV C	10PF	2KV	
C901			CK73FB1E104K	CHIP C	0.10UF	K	
C902			CC73FCH1H100D	CHIP C	10PF	D	

TS-570D

PARTS LSIT

FINAL UNIT (X45-353X-XX)

Ref. No.	Address	New parts	Parts No.	Description	Destination
C903			CE04EW1H470M	ELECTRO 47UF 50WV	
C951-954			CK73EF1C105Z	CHIP C 1.0UF Z	
TC1			C05-0030-15	TRIMMER CAPACITOR 20PF	
TC2			C05-0031-15	TRIMMER CAPACITOR 10PF	
CN1			E04-0191-05	RF COAXIAL CABLE RECEPTACLE	
CN2			E04-0154-05	RF COAXIAL CABLE RECEPTACLE	
CN3,4			E40-5764-05	PIN CONNECTOR FOR INSIDE	
CN5			E40-3246-05	PIN CONNECTOR FOR INSIDE (FAN)	
CN6			E40-3240-05	PIN CONNECTOR FOR INSIDE (5P)	
CN8			E23-0996-05	TERMINAL	
CN10-12			E23-0996-05	TERMINAL	
CN13			E40-3237-05	PIN CONNECTOR FOR INSIDE (SP)	
CN14,15			E04-0154-05	RF COAXIAL CABLE RECEPTACLE	
CN901			E40-3300-05	PIN CONNECTOR FOR INSIDE (PHONE)	
J901			E11-0438-05	PHONE JACK	
W1	1C	*	E37-0594-05	LEAD WIRE WITH CONNECTOR	
W4	1C		E37-0198-05	LEAD WIRE WITH MINIPIN PLUG	
F1			F53-0093-05	FUSE (5A/125V)	
F2			F06-4027-05	FUSE BLADE (4A/32V)	
A1,2			J13-0410-05	FUSE HOLDER	
L2			L40-1015-48	SMALL FIXED INDUCTOR (100UH)	
L3			L40-3395-48	SMALL FIXED INDUCTOR (3.3UH)	
L4			L39-0481-05	TROIDAL COIL	
L5-7			L33-0699-05	CHOKE COIL	
L8			L39-1257-05	TROIDAL COIL	
L9			L33-0617-15	CHOKE COIL	
L10			L40-4795-48	SMALL FIXED INDUCTOR (4.7UH)	
L11,12			L33-0699-05	CHOKE COIL	
L13			L39-0482-05	TROIGAL COIL	
L14			L33-0617-15	CHOKE COIL	
L15			L33-0651-05	CHOKE COIL	
L16			L39-1252-15	TROIDAL COIL	
L17			L40-2221-33	SMALL FIXED INDUCTOR	
L18			L39-0480-15	TROIDAL COIL	
L19			L40-2221-33	SMALL FIXED INDUCTOR	
L20			L39-0496-05	TROIDAL COIL	
L21			L39-0415-25	TROIDAL COIL	
L22,23			L40-2785-48	SMALL FIXED INDUCTOR (270NH)	
L24,25			L79-0558-05	FILTER	E,E2,E3
L26			L40-1001-12	SMALL FIXED INDUCTOR	
L27			L40-1015-48	SMALL FIXED INDUCTOR (100UH)	
L28,29			L40-1005-48	SMALL FIXED INDUCTOR (10UH)	
L30-32			L40-1001-12	SMALL FIXED INDUCTOR	
L101			L39-1259-05	TROIDAL COIL	
L102			L39-1260-05	TROIDAL COIL	
L103			L40-1015-48	SMALL FIXED INDUCTOR (100UH)	
L201			L39-1224-05	TROIDAL COIL	
L202			L39-1225-05	TROIDAL COIL	
L203			L40-1015-48	SMALL FIXED INDUCTOR (100UH)	
L301			L39-1266-05	TROIDAL COIL	
L302			L39-1258-05	TROIDAL COIL	
L303			L40-1015-48	SMALL FIXED INDUCTOR (100UH)	
L401			L39-1221-05	TROIDAL COIL	E,E2,E3
L402			L39-1220-05	TROIDAL COIL	E,E2,E3
L403			L40-1015-48	SMALL FIXED INDUCTOR	E,E2,E3
L404			L39-1221-05	TROIDAL COIL	
L405			L39-1220-05	TROIDAL COIL	
L406			L40-1015-48	SMALL FIXED INDUCTOR (100UH)	

Ref. No.	Address	New parts	Parts No.	Description	Destination
L501			L34-1280-05	COIL (6.5T)	
L502			L34-1279-05	COIL (7.5T)	
L503			L40-1015-48	SMALL FIXED INDUCTOR (100UH)	
L601			L34-1282-05	COIL (4.5T)	
L602			L34-1281-05	COIL (5.5T)	
L603			L40-1015-48	SMALL FIXED INDUCTOR (100UH)	
L801,802			L39-1264-05	TROIDAL COIL	
L803			L39-1263-05	TROIDAL COIL	
L804		*	L34-4476-05	COIL (7.5T)	
L805-807		*	L34-4474-05	COIL (1.5T)	
L808		*	L34-4488-05	COIL (0.5T)	
L809		*	L34-4489-05	COIL (3.5T)	
L810-832			L40-1015-48	SMALL FIXED INDUCTOR (100UH)	
T101			L92-0104-05	TROIDAL CORE	
T102			L92-0104-05	TROIDAL CORE	
T201			L92-0107-05	TROIDAL CORE	
T202			L92-0107-05	TROIDAL CORE	
T301			L92-0108-05	TROIDAL CORE	
T302			L92-0108-05	TROIDAL CORE	
T401			L92-0108-05	TROIDAL CORE	E,E2,E3
T402			L92-0108-05	TROIDAL CORE	E,E2,E3
T404			L92-0108-05	TROIDAL CORE	
T405			L92-0108-05	TROIDAL CORE	
T801,802			L92-0119-05	TROIDAL CORE	
T803			L92-0119-05	TROIDAL CORE	
R1			RK73FB2A331J	CHIP R 330 J 1/10W	
R2			RK73FB2A681J	CHIP R 680 J 1/10W	
R3			RK73FB2A101J	CHIP R 100 J 1/10W	
R4,5			RK73FB2A6R8J	CHIP R 6.8 J 1/10W	
R6			R92-1221-05	CHIP R 82 J 1/4W	
R7			R92-1242-05	CHIP R 6.8 J 1/4W	
R8			R92-1243-05	CHIP R 8.2 J 1/4W	
R9			RK73FB2A331J	CHIP R 330 J 1/10W	
R10			R92-1318-05	CHIP R 100 J 1W	
R11,12			R92-0696-05	CHIP R 33 J 1/4W	
R13			R92-1318-05	CHIP R 100 J 1W	
R14-17			RS14CB3A5R6J	FL-PROOF RS 5.6 J 1W	
R18,19			RS14CB3A150J	FL-PROOF RS 15 J 1W	
R20			RK73FB2A391J	CHIP R 390 J 1/10W	
R21,22			RS14CB3A4R7J	FL-PROOF RS 4.7 J 1W	
R23			RK73FB2A4R7J	CHIP R 4.7 J 1/10W	
R24			R92-0686-05	CHIP R 33 J 1/2W	
R25			R92-1212-05	CHIP R 27 J 1/2W	
R26,27			R92-1213-05	CHIP R 100 J 1/2W	
R28			RK73FB2A470J	CHIP R 47 J 1/10W	
R29-32			RK73FB2A104J	CHIP R 100K J 1/10W	
R33			RK73FB2A102J	CHIP R 1.0K J 1/10W	
R34			R92-1292-05	CHIP R 68 J 1W	
R35			R92-1288-05	CHIP R 56 J 1W	
R36,37			RK73FB2A102J	CHIP R 1.0K J 1/10W	
R38,39			RK73FB2A181J	CHIP R 180 J 1/10W	
R40,41			RK73FB2A103J	CHIP R 10K J 1/10W	
R42,43			RK73FB2A563J	CHIP R 56K J 1/10W	
R44,45			RK73FB2A103J	CHIP R 10K J 1/10W	
R46			RK73FB2A101J	CHIP R 100 J 1/10W	
R47			RK73FB2A121J	CHIP R 120 J 1/10W	
R48			RK73FB2A101J	CHIP R 100 J 1/10W	
R49			RK73FB2A121J	CHIP R 120 J 1/10W	
R50			RK73FB2A822J	CHIP R 8.2K J 1/10W	
R51			RK73FB2A682J	CHIP R 6.8K J 1/10W	

PARTS LIST

FINAL UNIT (X45-353X-XX)
CONTROL UNIT (X53-369X-XX)

Ref. No.	Address	New parts	Parts No.	Description	Desti-nation
R52,53			RK73FB2A103J	CHIP R 10K J 1/10W	
R54-56			RK73FB2A101J	CHIP R 100 J 1/10W	
R57-60		*	R92-2569-05	JUMPER WIRE 0 OHM	K,M2
R901,902			R92-1205-05	CHIP R 120 J 1/4W	
VR1			R12-6730-05	TRIMMING POT. 220	
VR2			R12-6737-05	TRIMMING POT. 3.3K	
VR3			R12-6730-05	TRIMMING POT. 220	
VR4			R12-6738-05	TRIMMING POT. 4.7K	
W2,3			R92-0150-05	JUMPER REST 0 OHM	
K1			S51-2417-05	RELAY	
K2			S51-1429-05	RELAY	
K3			S51-2417-05	RELAY	
K4			S76-0414-05	RELAY	
K101,102			S51-1420-05	RELAY	
K201,202			S51-1420-05	RELAY	
K301,302			S51-1420-05	RELAY	
K401,402			S51-1420-05	RELAY	E,E2,E3
K403,404			S51-1420-05	RELAY	
K501,502			S51-1420-05	RELAY	
K601,602			S51-1420-05	RELAY	
K801-814		*	S76-0419-05	RELAY	
K815-821			S76-0415-05	RELAY	
K822,823		*	S76-0419-05	RELAY	
D1			MA27T-B	VARISTOR	
D2-4			MA27-B	VARISTOR	
D5,6			1SS101	DIODE	
D7-9			LFB01	DIORD	
D10,11			DSA301LA	DIORD	
D12			SG-5L(R)	DIORD	
D13			ERZ-M10DK220	SURGE ABSORBER	
D14			02CZ18(X,Y)	ZENER DIORD	
D15			LFB01	DIORD	
D16			DAN202K	DIORD	
D17			LFB01	DIORD	
D18-23			1SS226	DIORD	
D24,25			1SS101	DIORD	
D26			DSA301LA	DIORD	
D101			LFB01	DIORD	
D201			LFB01	DIORD	
D301			LFB01	DIORD	
D401			LFB01	DIORD	E,E2,E3
D402			LFB01	DIORD	
D501			LFB01	DIORD	
D601			LFB01	DIORD	
D801-823			LFB01	DIORD	
IC1			TA7805S	IC (VOLTAGE REGULATOR/ +5V)	
IC2			TA7808S	IC (REGULATOR)	
IC3			TA75S393F	IC	
IC4			SN74S74NS	IC (FLIP-FLOP)	
IC5		*	M54562P	IC (500mA DARLINGTON)	
IC6		*	NJU3714G	IC	
IC7-9			UPD6345GS	IC	
IC10		*	TA7810S	IC (REGULATOR)	
Q1			2SC1971	TRANSISTOR (PRI-DRIVAMP)	
Q2,3			2SC3133	TRANSISTOR (DRIV AMP)	
Q4,5			2SC2879	TRANSISTOR (POWER AMP)	
Q6			2SC3421(Y)	TRANSISTOR	
Q7-9			FMC2	TRANSISTOR	
Q10			DTC114EK	DIGITAL TRANSISTOR	

Ref. No.	Address	New parts	Parts No.	Description	Desti-nation
Q11			DTC143TK	DIGITAL TRANSISTOR	
Q12,13			DTD123EK	DIGITAL TRANSISTOR	
Q14,15			2SC2714(Y)	TRANSISTOR	
Q16			DTC114EK	DIGITAL TRANSISTOR	
TH1			5TP41L	THERMISTOR	
CONTROL UNIT (X53-369X-XX)					
0-10 : K 0-21 : M2 2-71 : E 2-72 : E2 2-73 : E3					
C1			CK73FB1H103K	CHIP C 0.010UF K	
C2			C92-0009-05	CHIP-TAN 4.7UF 10WV	
C3,4			CK73FB1H102K	CHIP C 1000PF K	
C7			CK73FB1H103K	CHIP C 0.010UF K	
C8			C92-0009-05	CHIP-TAN 4.7UF 10WV	
C9			CK73FF1E104Z	CHIP C 0.10UF Z	
C10			CK73FB1H102K	CHIP C 1000PF K	
C11			CK73FF1C105Z	CHIP C 1.0UF Z	
C12			CK73FB1H103K	CHIP C 0.010UF K	
C13			CK73FF1E104Z	CHIP C 0.10UF Z	
C14,15			CC73FCH1H330J	CHIP C 33PF J	
C16,17			CK73FB1H103K	CHIP C 0.010UF K	
C18			CK73FF1E104Z	CHIP C 0.10UF Z	
C19			CK73FF1C105Z	CHIP C 1.0UF Z	
C20,21			CK73FB1H103K	CHIP C 0.010UF K	
C22,23			C92-0037-05	CHIP-ELE 10UF 16WV	
C24-27			CK73FB1H102K	CHIP C 1000PF K	
C28,29			CK73FF1E104Z	CHIP C 0.10UF Z	
C30			CK73FF1C105Z	CHIP C 1.0UF Z	
C31,32			CK73FF1E104Z	CHIP C 0.10UF Z	
C33			C92-0040-05	CHIP-ELE 47UF 16WV	
C36,37			CC73FCH1H220J	CHIP C 22PF J	
C103			CK73FF1E104Z	CHIP C 0.10UF Z	
C104-107			CK73FB1H102K	CHIP C 1000PF K	
C108,109			CK73FF1E104Z	CHIP C 0.10UF Z	
C110-118			CK73FB1H102K	CHIP C 1000PF K	
C119			CK73FF1E104Z	CHIP C 0.10UF Z	
C120			CK73FB1H102K	CHIP C 1000PF K	
C121-124			CK73FB1H103K	CHIP C 0.010UF K	
C125			CK73FF1E104Z	CHIP C 0.10UF Z	
C126			CK73FB1H103K	CHIP C 0.010UF K	
C127,128			CK73FB1H102K	CHIP C 1000PF K	
C129-134			CK73FB1H103K	CHIP C 0.010UF K	
C135-150			CK73FB1H102K	CHIP C 1000PF K	
C151-154			CC73FCH1H101J	CHIP C 100PF J	
C155			CK73FF1E104Z	CHIP C 0.10UF Z	
C156			CK73FB1H102K	CHIP C 1000PF K	
C158-162			CK73FB1H102K	CHIP C 1000PF K	
C163-169			CK73FB1H102K	CHIP C 1000PF K	
C170-172			CK73FF1E104Z	CHIP C 0.10UF Z	
C173-183			CK73FB1H102K	CHIP C 1000PF K	
C184			CK73FF1E104Z	CHIP C 0.10UF Z	
C501			C92-0004-05	CHIP-TAN 1.0UF 16WV	
C502,503			CK73GB1H102K	CHIP C 1000PF K	
C504,505			CK73EB1H223K	CHIP C 0.022UF K	
C506-509			CK73FF1E104Z	CHIP C 0.10UF Z	
C510			CC73GSL1H221J	CHIP C 220PF J	
C511,512			CK73FF1E104Z	CHIP C 0.10UF Z	
C513			CC73FCH1H102J	CHIP C 1000PF J	
C514			C92-0004-05	CHIP-TAN 1.0UF 16WV	
C515			C92-0038-05	CHIP-ELE 22UF 16WV	
C516			C90-2073-05	ELECTRO 6.8UF 16WV	
C517			C92-0037-05	CHIP-ELE 10UF 16WV	

TS-570D

PARTS LSIT

CONTROL UNIT (X53-369X-XX)

Ref. No.	Address	New parts	Parts No.	Description	Destination
C518,519			CK73FF1E104Z	CHIP C 0.10UF Z	
C520,521			CK73GB1H102K	CHIP C 1000PF K	
C522			C92-0037-05	CHIP-ELE 10UF 16WV	
C523,524			CK73FF1E104Z	CHIP C 0.10UF Z	
C525-527			CK73GB1H562K	CHIP C 5600PF K	
C528			CK73FB1H682K	CHIP C 6800PF K	
C530			CK73GB1H102K	CHIP C 1000PF K	
C531			CK73GB1H562K	CHIP C 5600PF K	
C532			C92-0037-05	CHIP-ELE 10UF 16WV	
C533			CK73GB1H103K	CHIP C 0.010UF K	
C534			CC73GCH1H101J	CHIP C 100PF J	
C535			C92-0037-05	CHIP-ELE 10UF 16WV	
C537			C92-0040-05	CHIP-ELE 47UF 16WV	
C538			CK73GB1H103K	CHIP C 0.010UF K	
C539			CK73GB1H102K	CHIP C 1000PF K	
C540			CK73FB1E104K	CHIP C 0.10UF K	
C541			CK73FF1C105Z	CHIP C 1.0UF Z	
C542-544			C92-0507-05	CHIP-TAN 4.7UF 6.3WV	
C546-549			C92-0507-05	CHIP-TAN 4.7UF 6.3WV	
C550			C92-0040-05	CHIP-ELE 47UF 16WV	
C601			CK73FB1E104K	CHIP C 0.10UF K	
C602			CC73GSL1H471J	CHIP C 470PF J	
C603			CK73FB1E104K	CHIP C 0.10UF K	
C604			CC73GSL1H471J	CHIP C 470PF J	
C605			CK73FB1E104K	CHIP C 0.10UF K	
C606			CC73GSL1H471J	CHIP C 470PF J	
C607			CK73FB1E104K	CHIP C 0.10UF K	
C608			CC73GSL1H471J	CHIP C 470PF J	
C609			CK73FB1E104K	CHIP C 0.10UF K	
C610			CC73GSL1H471J	CHIP C 470PF J	
C611			CK73FB1E104K	CHIP C 0.10UF K	
C612			CC73GSL1H471J	CHIP C 470PF J	
C613,614			CC73GCH1H100D	CHIP C 10PF D	
C615-617			CK73GB1H103K	CHIP C 0.010UF K	
C701-733			CC73GCH1H101J	CHIP C 100PF J	
CN1			E40-5736-05	PIN CONNECTOR FOR INSIDE (26P)	
CN2			E40-3252-05	PIN CONNECTOR FOR INSIDE (8P)	
CN3			E40-5761-05	PIN CONNECTOR FOR INSIDE (26P)	
CN4,5			E40-5762-05	PIN CONNECTOR FOR INSIDE (16P)	
CN6			E40-3239-05	PIN CONNECTOR FOR INSIDE (4P)	
CN501		*	E02-2032-05	IC SOCKET (32P)	
CN502			E40-5762-05	PIN CONNECTOR FOR INSIDE (16P)	
CN503			E40-3247-05	PIN CONNECTOR FOR INSIDE (3P)	
W501	2B	*	E37-0646-05	LEAD WIRE WITH CONNECTOR	
CN7			J19-1570-05	HOLDER	
L1,2			L40-4705-48	SMALL FIXED INDUCTOR (47UH)	
L3,4			L40-1001-18	SMALL FIXED INDUCTOR	
L5,6			L40-1292-18	SMALL FIXED INDUCTOR	
L7			L40-1095-48	SMALL FIXED INDUCTOR (1UH)	
L8-10			L40-4705-48	SMALL FIXED INDUCTOR (47UH)	
L11			L40-1292-18	SMALL FIXED INDUCTOR	
L12			L40-4705-48	SMALL FIXED INDUCTOR (47UH)	
L501,502			L40-4705-48	SMALL FIXED INDUCTOR (47UH)	
L503			L40-1292-18	SMALL FIXED INDUCTOR	
L504			L40-1095-48	SMALL FIXED INDUCTOR (1UH)	
L505			L40-1001-18	SMALL FIXED INDUCTOR	
X1		*	L77-1681-05	CRYSTAL RESONATOR (4.51MHZ)	
X2		*	L77-1680-05	CRYSTAL RESONATOR (11.0592MHZ)	
X501		*	L77-1679-05	CRYSTAL RESONATOR (12.288MHZ)	

Ref. No.	Address	New parts	Parts No.	Description	Destination
CP1-7		*	R90-0754-05	MULTI-COMP R	
CP8,9			R90-0748-05	MULTI-COMP R 47K x 4	
CP10		*	R90-0754-05	MULTI-COMP R	
CP11			R90-0748-05	MULTI-COMP R 47K x 4	
CP12			R90-0714-05	MULTI-COMP 10K x 4	
CP13		*	R90-0754-05	MULTI-COMP R	
CP506-511		*	R90-0754-05	MULTI-COMP R	
R1			RK73FB2A102J	CHIP R 1.0K J 1/10W	
R2			RK73FB2A472J	CHIP R 4.7K J 1/10W	
R3			RK73FB2A104J	CHIP R 100K J 1/10W	
R4			RK73FB2A155J	CHIP R 1.5M J 1/10W	
R5-7			RK73FB2A472J	CHIP R 4.7K J 1/10W	
R8			RK73FB2A473J	CHIP R 47K J 1/10W	
R9			RK73FB2A102J	CHIP R 1.0K J 1/10W	
R10,11			RK73FB2A100J	CHIP R 10 J 1/10W	
R12			RK73FB2A564J	CHIP R 560K J 1/10W	
R13			RK73FB2A103J	CHIP R 10K J 1/10W	
R14			RK73FB2A102J	CHIP R 1.0K J 1/10W	
R15			RK73FB2A473J	CHIP R 47K J 1/10W	
R16			RK73FB2A105J	CHIP R 1.0M J 1/10W	
R17			R92-0670-05	CHIP R 0 OHM	
R18			RK73FB2A473J	CHIP R 47K J 1/10W	
R19			RK73FB2A102J	CHIP R 1.0K J 1/10W	
R21			R92-0670-05	CHIP R 0 OHM	
R22			RK73FB2A102J	CHIP R 1.0K J 1/10W	
R24			RK73FB2A102J	CHIP R 1.0K J 1/10W	M2,E3
R25			RK73FB2A102J	CHIP R 1.0K J 1/10W	E,E2,E3
R26			RK73FB2A102J	CHIP R 1.0K J 1/10W	M2,E2
R27			RK73FB2A102J	CHIP R 1.0K J 1/10W	E
R31,32			RK73FB2A102J	CHIP R 1.0K J 1/10W	
R33			RK73FB2A103J	CHIP R 10K J 1/10W	
R34			RK73FB2A473J	CHIP R 47K J 1/10W	
R35			RK73FB2A472J	CHIP R 4.7K J 1/10W	
R36			RK73FB2A471J	CHIP R 470 J 1/10W	
R37			RK73FB2A472J	CHIP R 4.7K J 1/10W	
R38,39			RK73FB2A473J	CHIP R 47K J 1/10W	
R41			RK73FB2A102J	CHIP R 1.0K J 1/10W	K,E,E2,E3
R42			RK73FB2A473J	CHIP R 47K J 1/10W	
R44			RK73FB2A473J	CHIP R 47K J 1/10W	
R45			RK73FB2A104J	CHIP R 100K J 1/10W	
R46			RK73FB2A470J	CHIP R 47 J 1/10W	
R47			R92-0670-05	CHIP R 0 OHM	
R101-103			RK73FB2A102J	CHIP R 1.0K J 1/10W	
R104-109			RK73FB2A101J	CHIP R 100 J 1/10W	
R114-133			RK73FB2A101J	CHIP R 100 J 1/10W	
R135-138			RK73FB2A101J	CHIP R 100 J 1/10W	
R139,140			RK73FB2A473J	CHIP R 47K J 1/10W	
R141,142			RK73FB2A103J	CHIP R 10K J 1/10W	
R143,144			RK73FB2A104J	CHIP R 100K J 1/10W	
R147,148			RK73FB2A104J	CHIP R 100K J 1/10W	
R501			RK73GB1J472J	CHIP R 4.7K J 1/16W	
R502,503			RK73GB1J102J	CHIP R 1.0K J 1/16W	
R504			RK73GB1J334J	CHIP R 330K J 1/16W	
R505			RK73GB1J472J	CHIP R 4.7K J 1/16W	
R506			RK73GB1J393J	CHIP R 39K J 1/16W	
R507,508			RK73GB1J222J	CHIP R 2.2K J 1/16W	
R509			RK73GB1J334J	CHIP R 330K J 1/16W	
R510			RK73GB1J223J	CHIP R 22K J 1/16W	
R511			RK73GB1J182J	CHIP R 1.8K J 1/16W	
R512-514			RK73GB1J103J	CHIP R 10K J 1/16W	

PARTS LIST

CONTROL UNIT (X53-369X-XX)
TX-RX UNIT (X57-500X-XX)

Ref. No.	Address	New parts	Parts No.	Description	Destination
R515			RK73GB1J102J	CHIP R 1.0K J 1/16W	
R516			RK73GB1J682J	CHIP R 6.8K J 1/16W	
R517,518			RK73GB1J103J	CHIP R 10K J 1/16W	
R519			RK73GB1J274J	CHIP R 270K J 1/16W	
R520			RK73GB1J123J	CHIP R 12K J 1/16W	
R521-523			RK73GB1J102J	CHIP R 1.0K J 1/16W	
R525			RK73GB1J100J	CHIP R 10 J 1/16W	
R528,529			RK73GB1J183J	CHIP R 18K J 1/16W	
R530,531			RK73GB1J103J	CHIP R 10K J 1/16W	
R532,533			RK73GB1J183J	CHIP R 18K J 1/16W	
R534			RK73GB1J103J	CHIP R 10K J 1/16W	
R535-537			RK73GB1J153J	CHIP R 15K J 1/16W	
R538			RK73GB1J103J	CHIP R 10K J 1/16W	
R539,540			RK73GB1J472J	CHIP R 4.7K J 1/16W	
R541			RK73GB1J223J	CHIP R 22K J 1/16W	
R542			RK73GB1J101J	CHIP R 100 J 1/16W	
R544			RK73GB1J561J	CHIP R 560 J 1/16W	
R545-550			R92-0670-05	CHIP R 0 OHM	
R553-555			R92-0670-05	CHIP R 0 OHM	
R556			RK73GB1J561J	CHIP R 560 J 1/16W	
R557			RK73GB1J682J	CHIP R 6.8K J 1/16W	
R558			RK73GB1J104J	CHIP R 100K J 1/16W	
R559-565			RK73GB1J223J	CHIP R 22K J 1/16W	
R602-604			RK73GB1J473J	CHIP R 47K J 1/16W	
R610			RK73GB1J473J	CHIP R 47K J 1/16W	
R612			RK73GB1J101J	CHIP R 100 J 1/16W	
R613			RK73GB1J473J	CHIP R 47K J 1/16W	
R615			RK73GB1J473J	CHIP R 47K J 1/16W	
R616			RK73GB1J101J	CHIP R 100 J 1/16W	
R618-621			RK73GB1J101J	CHIP R 100 J 1/16W	
R623,624			RK73GB1J473J	CHIP R 47K J 1/16W	
R625			RK73GB1J103J	CHIP R 10K J 1/16W	
R626			RK73GB1J104J	CHIP R 100K J 1/16W	
D1-4			1SS355		
D5			DAN202U		
D6,7			1SS355		
D8,9			02CZ8.2(Y)		
D10			DAN202U		
IC1			AT24C64N10SI27	IC (64kbit SERIAL EEPROM)	
IC2			CAT35C102KI	IC	
IC3			UPD75004GB-746	IC (4bit MICROPROCESSOR)	
IC4			PST9121NR	IC	
IC5			CXD1095Q		
IC6		*	M37710EFBJQF *	IC (CPU)	
IC7,8			TC4052BF	IC (4CH MPX/DE-MPX)	
IC9			NJM78L05UA	IC (VOLTAGE REGULATOR/ +5V)	
IC10			NJM78L06UA	IC (VOLTAGE REGULATOR/ +6V)	
IC11			NJM78L08UA	IC (VOLTAGE REGULATOR/ +8V)	
IC501			NJM2100M	IC (OP AMPLIFIER)	
IC502			BU4066BCFV	IC (ANALOG SWITCH X4)	
IC503			NJM2100M	IC (OP AMPLIFIER)	
IC504			AK4506-VS	IC (AD/DA-COVERTOR)	
IC505,506			NJM2100M	IC (OP AMPLIFIER)	
IC507		*	ADSP2181KS-115	IC	
IC508			TC74HC4040AF	IC (BINARY COUNTER)	
IC511			TC7S04F	IC (2CH NAND GATE)	
IC512		*	27C01012DJPHB	IC	
IC513			NJM78L05UA	IC (VOLTAGE REGULATOR/ +5V)	
Q1,2			DTC143EK	DIGITAL TRANSISTOR	
Q3,4			DTC114EK	DIGITAL TRANSISTOR	
Q5			DTA143EK	DIGITAL TRANSISTOR	
Q6			DTC143EK	DIGITAL TRANSISTOR	
Q7			DTA143EK	DIGITAL TRANSISTOR	
Q8			DTC143TK	DIGITAL TRANSISTOR	
Q9			DTC143EK	DIGITAL TRANSISTOR	
Q10			DTA143EK	DIGITAL TRANSISTOR	
Q11,12			DTC143EK	DIGITAL TRANSISTOR	

TX-RX UNIT (X57-500X-XX) 0-10 : K,M2 2-71 : E,E2,E3

Ref. No.	Address	New parts	Parts No.	Description	Destination
C1,2			CK73FB1H103K	CHIP C 0.010UF K	
C3			CC73FCH1H470J	CHIP C 47PF J	
C4			CC73FCH1H070D	CHIP C 7.0PF D	
C5			CK73FF1E104Z	CHIP C 0.10UF Z	
C6			CC73FCH1H390J	CHIP C 39PF J	
C7			CK73FB1H182K	CHIP C 1800PF K	
C8			CK73FF1C105Z	CHIP C 1.0UF Z	
C9			CK73EF1H104Z	CHIP C 0.10UF Z	
C10			CK73FF1E104Z	CHIP C 0.10UF Z	
C11			CK73FB1H472K	CHIP C 4700PF K	
C12			CK73FB1H103K	CHIP C 0.010UF K	
C13			CK73FB1H182K	CHIP C 1800PF K	
C14			CE04EW1E4R7M	ELECTRO 4.7UF 25WV	
C15			CK73FB1H103K	CHIP C 0.010UF K	
C16			CK73FB1H222K	CHIP C 2200PF K	
C17			CK73FB1H472K	CHIP C 4700PF K	
C18			CK73FB1H222K	CHIP C 2200PF K	
C19			CK73FB1H103K	CHIP C 0.010UF K	
C20			CK73FF1C105Z	CHIP C 1.0UF Z	
C21			CK73FB1H102K	CHIP C 1000PF K	
C22,23			CK73FB1H392K	CHIP C 3900PF K	
C24			CK73FF1E104Z	CHIP C 0.10UF Z	
C25,26			CK73FB1H102K	CHIP C 1000PF K	
C27			CK73FF1E104Z	CHIP C 0.10UF Z	
C28			CK73FB1H561K	CHIP C 560PF K	
C29,30			CK73FB1H222K	CHIP C 2200PF K	
C31			CK73FF1E104Z	CHIP C 0.10UF Z	
C32,33			CK73FB1H102K	CHIP C 1000PF K	
C34			CK73FF1E104Z	CHIP C 0.10UF Z	
C35			CC73FSL1H271J	CHIP C 270PF J	
C36,37			CK73FB1H102K	CHIP C 1000PF K	
C38			CK73FF1E104Z	CHIP C 0.10UF Z	
C39,40			CK73FB1H102K	CHIP C 1000PF K	
C41			CK73FF1E104Z	CHIP C 0.10UF Z	
C42,43			CC73FCH1H100D	CHIP C 10PF D	
C44			CK73FF1E104Z	CHIP C 0.10UF Z	
C45,46			CK73FB1H102K	CHIP C 1000PF K	
C47			CK73FF1E104Z	CHIP C 0.10UF Z	
C48			CC73FSL1H121J	CHIP C 120PF J	
C49,50			CK73FB1H102K	CHIP C 1000PF K	
C51			CK73FF1E104Z	CHIP C 0.10UF Z	
C52,53			CK73FB1H102K	CHIP C 1000PF K	
C54			CK73FF1E104Z	CHIP C 0.10UF Z	
C55			CC73FCH1H820J	CHIP C 82PF J	
C56,57			CK73FB1H102K	CHIP C 1000PF K	
C58			CK73FF1E104Z	CHIP C 0.10UF Z	
C59,60			CK73FB1H102K	CHIP C 1000PF K	
C61			CK73FF1E104Z	CHIP C 0.10UF Z	
C62,63			CC73FCH1H040C	CHIP C 4.0PF C	
C64			CK73FF1E104Z	CHIP C 0.10UF Z	

PARTS LSIT

TX-RX UNIT (X57-500X-XX)

Ref. No.	Address	New parts	Parts No.	Description			Desti-nation
C65,66			CK73FB1H102K	CHIP C	1000PF	K	
C67			CK73FF1E104Z	CHIP C	0.10UF	Z	
C68			CC73FCH1H680J	CHIP C	68PF	J	
C69			CK73FB1H391K	CHIP C	390PF	K	
C70			CC73FSL1H151J	CHIP C	150PF	J	
C71			CK73FF1E104Z	CHIP C	0.10UF	Z	
C72,73			CK73FB1H102K	CHIP C	1000PF	K	
C74			CK73FF1E104Z	CHIP C	0.10UF	Z	
C75			CC73FCH1H330J	CHIP C	33PF	J	
C76,77			CC73FSL1H221J	CHIP C	220PF	J	
C78			CK73FF1E104Z	CHIP C	0.10UF	Z	
C79,80			CK73FB1H102K	CHIP C	1000PF	K	
C81			CK73FF1E104Z	CHIP C	0.10UF	Z	
C89			CC73FCH1H020C	CHIP C	2.0PF	C	
C90-92			CK73FF1E104Z	CHIP C	0.10UF	Z	
C93			CK73FB1H103K	CHIP C	0.010UF	K	
C94			CC73FCH1H060D	CHIP C	6.0PF	D	
C95			CC73FCH1H180J	CHIP C	18PF	J	
C96-98			CK73FB1H103K	CHIP C	0.010UF	K	
C99			CC73FCH1H220J	CHIP C	22PF	J	
C100			CC73FCH1H010C	CHIP C	1.0PF	C	
C101			CK73FB1H103K	CHIP C	0.010UF	K	
C102,103			CK73FF1E104Z	CHIP C	0.10UF	Z	
C104			CC73FCH1H680J	CHIP C	68PF	J	
C105			CC73FSL1H151J	CHIP C	150PF	J	
C106			CC73FCH1H680J	CHIP C	68PF	J	
C107			CK73FF1E104Z	CHIP C	0.10UF	Z	
C108			CK73FB1H103K	CHIP C	0.010UF	K	
C109			CC73FCH1H050C	CHIP C	5.0PF	C	
C110			CC73FCH1H010C	CHIP C	1.0PF	C	
C111			CK73FF1E104Z	CHIP C	0.10UF	Z	
C112			CC73FCH1H100D	CHIP C	10PF	D	
C113			CC73FCH1H020C	CHIP C	2.0PF	C	
C114-118			CK73FB1H103K	CHIP C	0.010UF	K	
C119			CC73FCH1H020C	CHIP C	2.0PF	C	
C120			CC73FCH1H150J	CHIP C	15PF	J	
C121			CC73FCH1H100D	CHIP C	10PF	D	
C122			CC73FCH1H030C	CHIP C	3.0PF	C	
C123			CC73FCH1H101J	CHIP C	100PF	J	
C124			CK73FF1E104Z	CHIP C	0.10UF	Z	
C125			CK73FB1H102K	CHIP C	1000PF	K	
C126-134			CK73FB1H103K	CHIP C	0.010UF	K	
C135			CK73FF1E104Z	CHIP C	0.10UF	Z	
C136			CK73FB1H471K	CHIP C	470PF	K	
C137			CC73FCH1H100D	CHIP C	10PF	D	
C138-141			CK73FB1H103K	CHIP C	0.010UF	K	
C142			CC73FCH1H100D	CHIP C	10PF	D	
C143,144			CK73FB1H103K	CHIP C	0.010UF	K	
C145			CC73FCH1H100D	CHIP C	10PF	D	
C146-148			CK73FB1H103K	CHIP C	0.010UF	K	
C149			CC73FCH1H200J	CHIP C	20PF	J	
C150			CK73FB1H103K	CHIP C	0.010UF	K	
C151			CK73FB1H471K	CHIP C	470PF	K	
C152,153			CK73FB1H103K	CHIP C	0.010UF	K	
C154			CC73FCH1H270J	CHIP C	27PF	J	
C155,156			CK73FB1H103K	CHIP C	0.010UF	K	
C157-159			CK73FF1E104Z	CHIP C	0.10UF	Z	
C162			CC73FCH1H100D	CHIP C	10PF	D	
C163			CK73FF1E104Z	CHIP C	0.10UF	Z	
C164			CK73FB1H103K	CHIP C	0.010UF	K	

Ref. No.	Address	New parts	Parts No.	Description			Desti-nation
C165			CK73FF1C474Z	CHIP C	0.47UF	Z	
C166-168			CK73FF1E104Z	CHIP C	0.10UF	Z	
C169			CK73FB1H103K	CHIP C	0.010UF	K	
C170			CK73FB1H471K	CHIP C	470PF	K	
C171-173			CK73FB1H103K	CHIP C	0.010UF	K	
C174			CE04EW1A101M	ELECTRO	100UF	10WV	
C175,176			CK73FB1H103K	CHIP C	0.010UF	K	
C177,178			CE04EW1C100M	ELECTRO	10UF	16WV	
C179			CC73FSL1H121J	CHIP C	120PF	J	
C180			CC73FCH1H390J	CHIP C	39PF	J	
C181			CK73FF1H473Z	CHIP C	0.047UF	Z	
C182			CC73FCH1H100D	CHIP C	10PF	D	
C183			CK73FB1H471K	CHIP C	470PF	K	
C184-191			CK73FB1H103K	CHIP C	0.010UF	K	
C192			CC73FCH1H010C	CHIP C	1.0PF	C	
C193			CC73FCH1H050C	CHIP C	5.0PF	C	
C194			CK73FF1E104Z	CHIP C	0.10UF	Z	
C195			CK73FB1H103K	CHIP C	0.010UF	K	
C196,197			CC73FUJ1H080D	CHIP C	8.0PF	D	
C198			CK73FB1H103K	CHIP C	0.010UF	K	
C199			CC73FCH1H010C	CHIP C	1.0PF	C	
C200			CK73FB1H103K	CHIP C	0.010UF	K	
C201			CC73FCH1H200J	CHIP C	20PF	J	
C202			CC73FUJ1H080D	CHIP C	8.0PF	D	
C203			CC73FCH1H0R5C	CHIP C	0.5PF	C	
C204			CC73FUJ1H080D	CHIP C	8.0PF	D	
C205,206			CK73FB1H103K	CHIP C	0.010UF	K	
C207			CK73FB1E104K	CHIP C	0.10UF	K	
C208-213			CK73FB1H103K	CHIP C	0.010UF	K	
C215,216			CK73FB1H103K	CHIP C	0.010UF	K	
C217			CK73FB1H471K	CHIP C	470PF	K	
C218-220			CK73FB1H103K	CHIP C	0.010UF	K	
C221			CK73FB1H332K	CHIP C	3300PF	K	
C222			CK73FF1E104Z	CHIP C	0.10UF	Z	
C223			CK73FB1E104K	CHIP C	0.10UF	K	
C224			CK73FB1H103K	CHIP C	0.010UF	K	
C225			CK73FF1E104Z	CHIP C	0.10UF	Z	
C226			CK73FB1H103K	CHIP C	0.010UF	K	
C236-239			CK73FF1E104Z	CHIP C	0.10UF	Z	
C240			CE04EW1C100M	ELECTRO	10UF	16WV	
C241-242			CK73FF1E104Z	CHIP C	0.10UF	Z	
C243			CE04EW1C100M	ELECTRO	10UF	16WV	
C244			CK73FF1E104Z	CHIP C	0.10UF	Z	
C245			CC73FCH1H050C	CHIP C	5.0PF	C	
C246,247			CK73FB1H103K	CHIP C	0.010UF	K	
C248			CE04EW1C101M	ELECTRO	100UF	16WV	
C249			CK73FB1H103K	CHIP C	0.010UF	K	
C250			CK73FF1C105Z	CHIP C	1.0UF	Z	
C251,252			CK73FB1H103K	CHIP C	0.010UF	K	
C253			CE04EW1E4R7M	ELECTRO	4.7UF	25WV	
C254			CK73FB1H103K	CHIP C	0.010UF	K	
C255			CK73FF1C105Z	CHIP C	1.0UF	Z	
C256			CK73FB1H103K	CHIP C	0.010UF	K	
C257			CE04EW1C100M	ELECTRO	10UF	16WV	
C258			CE04EW1H4R7M	ELECTRO	4.7UF	50WV	
C259			CE04EW1HR22M	ELECTRO	0.22UF	50WV	
C260			CE04EW1H010M	ELECTRO	1.0UF	50WV	
C261			CE04EW1H4R7M	ELECTRO	4.7UF	50WV	
C265,266			CC73FCH1H101J	CHIP C	100PF	J	
C267			CK73FB1H103K	CHIP C	0.010UF	K	

PARTS LIST

TX-RX UNIT (X57-500X-XX)

Ref. No.	Address	New parts	Parts No.	Description			Destination
C268			CE04EW1C470M	ELECTRO	47UF	16WV	
C269			CC73FCH1H101J	CHIP C	100PF	J	
C270			CK73FB1H222K	CHIP C	2200PF	K	
C271			CK73FB1H332K	CHIP C	3300PF	K	
C272			CE04EW1C470M	ELECTRO	47UF	16WV	
C273			CC73FCH1H101J	CHIP C	100PF	J	
C274,275			CK73FB1H103K	CHIP C	0.010UF	K	
C276			CE04EW1C470M	ELECTRO	47UF	16WV	
C277			CK73FB1H103K	CHIP C	0.010UF	K	
C285			CK73FB1H103K	CHIP C	0.010UF	K	
C286			CK73FB1H222K	CHIP C	2200PF	K	
C287			CK73FB1H103K	CHIP C	0.010UF	K	
C288			CK73FB1H102K	CHIP C	1000PF	K	
C289,290			CK73FB1H103K	CHIP C	0.010UF	K	
C291			CK73FB1H102K	CHIP C	1000PF	K	
C293-295			CK73FB1H103K	CHIP C	0.010UF	K	
C296			CE04EW1C101M	ELECTRO	100UF	16WV	
C297			CK73FB1H103K	CHIP C	0.010UF	K	
C298-302			CK73FB1H102K	CHIP C	1000PF	K	
C303			CK73FB1H122K	CHIP C	1200PF	K	
C304			CE04EW1HR22M	ELECTRO	0.22UF	50WV	
C305			CK73FF1E104Z	CHIP C	0.10UF	Z	
C307			CC73FCH1H101J	CHIP C	100PF	J	
C308,309			CK73FB1H103K	CHIP C	0.010UF	K	
C310			CC73FCH1H470J	CHIP C	47PF	J	
C311			CC73FCH1H360J	CHIP C	36PF	J	
C312			CK73FB1H103K	CHIP C	0.010UF	K	
C313			CE04EW1E4R7M	ELECTRO	4.7UF	25WV	
C314			CK73FB1H102K	CHIP C	1000PF	K	
C315			CK73FB1H103K	CHIP C	0.010UF	K	
C316			CK73FF1E104Z	CHIP C	0.10UF	Z	
C335,336			CK73FF1C105Z	CHIP C	1.0UF	Z	
C342			CK73FB1E104K	CHIP C	0.10UF	K	
C345,346			CK73FB1H103K	CHIP C	0.010UF	K	
C349			CK73FB1H102K	CHIP C	1000PF	K	
C350,351			CK73FB1H103K	CHIP C	0.010UF	K	
C352			CE04EW1C470M	ELECTRO	47UF	16WV	
C353			CK73FF1E104Z	CHIP C	0.10UF	Z	
C354			CK73FB1H103K	CHIP C	0.010UF	K	
C355			CE04EW1C101M	ELECTRO	100UF	16WV	
C356			CE04EW1C470M	ELECTRO	47UF	16WV	
C357			CK73FB1H103K	CHIP C	0.010UF	K	
C358			CE04EW1E4R7M	ELECTRO	4.7UF	25WV	
C359			CE04EW1C471M	ELECTRO	470UF	16WV	
C360,361			CK73FB1H103K	CHIP C	0.010UF	K	
C362			CK73FB1H102K	CHIP C	1000PF	K	
C364			CK73FF1E104Z	CHIP C	0.10UF	Z	
C365			CE04EW1C100M	ELECTRO	10UF	16WV	
C366			CE04EW1C220M	ELECTRO	22UF	16WV	
C367			CK73FF1E104Z	CHIP C	0.10UF	Z	
C369			CE04EW1C331M	ELECTRO	330UF	16WV	
C370			C92-0005-05	CHIP-TAN	2.2UF	6.3WV	
C371			CC73FCH1H101J	CHIP C	100PF	J	
C372			CK73FF1E104Z	CHIP C	0.10UF	Z	
C377-379			CK73FB1H102K	CHIP C	1000PF	K	
C380			CK73FF1E104Z	CHIP C	0.10UF	Z	
C381,382			CK73FB1H102K	CHIP C	1000PF	K	
C383,384			CK73FB1E104K	CHIP C	0.10UF	K	
C385			CK73FF1E104Z	CHIP C	0.10UF	Z	
C386-389			CK73FB1H102K	CHIP C	1000PF	K	

Ref. No.	Address	New parts	Parts No.	Description			Destination
C390			CK73EB1H104K	CHIP C	0.10UF	K	
C391-394			CK73FB1H102K	CHIP C	1000PF	K	
C397			C92-0003-05	CHIP-TAN	0.47UF	25WV	
C398			CK73FF1E104Z	CHIP C	0.10UF	Z	
C399			CC73FCH1H470J	CHIP C	47PF	J	
C400			CK73FB1H103K	CHIP C	0.010UF	K	
C407			C92-0004-05	CHIP-TAN	1.0UF	16WV	
C408			CK73FB1H103K	CHIP C	0.010UF	K	
C409			CC73FCH1H100D	CHIP C	10PF	D	
C410			CC73FCH1H020C	CHIP C	2.0PF	C	
C411			CC73FCH1H060D	CHIP C	6.0PF	D	
C412			CK73FB1E104K	CHIP C	0.10UF	K	
C413,414			CK73FB1H103K	CHIP C	0.010UF	K	
C415,416			CC73FCH1H100D	CHIP C	10PF	D	
C417			CE04EW1C330M	ELECTRO	33UF	16WV	
C418			CK73FF1C105Z	CHIP C	1.0UF	Z	
C419			CE04NW1H2R2M	ELECTRO	2.2UF	50WV	
C420,421			CE04EW1C220M	ELECTRO	22UF	16WV	
C422,423			CK73FB1H333K	CHIP C	0.033UF	K	
C424			CK73FB1E104K	CHIP C	0.10UF	K	
C425-430			CC73FSL1H471J	CHIP C	470PF	J	
C431			C92-0004-05	CHIP-TAN	1.0UF	16WV	
C450-455			CK73FB1H102K	CHIP C	1000PF	K	
C459			CC73FCH1H040C	CHIP C	4.0PF	C	
C460,461			CC73FCH1H220J	CHIP C	22PF	J	
C500			CK73FB1H103K	CHIP C	0.010UF	K	
C501			CC73FCH1H390J	CHIP C	39PF	J	
C502			CK73FB1H103K	CHIP C	0.010UF	K	
C503			CE04EW1C100M	ELECTRO	10UF	16WV	
C504			CC73FSL1H151J	CHIP C	150PF	J	
C505			CC73FCH1H390J	CHIP C	39PF	J	
C506			CC73FCH1H100D	CHIP C	10PF	D	
C507			CK73FB1H103K	CHIP C	0.010UF	K	
C508			CC73FCH1H050C	CHIP C	5.0PF	C	
C509,510			CK73FB1H103K	CHIP C	0.010UF	K	
C511			CK73FB1H102K	CHIP C	1000PF	K	
C512,513			CK73FB1H103K	CHIP C	0.010UF	K	
C514			CK73FB1H102K	CHIP C	1000PF	K	
C515			CK73FB1H103K	CHIP C	0.010UF	K	
C516			C92-0536-05	CHIP-TAN	10UF	10WV	
C517			CK73FB1H103K	CHIP C	0.010UF	K	
C518,519			CC73FCH1H150J	CHIP C	15PF	J	
C520			CK73FB1H103K	CHIP C	0.010UF	K	
C521			CE04EW1A221M	ELECTRO	220UF	10WV	
C522			CK73FB1H103K	CHIP C	0.010UF	K	
C523			CK73FB1H333K	CHIP C	0.033UF	K	
C524,525			C92-0004-05	CHIP-TAN	1.0UF	16WV	
C526			CE04EW1A101M	ELECTRO	100UF	10WV	
C527			CK73FB1H103K	CHIP C	0.010UF	K	
C529			CK73FB1H103K	CHIP C	0.010UF	K	
C530			C92-0003-05	CHIP-TAN	0.47UF	25WV	
C531			CE04EW1A221M	ELECTRO	220UF	10WV	
C532-534			CK73FB1H102K	CHIP C	1000PF	K	
C535			CC73FCH1H101J	CHIP C	100PF	J	
C536,537			CC73FCH1H070D	CHIP C	7.0PF	D	
C538			CC73FCH1H070D	CHIP C	7.0PF	D	
C539			CK73FB1H102K	CHIP C	1000PF	K	
C540			CC73FCH1H120J	CHIP C	12PF	J	
C541			CC73FCH1H180J	CHIP C	18PF	J	
C542			CK73FB1H102K	CHIP C	1000PF	K	

TS-570D

PARTS LSIT

TX-RX UNIT (X57-500X-XX)

Ref. No.	Address	New parts	Parts No.	Description			Desti-nation
C543			CC73FCH1H010C	CHIP C	1.0PF	C	
C544-548			CK73FB1H102K	CHIP C	1000PF	K	
C549			CC73FCH1H330J	CHIP C	33PF	J	
C550			CC73FCH1H080D	CHIP C	8.0PF	D	
C551			CC73FCH1H680J	CHIP C	68PF	J	
C552			CK73FF1C105Z	CHIP C	1.0UF	Z	
C553,554			CK73FB1H103K	CHIP C	0.010UF	K	
C555,556			CC73FCH1H270J	CHIP C	27PF	J	
C557			CC73FCH1H470J	CHIP C	47PF	J	
C558			CC73FCH1H270J	CHIP C	27PF	J	
C559			CK73FB1H103K	CHIP C	0.010UF	K	
C560,561			CC73FCH1H270J	CHIP C	27PF	J	
C562,563			CK73FB1H103K	CHIP C	0.010UF	K	
C564,565			CC73FCH1H270J	CHIP C	27PF	J	
C566-568			CK73FB1H103K	CHIP C	0.010UF	K	
C569			C92-0007-05	CHIP-TAN	2.2UF	20WV	
C570			CK73FB1H102K	CHIP C	1000PF	K	
C571			CC73FSL1H181J	CHIP C	180PF	J	
C572			CC73FCH1H100D	CHIP C	10PF	D	
C573			CC73FSL1H221J	CHIP C	220PF	J	
C574			CC73FCH1H220J	CHIP C	22PF	J	
C575			CC73FSL1H151J	CHIP C	150PF	J	
C576,577			CK73FB1H103K	CHIP C	0.010UF	K	
C578			CK73FF1E104Z	CHIP C	0.10UF	Z	
C579			CK73FB1H103K	CHIP C	0.010UF	K	
C580			C92-0516-05	CHIP-TAN	4.7UF	16WV	
C581-585			CK73FB1H103K	CHIP C	0.010UF	K	
C586			CK73FB1H471K	CHIP C	470PF	K	
C587			CC73FCH1H220J	CHIP C	22PF	J	
C588			CK73FB1H471K	CHIP C	470PF	K	
C589			CK73FB1H103K	CHIP C	0.010UF	K	
C590,591			CC73FCH1H270J	CHIP C	27PF	J	
C592-594			CK73FB1H103K	CHIP C	0.010UF	K	
C595			C92-0007-05	CHIP-TAN	2.2UF	20WV	
C596			CK73FB1H102K	CHIP C	1000PF	K	
C597			CC73FSL1H181J	CHIP C	180PF	J	
C598			CC73FCH1H100D	CHIP C	10PF	D	
C599			CC73FSL1H221J	CHIP C	220PF	J	
C600			CC73FCH1H220J	CHIP C	22PF	J	
C601			CC73FSL1H151J	CHIP C	150PF	J	
C602			CK73FF1E104Z	CHIP C	0.10UF	Z	
C603,604			CK73FB1H103K	CHIP C	0.010UF	K	
C605			CC73FCH1H101J	CHIP C	100PF	J	
C606			CC73FCH1H330J	CHIP C	33PF	J	
C607			CC73FCH1H470J	CHIP C	47PF	J	
C608			CC73FSL1H151J	CHIP C	150PF	J	
C609			CC73FCH1H560J	CHIP C	56PF	J	
C610			CC73FCH1H101J	CHIP C	100PF	J	
C611			CC73FCH1H270J	CHIP C	27PF	J	
C612			CC73FSL1H121J	CHIP C	120PF	J	
C613			CC73FCH1H820J	CHIP C	82PF	J	
C614			CC73FCH1H680J	CHIP C	68PF	J	
C614-617			CK73FB1H103K	CHIP C	0.010UF	K	
C618			CK73FF1E104Z	CHIP C	0.10UF	Z	
C619-621			CK73FB1H103K	CHIP C	0.010UF	K	
C622			CC73FCH1H0R5C	CHIP C	0.5PF	C	
C623			CC73FCH1H060D	CHIP C	6 0PF	D	
C624			CC73FCH1H080D	CHIP C	8.0PF	D	
C625,626			CK73FB1H102K	CHIP C	1000PF	K	
C627			CK73FB1H103K	CHIP C	0.010UF	K	

Ref. No.	Address	New parts	Parts No.	Description			Desti-nation
C628			CK73FB1H102K	CHIP C	1000PF	K	
C629			CK73FB1H103K	CHIP C	0.010UF	K	
C630			CC73FCH1H101J	CHIP C	100PF	J	
C631			CC73FCH1H050C	CHIP C	5.0PF	C	
C632			CC73FCH1H0R5C	CHIP C	0.5PF	C	
C633			CC73FCH1H100D	CHIP C	10PF	D	
C634			CC73FCH1H0R5C	CHIP C	0.5PF	C	
C635			CC73FCH1H050C	CHIP C	5.0PF	C	
C637-641			CK73FB1H103K	CHIP C	0.010UF	K	
C642			CC73FCH1H101J	CHIP C	100PF	J	
C643			CC73FSL1H471J	CHIP C	470PF	J	
C644			CK73FB1H103K	CHIP C	0.010UF	K	
C645			CC73FCH1H101J	CHIP C	100PF	J	
C646,647			CK73FB1H103K	CHIP C	0.010UF	K	
C648			CC73FCH1H020C	CHIP C	2.0PF	C	
C649			CC73FCH1H030C	CHIP C	3.0PF	C	
C650			CC73FCH1H020C	CHIP C	2.0PF	C	
C651			CC73FCH1H1R5C	CHIP C	1.5PF	C	
C652,653			CC73FCH1H270J	CHIP C	27PF	J	
C654			CK73FB1H103K	CHIP C	0.010UF	K	
C655			CE04EW1A221M	ELECTRO	220UF	10WV	
C656			CK73FB1H103K	CHIP C	0.010UF	K	
C657			CE04EW1C470M	ELECTRO	47UF	16WV	
C658			CK73FB1H103K	CHIP C	0.010UF	K	
C659,660			C92-0004-05	CHIP-TAN	1 0UF	16WV	
C661			CK73FB1H103K	CHIP C	0.010UF	K	
C662			CE04EW1C471M	ELECTRO	470UF	16WV	
C663			CE04EW1A221M	ELECTRO	220UF	10WV	
C664			CK73FB1H103K	CHIP C	0.010UF	K	
C665			CC73FCH1H470J	CHIP C	47PF	J	
C666			CC73FCH1H100D	CHIP C	10PF	D	
C667,668			CK73FB1H102K	CHIP C	1000PF	K	
C669-671			CC73FCH1H120J	CHIP C	12PF	J	
C672,673			CK73FB1H102K	CHIP C	1000PF	K	
C674			CC73FCH1H050C	CHIP C	5.0PF	C	
C675			CC73FCH1H270J	CHIP C	27PF	J	
C677			CC73FCH1H100D	CHIP C	10PF	D	
C678,679			CK73FB1H102K	CHIP C	1000PF	K	
C680,681			CC73FCH1H160J	CHIP C	16PF	J	
C682			CC73FCH1H120J	CHIP C	12PF	J	
C683,684			CK73FB1H102K	CHIP C	1000PF	K	
C685			CC73FCH1H050C	CHIP C	5.0PF	C	
C686			CC73FCH1H240J	CHIP C	24PF	J	
C687			CK73FB1H102K	CHIP C	1000PF	K	
C688			CC73FCH1H100D	CHIP C	10PF	D	
C689			C92-0001-05	CHIP C	0.1UF	35WV	
C690			CK73FB1H102K	CHIP C	1000PF	K	
C691,692			CC73FCH1H080D	CHIP C	8.0PF	D	
C693			CC73FCH1H120J	CHIP C	12PF	J	
C694,695			CK73FB1H102K	CHIP C	1000PF	K	
C696			CC73FCH1H100D	CHIP C	10PF	D	
C697			CK73FB1H103K	CHIP C	0.010UF	K	
C698-701			CK73FB1H102K	CHIP C	1000PF	K	
C702			CK73FB1H103K	CHIP C	0.010UF	K	
C703			CC73FCH1H150J	CHIP C	15PF	J	
C704			CC73FCH1H100D	CHIP C	10PF	D	
C705			CC73FCH1H150J	CHIP C	15PF	J	
C706,707			CC73FCH1H010C	CHIP C	1 0PF	C	
C708,709			CC73FCH1H070D	CHIP C	7.0PF	D	
C710			CC73FCH1H010C	CHIP C	1.0PF	C	

PARTS LIST

TX-RX UNIT (X57-500X-XX)

Ref. No.	Address	New parts	Parts No.	Description	Destination
C711-714			CK73FB1H102K	CHIP C 1000PF K	
C715			CK73FB1H103K	CHIP C 0.010UF K	
C716			CC73FSL1H221J	CHIP C 220PF J	
C718-722			CC73FSL1H221J	CHIP C 220PF J	
C724			CC73FSL1H221J	CHIP C 220PF J	
C725			CK73FB1H103K	CHIP C 0.010UF K	
C755			CC73FCH1H030C	CHIP C 3.0PF C	
C756			CE04EW1A101M	ELECTRO 100UF 10WV	
C758			CK73FB1H102K	CHIP C 1000PF K	
C759			CK73FF1C105Z	CHIP C 1 0UF Z	
C760,761			CC73FCH1H0R5C	CHIP C 0.5PF C	
C762			CK73FB1H102K	CHIP C 1000PF K	
C763			CK73FB1H103K	CHIP C 0 010UF K	
C764			CK73FB1H102K	CHIP C 1000PF K	
C766-768			CK73FB1H102K	CHIP C 1000PF K	
C769-772			CC73FSL1H221J	CHIP C 220PF J	
C773			CK73FB1H103K	CHIP C 0.010UF K	
C774			CC73FCH1H050C	CHIP C 5 0PF C	
C775			CC73FCH1H330J	CHIP C 33PF J	
C776			CC73FCH1H680J	CHIP C 68PF J	
C777			CC73ECH1H202J	CHIP C 2000PF J	
C778-785			CC73FCH1H470J	CHIP C 47PF J	
C786			CC73FCH1H150J	CHIP C 15PF J	
C787,788			CK73FB1E104K	CHIP C 0.10UF K	
C800			CK73FB1H103K	CHIP C 0.010UF K	
C801			CC73FCH1H070D	CHIP C 7.0PF D	
C802,803			CK73FB1H103K	CHIP C 0.010UF K	
C804			C92-0003-05	CHIP-TAN 0.47UF 25WV	
C805-807			CK73FB1H103K	CHIP C 0.010UF K	
C808			C92-0003-05	CHIP-TAN 0.47UF 25WV	
C809			CK73FB1H103K	CHIP C 0.010UF K	
C810			CK73FB1H102K	CHIP C 1000PF K	
C811			CC73FCH1H100D	CHIP C 10PF D	
C812			CK73FB1H103K	CHIP C 0.010UF K	
C813-815			CK73FB1H103K	CHIP C 0.010UF K	
C816			C92-0004-05	CHIP-TAN 1.0UF 16WV	
C817			CE04EW1A101M	ELECTRO 100UF 10WV	
C818,819			CC73FCH1H470J	CHIP C 47PF J	
C900-903			CK73EF1C105Z	CHIP C 1.0UF Z	
C904			CK73FB1H103K	CHIP C 0.010UF K	
C905			CE04NW1C470M	ELECTRO 47UF 16WV	
C906-913			CK73FB1H102K	CHIP C 1000PF K	
TC1,2			C05-0344-05	TRIMMER CAPACITOR (30PF)	E,E2,E3
TC500			C05-0344-05	TRIMMER CAPACITOR (30PF)	
TC502-504			C05-0345-05	TRIMMER CAPACITOR (10PF)	
-			E18-0254-05	SOCKET	
CN1,2			E04-0154-05	RF COAXIAL CABLE RECEPTACLE	
CN3,4			E40-0211-05	PIN CONNECTOR FOR INSIDE (2P)	
CN5			E04-0154-05	RF COAXIAL CABLE RECEPTACLE	
CN7			E04-0154-05	RF COAXIAL CABLE RECEPTACLE	
CN8,9			E40-5059-05	PIN CONNECTOR FOR INSIDE (5P)	
CN10			E04-0154-05	RF COAXIAL CABLE RECEPTACLE	
CN11			E40-5764-05	PIN CONNECTOR FOR INSIDE (16P)	
CN12			E40-3238-05	PIN CONNECTOR FOR INSIDE (3P)	
CN14			E40-3238-05	PIN CONNECTOR FOR INSIDE (3P)	
CN15			E40-5764-05	PIN CONNECTOR FOR INSIDE (16P)	
CN16			E40-5765-05	PIN CONNECTOR FOR INSIDE (8P)	
CN17			E40-5747-05	PIN ASSY SOCKET (11P)	
CN18			E40-5797-05	PIN CONNECTOR FOR INSIDE (26P)	
CN19,20			E40-5487-05	PIN CONNECTOR FOR INSIDE (2P)	

Ref. No.	Address	New parts	Parts No.	Description	Destination
CN21			E40-3237-05	PIN CONNECTOR FOR INSIDE (2P)	
CN500			E40-5764-05	PIN CONNECTOR FOR INSIDE (16P)	
CN501			E04-0154-05	RF COAXIAL CABLE RECEPTACLE	
CN502			E40-3237-05	PIN CONNECTOR FOR INSIDE (2P)	
CN503			E04-0154-05	RF COAXIAL CABLE RECEPTACLE	
J1			E06-0752-05	DIN SOCKET (7P)	
J2		*	E56-0408-05	DIN SOCKET (13P)	
J3			E11-0414-05	PHONE JACK (3.5D)	
J4			E11-0455-05	PHONE JACK (3.5D)	
J5			E11-0438-05	PHONE JACK	
J900		*	E58-0435-05	SUB SOCKET	
W1		*	E37-0651-05	LEAD WIRE WITH CONNECTOR (NB)	
W2		*	E37-0649-05	LEAD WIRE WITH PLUG (LO2)	
W3		*	E37-0650-05	LEAD WIRE WITH PLUG (LOI)	
W4		*	E37-0652-15	LEAD WIRE WITH CONNECTOR (CAR)	
W5		*	E37-0653-05	LEAD WIRE WITH CONNECTOR (FMM)	
W6		*	E37-0654-05	LEAD WIRE WITH CONNECTOR (AF)	
W450		*	E37-0655-05	LEAD WIRE WITH CONNECTOR (VOL)	
A500,501			F10-2062-04	SHIELDING CASE (DDS1)	
A502			F10-2092-04	SHIELDING CASE (VCO2)	
A503			F11-1086-14	SHIELDING COVER (VCO2)	
A505		*	F10-2209-04	SHIELDING CASE (VCO1)	
A506		*	F10-2208-04	SHIELDING COVER (VCO1)	
F1	1C		F53-0055-05	FUSE (0.8A)	
A504		*	G13-1549-04	CUSHION (VCO2)	
A507		*	G13-1550-04	CUSHION (VCO1)	
-			J30-0545-05	SPACER (XF1)	
-			J30-0564-05	SPACER (XF2)	
-			J32-0761-04	BOSS	
CD1			L79-1013-05	TUNING COIL (455KHZ)	
CF1			L72-0372-05	CERAMIC FILTER (455KHZ)	
CF500,501			L72-0351-05	CERAMIC FILTER (8.830MHZ)	
L1			L40-2215-48	SMALL FIXED INDUCTOR (220UH)	
L2		*	L40-6891-15	SMALL FIXED INDUCTOR	E,E2,E3
L3		*	L40-3991-15	SMALL FIXED INDUCTOR	E,E2,E3
L4			L40-2785-48	SMALL FIXED INDUCTOR (270NH)	
L5			L33-0695-05	CHOKE COIL (1MH)	
L6			L40-4795-48	SMALL FIXED INDUCTOR (4.7UH)	
L7,8			L33-0695-05	CHOKE COIL (1MH)	
L9-11			L40-6891-14	SMALL FIXED INDUCTOR	
L12,13			L40-1892-14	SMALL FIXED INDUCTOR	
L14			L40-5691-14	SMALL FIXED INDUCTOR	
L15,16			L40-1292-14	SMALL FIXED INDUCTOR	
L17			L40-3391-14	SMALL FIXED INDUCTOR	
L18,19			L40-1092-14	SMALL FIXED INDUCTOR	
L20-22			L34-4262-05	COIL	
L23			L40-2792-14	SMALL FIXED INDUCTOR	
L24,25			L40-3382-14	SMALL FIXED INDUCTOR	
L26			L40-2292-14	SMALL FIXED INDUCTOR	
L27,28			L40-2282-14	SMALL FIXED INDUCTOR	
L29-31			L34-4289-05	COIL	
L32			L40-1292-14	SMALL FIXED INDUCTOR	
L33,34			L40-2282-14	SMALL FIXED INDUCTOR	
L35			L40-1292-14	SMALL FIXED INDUCTOR	
L36,37			L40-2282-14	SMALL FIXED INDUCTOR	
L41			L40-1015-48	SMALL FIXED INDUCTOR (100UH)	
L42,43			L40-2785-48	SMALL FIXED INDUCTOR (270NH)	
L44			L19-0324-05	TROIDAL COIL	

PARTS LSIT

TX-RX UNIT (X57-500X-XX)

Ref. No.	Address	New parts	Parts No.	Description	Destination
L45			L34-4413-05	COIL	
L46-48			L40-1015-48	SMALL FIXED INDUCTOR (100UH)	
L49			L40-1085-48	SMALL FIXED INDUCTOR (100NH)	
L50,51			L34-4408-05	COIL	
L52			L33-0695-05	CHOKE COIL (1MH)	
L53			L40-1015-48	SMALL FIXED INDUCTOR (100UH)	
L54			L34-4415-05	COIL	
L55			L34-0943-05	COIL	
L56		*	L34-4467-05	COIL	
L57			L39-1255-05	TROIDAL COIL	
L58			L40-5695-48	SMALL FIXED INDUCTOR (5.6UH)	
L59			L40-4705-48	SMALL FIXED INDUCTOR (47UH)	
L60			L40-1015-48	SMALL FIXED INDUCTOR (100UH)	
L61		*	L34-4465-05	COIL	
L62			L40-1005-48	SMALL FIXED INDUCTOR (10UH)	
L63			L40-3395-48	SMALL FIXED INDUCTOR (3.3UH)	
L64			L19-0324-05	TROIDAL COIL	
L65			L39-1255-05	TROIDAL COIL	
L66			L19-0324-05	TROIDAL COIL	
L67			L34-4264-05	COIL	
L68			L34-4265-05	COIL	
L69			L34-0943-05	COIL	
L70		*	L34-4469-05	COIL	
L71		*	L34-4465-05	COIL	
L72			L34-4333-05	COIL	
L73			L39-1255-05	TROIDAL COIL	
L74-76			L34-4333-05	COIL	
L77			L19-0324-05	TROIDAL COIL	
L78-81			L40-1015-48	SMALL FIXED INDUCTOR (100UH)	
L85			L40-1005-48	SMALL FIXED INDUCTOR (10UH)	
L86			L19-0324-05	TROIDAL COIL	
L87			L40-1015-48	SMALL FIXED INDUCTOR (100UH)	
L88			L40-1021-13	SMALL FIXED INDUCTOR	
L89			L33-0695-05	CHOKE COIL (1MH)	
L90			L40-1015-48	SMALL FIXED INDUCTOR (100UH)	
L91			L40-1005-48	SMALL FIXED INDUCTOR ((10UH)	
L92			L40-1015-48	SMALL FIXED INDUCTOR (100UH)	
L97-100			L40-1015-48	SMALL FIXED INDUCTOR (100UH)	
L101			L40-1095-48	SMALL FIXED INDUCTOR (1UH)	
L105,106			L33-0695-05	CHOKE COIL (1MH)	
L107			L40-1001-12	SMALL FIXED INDUCTOR	
L108			L40-1015-48	SMALL FIXED INDUCTOR (100UH)	
L109			L40-1011-15	SMALL FIXED INDUCTOR	
L110			L40-2285-48	SMALL FIXED INDUCTOR (220NH)	
L111			L34-4408-05	COIL	
L112			L40-1095-48	SMALL FIXED INDUCTOR (1UH)	
L500			L40-1015-48	SMALL FIXED INDUCTOR (100UH)	
L501			L40-1005-48	SMALL FIXED INDUCTOR (10UH)	
L502			L40-4795-48	SMALL FIXED INDUCTOR (4.7UH)	
L503,504			L40-1015-48	SMALL FIXED INDUCTOR (100UH)	
L505			L40-4705-48	SMALL FIXED INDUCTOR	
L506			L40-1015-48	SMALL FIXED INDUCTOR (100UH)	
L507			L34-4424-05	COIL	
L508			L34-2353-05	COIL	
L509			L40-2285-48	SMALL FIXED INDUCTOR (220NH)	
L510,511			L40-1015-48	SMALL FIXED INDUCTOR (100UH)	
L512,513			L40-1005-48	SMALL FIXED INDUCTOR (10UH)	
L514-516			L40-1015-48	SMALL FIXED INDUCTOR (100UH)	
L517,518			L40-2205-48	SMALL FIXED INDUCTOR (22UH)	
L519			L40-1005-48	SMALL FIXED INDUCTOR (10UH)	

Ref. No.	Address	New parts	Parts No.	Description	Destination
L520			L40-1095-48	SMALL FIXED INDUCTOR (1UH)	
L521			L40-1005-48	SMALL FIXED INDUCTOR (10UH)	
L522			L40-1015-48	SMALL FIXED INDUCTOR (100UH)	
L523,524			L40-2205-48	SMALL FIXED INDUCTOR (2.2UH)	
L525		*	L40-3305-48	SMALL FIXED INDUCTOR (33UH)	
L526,527			L40-1005-48	SMALL FIXED INDUCTOR (10UH)	
L528			L40-5695-48	SMALL FIXED INDUCTOR (5.6UH)	
L529,530			L34-4408-05	COIL	
L531			L40-1015-48	SMALL FIXED INDUCTOR (100UH)	
L532			L40-1005-48	SMALL FIXED INDUCTOR (10UH)	
L533			L34-4408-05	COIL	
L534			L34-4399-05	COIL	
L535			L34-4408-05	COIL	
L536			L40-3395-48	SMALL FIXED INDUCTOR (3.3UH)	
L537			L40-1595-48	SMALL FIXED INDUCTOR (1.5UH)	
L538			L40-2295-48	SMALL FIXED INDUCTOR (2.2UH)	
L539			L40-1005-48	SMALL FIXED INDUCTOR (10UH)	
L540			L40-1015-48	SMALL FIXED INDUCTOR (100UH)	
L542			L34-4424-05	COIL	
L543			L34-2360-05	COIL	
L544			L34-4424-05	COIL	
L545			L34-2359-05	COIL	
L546			L34-4424-05	COIL	
L547			L34-2358-05	COIL	
L548,549			L40-6885-48	SMALL FIXED INDUCTOR (680NH)	
L550			L40-3385-48	SMALL FIXED INDUCTOR (330NH)	
L551			L40-1085-48	SMALL FIXED INDUCTOR (100NH)	
L561			L40-4705-48	SMALL FIXED INDUCTOR (47UH)	
L563			L40-2285-48	SMALL FIXED INDUCTOR (220NH)	
L564			L40-1011-12	SMALL FIXED INDUCTOR	
L800			L40-8285-48	SMALL FIXED INDUCTOR (820NH)	
L801			L40-4705-48	SMALL FIXED INDUCTOR (47UH)	
L802		*	L34-4466-05	COIL	
L803		*	L34-4483-05	COIL	
L804			L33-0695-05	CHOKE COIL (1MH)	
L900			L40-4705-48	SMALL FIXED INDUCTOR (47UH)	
L901-904			L40-1015-48	SMALL FIXED INDUCTOR (100UH)	
X1			L77-1302-15	CRYSTAL RESONATOR (8.375MHZ)	
X500			L77-1521-15	CRYSTAL RESONATOR (20.0MHZ)	
XF1			L71-0401-05	MCF (73.05MHZ)	
XF2			L71-0266-05	MCF (8.83MHZ)	
XF3			L71-0208-15	CRYSTAL FILTER (8.83MHZ)	
-			N30-2604-46	PAN HEAD MACHIN SCREW	
-			N30-3008-46	PAN HEAD MACHIN SCREW	
-			N87-2606-46	PAN HEAD MACHIN SCREW	
CP500-503			R90-0721-05	MULTI-COMP 4.7K X 16	
R1			RK73EB2B560J	CHIP R 56 J 1/8W	
R2			RK73EB2B471J	CHIP R 470 J 1/8W	
R3			RK73FB2A472J	CHIP R 4.7K J 1/10W	
R4			RK73FB2A101J	CHIP R 100 J 1/10W	
R5			RK73FB2A222J	CHIP R 2.2K J 1/10W	
R6			RK73FB2A472J	CHIP R 4.7K J 1/10W	
R7			RK73FB2A181J	CHIP R 180 J 1/10W	
R8			RK73FB2A471J	CHIP R 470 J 1/10W	
R9			RK73FB2A560J	CHIP R 56 J 1/10W	
R11			RK73EB2B121J	CHIP R 120 J 1/8W	
R12			RK73FB2A330J	CHIP R 33 J 1/10W	
R13			RK73EB2B121J	CHIP R 120 J 1/8W	
R14			RK73FB2A330J	CHIP R 33 J 1/10W	

PARTS LIST

TX-RX UNIT (X57-500X-XX)

Ref. No.	Address	New parts	Parts No.	Description				Destination
R15			RK73EB2B121J	CHIP R	120	J	1/8W	
R16			RK73FB2A330J	CHIP R	33	J	1/10W	
R17			RK73EB2B121J	CHIP R	120	J	1/8W	
R18			RK73FB2A330J	CHIP R	33	J	1/10W	
R19			RK73EB2B121J	CHIP R	120	J	1/8W	
R20			RK73FB2A330J	CHIP R	33	J	1/10W	
R21			RK73EB2B121J	CHIP R	120	J	1/8W	
R22			RK73FB2A330J	CHIP R	33	J	1/10W	
R23			RK73EB2B121J	CHIP R	120	J	1/8W	
R24			RK73FB2A330J	CHIP R	33	J	1/10W	
R25			RK73EB2B121J	CHIP R	120	J	1/8W	
R26			RK73FB2A330J	CHIP R	33	J	1/10W	
R27			RK73EB2B121J	CHIP R	120	J	1/8W	
R28			RK73FB2A330J	CHIP R	33	J	1/10W	
R29			RK73EB2B121J	CHIP R	120	J	1/8W	
R32			RK73FB2A472J	CHIP R	4.7K	J	1/10W	
R33			RK73FB2A100J	CHIP R	10	J	1/10W	
R34			RK73FB2A681J	CHIP R	680	J	1/10W	
R35			RK73FB2A562J	CHIP R	5.6K	J	1/10W	
R36,37			RK73FB2A100J	CHIP R	10	J	1/10W	
R38,39			RK73FB2A122J	CHIP R	1.2K	J	1/10W	
R40			RK73FB2A101J	CHIP R	100	J	1/10W	
R41			RK73FB2A122J	CHIP R	1.2K	J	1/10W	
R42			RK73FB2A474J	CHIP R	470K	J	1/10W	
R43			RK73FB2A101J	CHIP R	100	J	1/10W	
R44			RK73FB2A223J	CHIP R	22K	J	1/10W	
R45,46			RK73FB2A101J	CHIP R	100	J	1/10W	
R47,48			RK73FB2A100J	CHIP R	10	J	1/10W	
R49			RK73FB2A471J	CHIP R	470	J	1/10W	
R50			RK73FB2A122J	CHIP R	1.2K	J	1/10W	
R52			RK73FB2A681J	CHIP R	680	J	1/10W	
R54			R92-0670-05	CHIP R	0 OHM			
R55			RK73FB2A821J	CHIP R	820	J	1/10W	
R56			R92-0670-05	CHIP R	0 OHM			
R57-59			RK73FB2A222J	CHIP R	2.2K	J	1/10W	
R60,61			RK73FB2A682J	CHIP R	6.8K	J	1/10W	
R62			RK73FB2A151J	CHIP R	150	J	1/10W	
R63			RK73FB2A103J	CHIP R	10K	J	1/10W	
R64			RK73FB2A471J	CHIP R	470	J	1/10W	
R65			RK73FB2A101J	CHIP R	100	J	1/10W	
R66			RK73FB2A222J	CHIP R	2.2K	J	1/10W	
R67			RK73FB2A333J	CHIP R	33K	J	1/10W	
R68			RK73FB2A104J	CHIP R	100K	J	1/10W	
R69			RK73FB2A271J	CHIP R	270	J	1/10W	
R70			RK73FB2A104J	CHIP R	100K	J	1/10W	
R71			RK73FB2A332J	CHIP R	3.3K	J	1/10W	
R72			RK73FB2A472J	CHIP R	4.7K	J	1/10W	
R73			R92-0670-05	CHIP R	0 OHM			
R74			RK73FB2A102J	CHIP R	1.0K	J	1/10W	
R75			RK73FB2A471J	CHIP R	470	J	1/10W	
R76			RK73FB2A101J	CHIP R	100	J	1/10W	
R77			RK73FB2A151J	CHIP R	150	J	1/10W	
R78			RK73FB2A101J	CHIP R	100	J	1/10W	
R79			RK73FB2A823J	CHIP R	82K	J	1/10W	
R80			RK73FB2A472J	CHIP R	4.7K	J	1/10W	
R81,82			RK73FB2A102J	CHIP R	1.0K	J	1/10W	
R83			RK73FB2A273J	CHIP R	27K	J	1/10W	
R84			RK73FB2A102J	CHIP R	1.0K	J	1/10W	
R85			RK73FB2A103J	CHIP R	10K	J	1/10W	
R86,87			RK73FB2A101J	CHIP R	100	J	1/10W	

Ref. No.	Address	New parts	Parts No.	Description				Destination
R88			RK73FB2A331J	CHIP R	330	J	1/10W	
R89			RK73FB2A270J	CHIP R	27	J	1/10W	
R90			RK73FB2A220J	CHIP R	22	J	1/10W	
R91			RK73FB2A103J	CHIP R	10K	J	1/10W	
R92			RK73FB2A102J	CHIP R	1.0K	J	1/10W	
R93			RK73FB2A152J	CHIP R	1.5K	J	1/10W	
R94			RK73FB2A220J	CHIP R	22	J	1/10W	
R95			RK73FB2A102J	CHIP R	1.0K	J	1/10W	
R96			RK73FB2A471J	CHIP R	470	J	1/10W	
R97			R92-0670-05	CHIP R	0 OHM			
R98			RK73FB2A102J	CHIP R	1.0K	J	1/10W	
R99			RK73FB2A221J	CHIP R	220	J	1/10W	
R100			RK73FB2A100J	CHIP R	10	J	1/10W	
R101			RK73FB2A562J	CHIP R	5.6K	J	1/10W	
R102			RK73FB2A223J	CHIP R	22K	J	1/10W	
R103			RK73FB2A221J	CHIP R	220	J	1/10W	
R104			RK73FB2A470J	CHIP R	47	J	1/10W	
R105			RK73FB2A391J	CHIP R	390	J	1/10W	
R107			RK73FB2A102J	CHIP R	1.0K	J	1/10W	
R108			RK73FB2A152J	CHIP R	1.5K	J	1/10W	
R109			RK73FB2A101J	CHIP R	100	J	1/10W	
R111			RK73FB2A473J	CHIP R	47K	J	1/10W	
R112			RK73FB2A560J	CHIP R	56	J	1/10W	
R113			RK73FB2A471J	CHIP R	470	J	1/10W	
R114			RK73FB2A680J	CHIP R	68	J	1/10W	
R115			RK73FB2A102J	CHIP R	1.0K	J	1/10W	
R116-118			RK73FB2A101J	CHIP R	100	J	1/10W	
R120			RK73FB2A223J	CHIP R	22K	J	1/10W	
R121			RK73FB2A473J	CHIP R	47K	J	1/10W	
R122			RK73FB2A682J	CHIP R	6.8K	J	1/10W	
R123			RK73FB2A330J	CHIP R	33	J	1/10W	
R124,125			RK73FB2A473J	CHIP R	47K	J	1/10W	
R126			RK73FB2A330J	CHIP R	33	J	1/10W	
R127,128			RK73FB2A221J	CHIP R	220	J	1/10W	
R129			RK73FB2A102J	CHIP R	1.0K	J	1/10W	
R130			RK73FB2A221J	CHIP R	220	J	1/10W	
R131			RK73FB2A152J	CHIP R	1.5K	J	1/10W	
R132			RK73FB2A330J	CHIP R	33	J	1/10W	
R133			RK73FB2A102J	CHIP R	1.0K	J	1/10W	
R134			RK73FB2A101J	CHIP R	100	J	1/10W	
R135			RK73FB2A222J	CHIP R	2.2K	J	1/10W	
R136			RK73FB2A101J	CHIP R	100	J	1/10W	
R137			RK73FB2A151J	CHIP R	150	J	1/10W	
R138			RK73FB2A223J	CHIP R	22K	J	1/10W	
R139			RK73FB2A104J	CHIP R	100K	J	1/10W	
R140			RK73FB2A393J	CHIP R	39K	J	1/10W	
R141			RK73FB2A473J	CHIP R	47K	J	1/10W	
R142			RK73FB2A331J	CHIP R	330	J	1/10W	
R143			RK73FB2A151J	CHIP R	150	J	1/10W	
R144			RK73FB2A680J	CHIP R	68	J	1/10W	
R145			RK73FB2A330J	CHIP R	33	J	1/10W	
R146			RK73FB2A151J	CHIP R	150	J	1/10W	
R147			RK73FB2A223J	CHIP R	22K	J	1/10W	
R148			RK73FB2A331J	CHIP R	330	J	1/10W	
R149			RK73FB2A330J	CHIP R	33	J	1/10W	
R150			R92-0670-05	CHIP R	0 OHM			
R151			RK73FB2A330J	CHIP R	33	J	1/10W	
R152			RK73FB2A390J	CHIP R	39	J	1/10W	
R153			R92-0670-05	CHIP R	0 OHM			
R154			RK73FB2A333J	CHIP R	33K	J	1/10W	

PARTS LSIT

TX-RX UNIT (X57-500X-XX)

Ref. No.	Address	New parts	Parts No.	Description				Desti-nation
R155			RK73FB2A102J	CHIP R	1.0K	J	1/10W	
R156			RK73FB2A330J	CHIP R	33	J	1/10W	
R157			RK73FB2A332J	CHIP R	3.3K	J	1/10W	
R158			RK73FB2A331J	CHIP R	330	J	1/10W	
R159			RK73FB2A330J	CHIP R	33	J	1/10W	
R160			RK73FB2A102J	CHIP R	1.0K	J	1/10W	
R161			RK73FB2A681J	CHIP R	680	J	1/10W	
R162			RK73FB2A473J	CHIP R	47K	J	1/10W	
R163			R92-0670-05	CHIP R	0 OHM			
R164			RK73FB2A331J	CHIP R	330	J	1/10W	
R165			RK73FB2A151J	CHIP R	150	J	1/10W	
R166			RK73FB2A680J	CHIP R	68	J	1/10W	
R167			RK73FB2A101J	CHIP R	100	J	1/10W	
R168			RK73FB2A561J	CHIP R	560	J	1/10W	
R169			RK73FB2A681J	CHIP R	680	J	1/10W	
R170			RK73FB2A330J	CHIP R	33	J	1/10W	
R171			RK73FB2A333J	CHIP R	33K	J	1/10W	
R172			RK73FB2A102J	CHIP R	1.0K	J	1/10W	
R173			RK73FB2A472J	CHIP R	4.7K	J	1/10W	
R174-176			RK73FB2A103J	CHIP R	10K	J	1/10W	
R177			RK73FB2A101J	CHIP R	100	J	1/10W	
R178			RK73FB2A472J	CHIP R	4.7K	J	1/10W	
R179			RK73FB2A223J	CHIP R	22K	J	1/10W	
R180			RK73FB2A273J	CHIP R	27K	J	1/10W	
R181			RK73FB2A101J	CHIP R	100	J	1/10W	
R182			RK73FB2A682J	CHIP R	6.8K	J	1/10W	
R191			RK73FB2A222J	CHIP R	2.2K	J	1/10W	
R192			RK73FB2A102J	CHIP R	1.0K	J	1/10W	
R193			RK73FB2A561J	CHIP R	560	J	1/10W	
R194			RK73FB2A222J	CHIP R	2.2K	J	1/10W	
R195			RK73FB2A560J	CHIP R	56	J	1/10W	
R196-198			RK73FB2A330J	CHIP R	33	J	1/10W	
R199			RK73FB2A101J	CHIP R	100	J	1/10W	
R200			RK73FB2A820J	CHIP R	82	J	1/10W	
R201			RK73FB2A101J	CHIP R	100	J	1/10W	
R202-205			RK73FB2A103J	CHIP R	10K	J	1/10W	
R207			RK73FB2A103J	CHIP R	10K	J	1/10W	
R208,209			RK73FB2A101J	CHIP R	100	J	1/10W	
R210			RK73FB2A104J	CHIP R	100K	J	1/10W	
R211			RK73FB2A332J	CHIP R	3.3K	J	1/10W	
R212			RK73FB2A473J	CHIP R	47K	J	1/10W	
R213			RK73FB2A224J	CHIP R	220K	J	1/10W	
R214			RK73FB2A331J	CHIP R	330	J	1/10W	
R215			RK73FB2A184J	CHIP R	180K	J	1/10W	
R216			RK73FB2A393J	CHIP R	39K	J	1/10W	
R217			RK73FB2A104J	CHIP R	100K	J	1/10W	
R218			RK73FB2A224J	CHIP R	220K	J	1/10W	
R219			RK73FB2A222J	CHIP R	2.2K	J	1/10W	
R220			RK73FB2A823J	CHIP R	82K	J	1/10W	
R221,222			RK73FB2A102J	CHIP R	1.0K	J	1/10W	
R223			RK73FB2A331J	CHIP R	330	J	1/10W	
R224			RK73FB2A104J	CHIP R	100K	J	1/10W	
R226-229			RK73FB2A103J	CHIP R	10K	J	1/10W	
R230			RK73FB2A222J	CHIP R	2.2K	J	1/10W	
R231			RK73FB2A474J	CHIP R	470K	J	1/10W	
R233			RK73FB2A224J	CHIP R	220K	J	1/10W	
R234			RK73FB2A102J	CHIP R	1.0K	J	1/10W	
R237			RK73FB2A391J	CHIP R	390	J	1/10W	
R238			RK73FB2A101J	CHIP R	100	J	1/10W	
R239			RK73FB2A104J	CHIP R	100K	J	1/10W	

Ref. No.	Address	New parts	Parts No.	Description				Desti-nation
R240			R92-0670-05	CHIP R	0 OHM			
R241			RK73FB2A104J	CHIP R	100K	J	1/10W	
R242			RK73FB2A472J	CHIP R	4.7K	J	1/10W	
R243			RK73FB2A272J	CHIP R	2.7K	J	1/10W	
R244,245			RK73FB2A223J	CHIP R	22K	J	1/10W	
R246,247			RK73FB2A104J	CHIP R	100K	J	1/10W	
R248			RK73FB2A473J	CHIP R	47K	J	1/10W	
R249,250			RK73FB2A104J	CHIP R	100K	J	1/10W	
R251			RK73FB2A224J	CHIP R	220K	J	1/10W	
R252			RK73FB2A104J	CHIP R	100K	J	1/10W	
R253			RK73FB2A471J	CHIP R	470	J	1/10W	
R254			RK73FB2A103J	CHIP R	10K	J	1/10W	
R255			RK73FB2A273J	CHIP R	27K	J	1/10W	
R256			R92-0670-05	CHIP R	0 OHM			
R260			RK73FB2A103J	CHIP R	10K	J	1/10W	
R261			RK73FB2A181J	CHIP R	180	J	1/10W	
R266			RK73FB2A472J	CHIP R	4.7K	J	1/10W	
R271			RK73FB2A101J	CHIP R	100	J	1/10W	
R275			RK73FB2A563J	CHIP R	56K	J	1/10W	
R278			RK73FB2A153J	CHIP R	15K	J	1/10W	
R279			R92-0670-05	CHIP R	0 OHM			
R280			RK73FB2A221J	CHIP R	220	J	1/10W	
R281			RK73FB2A102J	CHIP R	1.0K	J	1/10W	
R282			RK73FB2A272J	CHIP R	2.7K	J	1/10W	
R283,284			RK73FB2A101J	CHIP R	100	J	1/10W	
R285,286			RK73FB2A103J	CHIP R	10K	J	1/10W	
R287			RK73FB2A224J	CHIP R	220K	J	1/10W	
R288			R92-0670-05	CHIP R	0 OHM			
R289			RK73FB2A102J	CHIP R	1.0K	J	1/10W	
R290			RK73FB2A683J	CHIP R	68K	J	1/10W	
R291			RK73FB2A103J	CHIP R	10K	J	1/10W	
R292			RK73FB2A101J	CHIP R	100	J	1/10W	
R301			RK73FB2A470J	CHIP R	47	J	1/10W	
R317			RK73FB2A102J	CHIP R	1.0K	J	1/10W	
R319			RK73FB2A102J	CHIP R	1.0K	J	1/10W	
R323			R92-0670-05	CHIP R	0 OHM			
R324			RK73FB2A103J	CHIP R	10K	J	1/10W	
R326			RK73FB2A103J	CHIP R	10K	J	1/10W	
R327			RK73FB2A104J	CHIP R	100K	J	1/10W	
R328,329			RK73FB2A222J	CHIP R	2.2K	J	1/10W	
R330-333			RK73FB2A104J	CHIP R	100K	J	1/10W	
R334			RK73FB2A101J	CHIP R	100	J	1/10W	
R335			RK73FB2A473J	CHIP R	47K	J	1/10W	
R336			RK73FB2A271J	CHIP R	270	J	1/10W	
R337			RK73FB2A102J	CHIP R	1.0K	J	1/10W	
R338			R92-0670-05	CHIP R	0 OHM			
R339			RK73FB2A101J	CHIP R	100	J	1/10W	
R340			RK73FB2A103J	CHIP R	10K	J	1/10W	
R341			RK73FB2A273J	CHIP R	27K	J	1/10W	
R343			RK73FB2A472J	CHIP R	4.7K	J	1/10W	
R344			RK73FB2A103J	CHIP R	10K	J	1/10W	
R345			RK73FB2A104J	CHIP R	100K	J	1/10W	
R346,347			RK73FB2A4R7J	CHIP R	4.7	J	1/10W	
R349			RK73FB2A183J	CHIP R	18K	J	1/10W	
R350			RK73FB2A332J	CHIP R	3.3K	J	1/10W	
R351			RK73FB2A103J	CHIP R	10K	J	1/10W	
R352			RK73FB2A473J	CHIP R	47K	J	1/10W	
R353			RK73FB2A334J	CHIP R	330K	J	1/10W	
R354			RK73FB2A224J	CHIP R	220K	J	1/10W	
R355			RK73FB2A104J	CHIP R	100K	J	1/10W	

PARTS LIST

TX-RX UNIT (X57-500X-XX)

Ref. No.	Address	New parts	Parts No.	Description	Desti-nation
R356,357			RK73FB2A102J	CHIP R 1.0K J 1/10W	
R358			RK73FB2A101J	CHIP R 100 J 1/10W	
R359			R92-0670-05	CHIP R 0 OHM	
R360			RK73FB2A183J	CHIP R 18K J 1/10W	
R361-364			RK73FB2A101J	CHIP R 100 J 1/10W	
R365			RK73FB2A681J	CHIP R 680 J 1/10W	
R366			RK73FB2A103J	CHIP R 10K J 1/10W	
R367			RK73FB2A102J	CHIP R 1.0K J 1/10W	
R368			R92-0670-05	CHIP R 0 OHM	
R369			RK73FB2A103J	CHIP R 10K J 1/10W	
R370			RK73FB2A564J	CHIP R 560K J 1/10W	
R371,372			RK73FB2A104J	CHIP R 100K J 1/10W	
R374			RK73FB2A104J	CHIP R 100K J 1/10W	
R375			RK73FB2A102J	CHIP R 1.0K J 1/10W	
R376			RK73FB2A681J	CHIP R 680 J 1/10W	
R378			RK73FB2A103J	CHIP R 10K J 1/10W	
R379-381			RK73FB2A104J	CHIP R 100K J 1/10W	
R382			RK73FB2A102J	CHIP R 1.0K J 1/10W	
R403			RK73FB2A333J	CHIP R 33K J 1/10W	
R404			RK73FB2A104J	CHIP R 100K J 1/10W	
R405			RK73FB2A152J	CHIP R 1.5K J 1/10W	
R406			RK73FB2A122J	CHIP R 1.2K J 1/10W	
R407			RK73FB2A821J	CHIP R 820 J 1/10W	
R408			RK73FB2A151J	CHIP R 150 J 1/10W	
R409			RK73FB2A182J	CHIP R 1.8K J 1/10W	
R410			RK73FB2A392J	CHIP R 3.9K J 1/10W	
R411			RK73FB2A104J	CHIP R 100K J 1/10W	
R412			RK73FB2A392J	CHIP R 3.9K J 1/10W	
R413			RK73FB2A101J	CHIP R 100 J 1/10W	
R415			RK73FB2A472J	CHIP R 4.7K J 1/10W	
R416			R92-0670-05	CHIP R 0 OHM	
R417			RK73FB2A153J	CHIP R 15K J 1/10W	
R418			RK73FB2A101J	CHIP R 100 J 1/10W	
R420,421			RK73FB2A100J	CHIP R 10 J 1/10W	
R422			RK73FB2A102J	CHIP R 1.0K J 1/10W	
R423			RK73FB2A223J	CHIP R 22K J 1/10W	
R424			RK73FB2A102J	CHIP R 1.0K J 1/10W	
R425			RK73FB2A333J	CHIP R 33K J 1/10W	
R426			RK73FB2A223J	CHIP R 22K J 1/10W	
R427			RK73FB2A124J	CHIP R 120K J 1/10W	
R428			RK73FB2A104J	CHIP R 100K J 1/10W	
R429			RK73FB2A273J	CHIP R 27K J 1/10W	
R430,431			R92-0150-05	JUMPER REST 0 OHM	
R432			RK73FB2A560J	CHIP R 56 J 1/10W	
R433,434			RK73FB2A103J	CHIP R 10K J 1/10W	
R435			RK73FB2A563J	CHIP R 56K J 1/10W	
R436			RK73FB2A153J	CHIP R 15K J 1/10W	
R450-455			RK73FB2A101J	CHIP R 100 J 1/10W	
R456-461			RK73FB2A331J	CHIP R 330 J 1/10W	
R500			RK73FB2A103J	CHIP R 10K J 1/10W	
R501			RK73FB2A223J	CHIP R 22K J 1/10W	
R502			RK73FB2A222J	CHIP R 2.2K J 1/10W	
R503			RD14CB2C101J	RD 100 J 1/6W	
R504			RD14CB2C100J	RD 10 J 1/6W	
R505,506			RK73FB2A473J	CHIP R 47K J 1/10W	
R507-508			RK73FB2A101J	CHIP R 100 J 1/10W	
R509			RK73FB2A102J	CHIP R 1.0K J 1/10W	
R510			RK73FB2A681J	CHIP R 680 J 1/10W	
R511			RK73FB2A101J	CHIP R 100 J 1/10W	
R512			RK73FB2A471J	CHIP R 470 J 1/10W	

Ref. No.	Address	New parts	Parts No.	Description	Desti-nation
R513			RK73FB2A681J	CHIP R 680 J 1/10W	
R514			RK73FB2A101J	CHIP R 100 J 1/10W	
R515			RK73FB2A471J	CHIP R 470 J 1/10W	
R516			RK73FB2A271J	CHIP R 270 J 1/10W	
R517			RK73FB2A184J	CHIP R 180K J 1/10W	
R518			RK73FB2A102J	CHIP R 1.0K J 1/10W	
R519			RK73FB2A123J	CHIP R 12K J 1/10W	
R520			RK73FB2A103J	CHIP R 10K J 1/10W	
R521			RK73FB2A102J	CHIP R 1.0K J 1/10W	
R522			RK73FB2A392J	CHIP R 3.9K J 1/10W	
R523			RK73FB2A822J	CHIP R 8.2K J 1/10W	
R524			RK73FB2A684J	CHIP R 680K J 1/10W	
R525			RK73FB2A182J	CHIP R 1.8K J 1/10W	
R526			RK73FB2A333J	CHIP R 33K J 1/10W	
R527			RK73FB2A104J	CHIP R 100K J 1/10W	
R528			RK73FB2A220J	CHIP R 22 J 1/10W	
R529-531			RK73FB2A472J	CHIP R 4.7K J 1/10W	
R532			RK73FB2A104J	CHIP R 100K J 1/10W	
R533			RK73FB2A331J	CHIP R 330 J 1/10W	
R534			RK73FB2A271J	CHIP R 270 J 1/10W	
R535,536			RK73FB2A472J	CHIP R 4.7K J 1/10W	
R537			RK73FB2A560J	CHIP R 56 J 1/10W	
R538			RK73FB2A471J	CHIP R 470 J 1/10W	
R539			RK73FB2A682J	CHIP R 6.8K J 1/10W	
R540			RK73FB2A102J	CHIP R 1.0K J 1/10W	
R541			RK73FB2A331J	CHIP R 330 J 1/10W	
R542			RK73FB2A220J	CHIP R 22 J 1/10W	
R543			RK73FB2A101J	CHIP R 100 J 1/10W	
R547			RK73FB2A222J	CHIP R 2.2K J 1/10W	
R548,549			RK73FB2A561J	CHIP R 560 J 1/10W	
R550			RK73FB2A223J	CHIP R 22K J 1/10W	
R551			RK73FB2A103J	CHIP R 10K J 1/10W	
R552			RK73FB2A101J	CHIP R 100 J 1/10W	
R553			RK73FB2A471J	CHIP R 470 J 1/10W	
R554			RK73FB2A103J	CHIP R 10K J 1/10W	
R555			RK73FB2A153J	CHIP R 15K J 1/10W	
R556			RK73FB2A221J	CHIP R 220 J 1/10W	
R557			RK73FB2A101J	CHIP R 100 J 1/10W	
R558			RK73FB2A102J	CHIP R 1.0K J 1/10W	
R559			RK73FB2A681J	CHIP R 680 J 1/10W	
R560			R92-0670-05	CHIP R 0 OHM	
R561			RK73FB2A101J	CHIP R 100 J 1/10W	
R562			RK73FB2A332J	CHIP R 3.3K J 1/10W	
R563,564			RK73FB2A102J	CHIP R 1.0K J 1/10W	
R565			RK73FB2A221J	CHIP R 220 J 1/10W	
R566			RK73FB2A101J	CHIP R 100 J 1/10W	
R567			RK73FB2A680J	CHIP R 68 J 1/10W	
R568			RK73FB2A821J	CHIP R 820 J 1/10W	
R569			RK73FB2A680J	CHIP R 68 J 1/10W	
R570			RK73FB2A103J	CHIP R 10K J 1/10W	
R571			RK73FB2A222J	CHIP R 2.2K J 1/10W	
R572			RK73FB2A331J	CHIP R 330 J 1/10W	
R573,574			RK73FB2A101J	CHIP R 100 J 1/10W	
R575			RK73FB2A471J	CHIP R 470 J 1/10W	
R576			RK73FB2A470J	CHIP R 47 J 1/10W	
R577			RK73FB2A220J	CHIP R 22 J 1/10W	
R578			RK73FB2A222J	CHIP R 2.2K J 1/10W	
R579,580			RK73FB2A561J	CHIP R 560 J 1/10W	
R581			RK73FB2A223J	CHIP R 22K J 1/10W	
R582			RK73FB2A103J	CHIP R 10K J 1/10W	

PARTS LSIT

TX-RX UNIT (X57-500X-XX)

Ref. No.	Address	New parts	Parts No.	Description	Destination
R583			RK73FB2A101J	CHIP R 100 J 1/10W	
R584			RK73FB2A471J	CHIP R 470 J 1/10W	
R585			RK73FB2A103J	CHIP R 10K J 1/10W	
R586			RK73FB2A153J	CHIP R 15K J 1/10W	
R587			RK73FB2A221J	CHIP R 220 J 1/10W	
R588			RK73FB2A101J	CHIP R 100 J 1/10W	
R589			RK73FB2A102J	CHIP R 1.0K J 1/10W	
R590			RK73FB2A681J	CHIP R 680 J 1/10W	
R591			R92-0670-05	CHIP R 0 OHM	
R592			RK73FB2A101J	CHIP R 100 J 1/10W	
R593			RK73FB2A391J	CHIP R 390 J 1/10W	
R594			RK73FB2A223J	CHIP R 22K J 1/10W	
R595			RK73FB2A103J	CHIP R 10K J 1/10W	
R596,597			RK73FB2A101J	CHIP R 100 J 1/10W	
R598			RK73FB2A471J	CHIP R 470 J 1/10W	
R599			RK73FB2A102J	CHIP R 1.0K J 1/10W	
R600,601			RK73FB2A103J	CHIP R 10K J 1/10W	
R602			RK73FB2A101J	CHIP R 100 J 1/10W	
R603			RK73FB2A471J	CHIP R 470 J 1/10W	
R604			RK73FB2A333J	CHIP R 33K J 1/10W	
R605			RK73FB2A682J	CHIP R 6.8K J 1/10W	
R606			RK73FB2A150J	CHIP R 15 J 1/10W	
R607			RK73FB2A221J	CHIP R 220 J 1/10W	
R608,609			RK73FB2A470J	CHIP R 47 J 1/10W	
R610			RK73FB2A471J	CHIP R 470 J 1/10W	
R611-613			R92-0670-05	CHIP R 0 OHM	
R614			RK73FB2A101J	CHIP R 100 J 1/10W	
R615			RK73FB2A122J	CHIP R 1.2K J 1/10W	
R616			RK73FB2A331J	CHIP R 330 J 1/10W	
R617			RK73FB2A101J	CHIP R 100 J 1/10W	
R618			RK73FB2A822J	CHIP R 8.2K J 1/10W	
R619			RK73FB2A272J	CHIP R 2.7K J 1/10W	
R620			RK73FB2A471J	CHIP R 470 J 1/10W	
R621			RK73FB2A101J	CHIP R 100 J 1/10W	
R622,623			RK73FB2A472J	CHIP R 4.7K J 1/10W	
R624			RK73FB2A101J	CHIP R 100 J 1/10W	
R625			RK73FB2A681J	CHIP R 680 J 1/10W	
R626			RK73FB2A102J	CHIP R 1.0K J 1/10W	
R627			RK73FB2A183J	CHIP R 18K J 1/10W	
R628			RK73FB2A122J	CHIP R 1.2K J 1/10W	
R629			RK73FB2A102J	CHIP R 1.0K J 1/10W	
R630			RK73FB2A683J	CHIP R 68K J 1/10W	
R631			RK73FB2A182J	CHIP R 1.8K J 1/10W	
R632			RK73FB2A151J	CHIP R 150 J 1/10W	
R633			RK73FB2A102J	CHIP R 1.0K J 1/10W	
R634			RK73FB2A221J	CHIP R 220 J 1/10W	
R639			RK73FB2A101J	CHIP R 100 J 1/10W	
R640			RK73FB2A472J	CHIP R 4.7K J 1/10W	
R641			RK73FB2A271J	CHIP R 270 J 1/10W	
R642			RK73FB2A332J	CHIP R 3.3K J 1/10W	
R643			RK73FB2A101J	CHIP R 100 J 1/10W	
R644			RK73FB2A682J	CHIP R 6.8K J 1/10W	
R645			RK73FB2A271J	CHIP R 270 J 1/10W	
R646			RK73FB2A332J	CHIP R 3.3K J 1/10W	
R647			RK73FB2A101J	CHIP R 100 J 1/10W	
R648			RK73FB2A682J	CHIP R 6.8K J 1/10W	
R649			RK73FB2A271J	CHIP R 270 J 1/10W	
R650			RK73FB2A332J	CHIP R 3.3K J 1/10W	
R651			RK73FB2A101J	CHIP R 100 J 1/10W	
R652			RK73FB2A471J	CHIP R 470 J 1/10W	

Ref. No.	Address	New parts	Parts No.	Description	Destination
R653			RK73FB2A223J	CHIP R 22K J 1/10W	
R654			RK73FB2A103J	CHIP R 10K J 1/10W	
R655			RK73FB2A561J	CHIP R 560 J 1/10W	
R656,657			RK73FB2A330J	CHIP R 33 J 1/10W	
R658			RK73FB2A562J	CHIP R 5.6K J 1/10W	
R659			RK73FB2A103J	CHIP R 10K J 1/10W	
R660			RK73FB2A101J	CHIP R 100 J 1/10W	
R661			RK73FB2A221J	CHIP R 220 J 1/10W	
R662			RK73FB2A471J	CHIP R 470 J 1/10W	
R663			RK73FB2A100J	CHIP R 10 J 1/10W	
R664			RK73FB2A471J	CHIP R 470 J 1/10W	
R665			RK73FB2A332J	CHIP R 3.3K J 1/10W	
R666,667			RK73FB2A472J	CHIP R 4.7K J 1/10W	
R668			RK73FB2A470J	CHIP R 47 J 1/10W	
R669			RK73FB2A471J	CHIP R 470 J 1/10W	
R671			RK73FB2A101J	CHIP R 100 J 1/10W	
R673-678			RK73FB2A101J	CHIP R 100 J 1/10W	
R696,697			RK73FB2A103J	CHIP R 10K J 1/10W	
R698			RK73FB2A152J	CHIP R 1.5K J 1/10W	
R699			RK73FB2A102J	CHIP R 1.0K J 1/10W	
R700			R92-0670-05	CHIP R 0 OHM	
R701			RK73FB2A331J	CHIP R 330 J 1/10W	
R702			RK73FB2A180J	CHIP R 18 J 1/10W	
R703			RK73FB2A331J	CHIP R 330 J 1/10W	
R704			RK73FB2A102J	CHIP R 1.0K J 1/10W	
R705			RK73FB2A330J	CHIP R 33 J 1/10W	
R706			RK73FB2A393J	CHIP R 39K J 1/10W	
R707			RK73FB2A470J	CHIP R 47 J 1/10W	
R708			RK73FB2A472J	CHIP R 4.7K J 1/10W	
R709			RK73FB2A103J	CHIP R 10K J 1/10W	
R710			RK73FB2A102J	CHIP R 1.0K J 1/10W	
R711			RK73FB2A471J	CHIP R 470 J 1/10W	
R712			RK73FB2A330J	CHIP R 33 J 1/10W	
R715			RK73FB2A101J	CHIP R 100 J 1/10W	
R716			RK73FB2A682J	CHIP R 6.8K J 1/10W	
R717			RK73FB2A102J	CHIP R 1.0K J 1/10W	
R718			RK73FB2A331J	CHIP R 330 J 1/10W	
R719			RK73FB2A220J	CHIP R 22 J 1/10W	
R720			RK73FB2A683J	CHIP R 68K J 1/10W	
R721			RK73FB2A102J	CHIP R 1.0K J 1/10W	
R722-725			RK73FB2A331J	CHIP R 330 J 1/10W	
R800			RK73FB2A221J	CHIP R 220 J 1/10W	
R801			RK73FB2A102J	CHIP R 1.0K J 1/10W	
R802			RK73FB2A103J	CHIP R 10K J 1/10W	
R803			RK73FB2A102J	CHIP R 1.0K J 1/10W	
R804			R92-0670-05	CHIP R 0 OHM	
R805			RK73FB2A223J	CHIP R 22K J 1/10W	
R806			RK73FB2A333J	CHIP R 33K J 1/10W	
R807			RK73FB2A683J	CHIP R 68K J 1/10W	
R808,809			RK73FB2A103J	CHIP R 10K J 1/10W	
R810			RK73FB2A102J	CHIP R 1.0K J 1/10W	
R811			RK73FB2A152J	CHIP R 1.5K J 1/10W	
R812			RK73FB2A333J	CHIP R 33K J 1/10W	
R813			RK73FB2A221J	CHIP R 220 J 1/10W	
R814			RK73FB2A103J	CHIP R 10K J 1/10W	
R815			RK73FB2A102J	CHIP R 1.0K J 1/10W	
R816			RK73FB2A563J	CHIP R 56K J 1/10W	
R817			RK73FB2A101J	CHIP R 100 J 1/10W	
R818			RK73FB2A681J	CHIP R 680 J 1/10W	
R819			RK73FB2A682J	CHIP R 6.8K J 1/10W	

PARTS LIST

TX-RX UNIT (X57-500X-XX)

Ref. No.	Address	New parts	Parts No.	Description	Destination
VR1			R12-6711-05	VARIABLE R 4.7K	
VR2			R12-6707-05	VARIABLE R 1.0K	
VR3			R12-6717-05	VARIABLE R 47K	
VR4,5			R12-6713-05	VARIABLE R 10K	
VR8			R12-6740-05	VARIABLE R 10K	
VR9			R12-6703-05	VARIABLE R 220	
VR450		*	R31-0615-05	VARIABLE R	
VR451,452		*	R31-0612-05	VARIABLE R	
K1			S51-1428-05	RELAY	
K2			S51-1420-05	RELAY	
D1			LFB01	DIODE	
D2			RLS245	DIODE	
D3,4			V08(G)	DIODE	
D5			RLS245	DIODE	
D6-8			RN731H	DIODE	
D9			LFB01	DIODE	
D10			RN731H	DIODE	
D11			LFB01	DIODE	
D12			RN731H	DIODE	
D13			LFB01	DIODE	
D14			RN731H	DIODE	
D15			LFB01	DIODE	
D16			RN731H	DIODE	
D17			LFB01	DIODE	
D18			RN731H	DIODE	
D19			LFB01	DIODE	
D20			RN731H	DIODE	
D21			LFB01	DIODE	
D22			RN731H	DIODE	
D23			LFB01	DIODE	
D24			RN731H	DIODE	
D25			LFB01	DIODE	
D26			RN731H	DIODE	
D27			LFB01	DIODE	
D30			LFB01	DIODE	
D31			MA110	DIODE (or 1SS355)	
D32			LFB01	DIODE	
D33			DAP236K	DIODE	
D34			1SS312	DIODE	
D35-37			DAP236K	DIODE	
D38,39			LFB01	DIODE	
D40			DAP236K	DIODE	
D41			1SS312	DIODE	
D42			DAP236K	DIODE	
D43			RN731H	DIODE	
D44			1SS312	DIODE	
D45			LFB01	DIODE	
D46,47			DAP236K	DIODE	
D48-50			MA110	DIODE (or 1SS355)	
D51			LFB01	DIODE	
D52			RN731H	DIODE	
D53,54			DAP236K	DIODE	
D55			LFB01	DIODE	
D56			RN739D	DIODE	
D57			B30-2001-05	LED	
D58			MA110	DIODE (or 1SS355)	
D61			LFB01	DIODE	
D62			RB751H	DIODE	
D63			1SS226	DIODE	

Ref. No.	Address	New parts	Parts No.	Description	Destination
D64			02CZ6.2(Y)	DIODE	
D68			LFB01	DIODE	
D69			RB751H	DIODE	
D71			RB751H	DIODE	
D73			02CZ3.3(Z)	ZENER	
D74			02CZ4.7(Y)	ZENER	
D75			MA110	DIODE (or 1SS355)	
D76			1SS226	DIODE	
D77			02CZ6.2(Y)	ZENER	
D82			LFB01	DIODE	
D85			MA110	DIODE (or 1SS355)	
D89-92			MA110	DIODE (or 1SS355)	
D95			MA110	DIODE (or 1SS355)	
D96			02CZ5.1(Y)	ZENER	
D97			DAP236K	DIODE	
D98			DAN202K	DIODE	
D99,100		*	02CZ24(Y)	ZENER	
D101,102			MA110	DIODE (or 1SS355)	
D103,104			LFB01	DIODE	
D500,501			1SV269	VARIABLE CAP	
D502			RLS135	DIODE	
D503			1SV269	VARIABLE CAP	
D504			RLS135	DIODE	
D505			1SV269	VARIABLE CAP	
D506			RLS135	DIODE	
D507			DAP202K	DIODE	
D508,509			MA110	DIODE (or 1SS355)	
D800			MA716	DIODE	
IC1			NJM2904M	IC (OP AMP X2)	
IC2			UPC1037GR	IC (BALANCED MODULATOR)	
IC3			BU2090FS	IC (SHIFT/STORE REGISTER)	
IC4			BU4066BCFV	IC (ANALOG SWITCH X4)	
IC5			NJM2902M	IC (OP AMP X4)	
IC6			M62363FP	IC (8bit D/A CONVERTER)	
IC7			KCD10	HIC	
IC8			LA4446	IC (AF POWER AMP)	
IC9			BU4066BCFV	IC (ANALOG SWITCH X4)	
IC11			TC9174F	IC (CMOS I/0 EXTENSION)	
IC12			BU4066BCFV	IC (ANALOG SWITCH X4)	
IC13			NJM2904M	IC (OP AMP X2)	
IC14			NJU3718G	IC (20BIT SERIAL-PARA CHANGER)	
IC15		*	KCD11	HIC	
IC16		*	KCC11	HIC	
IC17			TC7S08F	IC (2CH AND GATE)	
IC500			MB86001PF	IC (PLL FREQUENCY SYNTHESIZER)	
IC501,502			F71022	IC (DDS)	
IC503,504			UPC1037GR	IC (BALANCED MODULATOR)	
IC505			UPC1686G	IC (MIX)	
IC506			SN76514N	IC (MIXER)	
IC507			MB86001PF	IC (PLL FREQUENCY SYNTHESIZER)	
IC508			BU4S66	IC (ANALOG SWITCH)	
IC510			TC7S08F	IC (2CH AND GATE)	
IC511			NJM78L08UA	IC (VOLTAGE REGULATOR/ +8V)	
IC900			ADM232LAR	IC (RS-232C DRIVERS/RECEIVERS)	
Q1			DTA124EK	DIGITAL TRANSISTOR	
Q2			2SD1757K(S)	TRANSISTOR	
Q3			2SB1188(Q,R)	TRANSISTOR	
Q4			DTC143TK	DIGITAL TRANSISTOR	
Q5-8			2SK520(K44)	FET	
Q9			RU201	TRANSISTOR	

TS-570D

PARTS LSIT

TX-RX UNIT (X57-500X-XX)
LCD ASSY (B38-0765-05)

Ref. No.	Address	New parts	Parts No.	Description	Desti-nation
Q10			2SK520(K43)	FET	
Q11,12			3SK131(M)	FET	
Q13			2SK520(K43)	FET	
Q14,15			2SC2412K(S)	TRANSISTOR	
Q16			2SC3357	TRANSISTOR	
Q17,18			2SK520(K44)	FET	
Q20			DTA124EK	DIGITAL TRANSISTOR	
Q21,22			2SC2412K(S)	TRANSISTOR	
Q24			FMC2	TRANSISTOR	
Q25			3SK131(M)	FET	
Q26			DTA143EK	DIGITAL TRANSISTOR	
Q27			3SK131(M)	FET	
Q28			3SK184(R)	FET	
Q29,30			3SK131(M)	FET	
Q31			3SK184(R)	FET	
Q35			2SC2954	TRANSISTOR	
Q36			2SC2412K(S)	TRANSISTOR	
Q37			DTC114EK	DIGITAL TRANSISTOR	
Q38			2SC2412K(S)	TRANSISTOR	
Q39			2SA1037K(R)	TRANSISTOR	
Q40,41			2SC2412K(S)	TRANSISTOR	
Q42			2SB1188(Q,R)	TRANSISTOR	
Q49			2SD1624(S)	TRANSISTOR	
Q50			DTC114EK	DIGITAL TRANSISTOR	
Q51			DTC143TK	DIGITAL TRANSISTOR	
Q52			DTC124EK	DIGITAL TRANSISTOR	
Q57			DTC114EK	DIGITAL TRANSISTOR	
Q59			FMA5	TRANSISTOR	
Q61			FMA5	TRANSISTOR	
Q64			2SC2412K(S)	TRANSISTOR	
Q65-67			DTC114EK	DIGITAL TRANSISTOR	
Q68,69			2SB1188(Q,R)	TRANSISTOR	
Q70			DTC114EK	DIGITAL TRANSISTOR	
Q71			DTC143EK	DIGITAL TRANSISTOR	
Q72			FMG3A	TRANSISTOR	
Q73			DTA143EK	DIGITAL TRANSISTOR	
Q75-79			DTC114EK	DIGITAL TRANSISTOR	
Q80			DTC124EK	DIGITAL TRANSISTOR	
Q81			DTC114EK	DIGITAL TRANSISTOR	
Q500-503			2SC2714(Y)	TRANSISTOR	
Q504			2SC2412K(S)	TRANSISTOR	
Q505-507			2SC3722K(R)	TRANSISTOR	
Q508			DTC143TK	DIGITAL TRANSISTOR	
Q509			2SK1875(V)	FET	
Q510,511			2SC2714(Y)	TRANSISTOR	
Q512			2SC2412K(S)	TRANSISTOR	
Q513			2SC2712(GR)	TRANSISTOR	
Q514-517			2SC2412K(S)	TRANSISTOR	
Q518			2SC2712(GR)	TRANSISTOR	
Q519,520			2SC2412K(S)	TRANSISTOR	
Q521,522			2SC2714(Y)	TRANSISTOR	
Q523			2SC2412K(S)	TRANSISTOR	
Q524-526			2SC3722K(R)	TRANSISTOR	
Q527			DTC114EK	DIGITAL TRANSISTOR	
Q528			2SK1875(V)	FET	
Q529			DTC114EK	DIGITAL TRANSISTOR	
Q530			2SK1875(V)	FET	
Q531			DTC114EK	DIGITAL TRANSISTOR	
Q532			2SK1875(V)	FET	
Q533-535			2SC2714(Y)	TRANSISTOR	
Q543			2SC2714(Y)	TRANSISTOR	
Q544			2SC2412K(R)	TRANSISTOR	
Q545,546			2SC2714(Y)	TRANSISTOR	
Q800			2SC2714(Y)	TRANSISTOR	
Q801			DTC114EK	DIGITAL TRANSISTOR	
Q802			2SC2714(Y)	TRANSISTOR	
Q803			2SC2412K(S)	TRANSISTOR	
Q804			2SC2714(Y)	TRANSISTOR	
Q805			2SC2412K(S)	TRANSISTOR	
Q806			2SC2714(Y)	TRANSISTOR	
Q807			DTA114EK	DIGITAL TRANSISTOR	
TH1			157-502-53002	THERMISTOR (5K)	
TH2			157-501-53009	THERMISTOR (500)	
TH3			157-302-53008	THERMISTOR (3K)	
TH4			157-102-53003	THERMISTOR (1K)	
TH5			157-502-53002	THERMISTOR (5K)	
TH6			157-102-53003	THERMISTOR (1K)	
TH7			157-103-55001	THERMISTOR (10K)	
TH8			157-102-53003	THERMISTOR (1K)	
LCD ASSY (B38-0765-05)					
C1			CK73FB1H103K	CHIP C 0.010UF K	
C2-10			CK73FB1H102K	CHIP C 1000PF K	
C11			CK73FF1E104Z	CHIP C 0.10UF Z	
C12-21			CK73FB1H103K	CHIP C 0.010UF K	
C22		*	C92-0672-05	CHIP TAN 22UF 16WV	
C23-26			CK73FB1H103K	CHIP C 0.010UF K	
C27			CC73FSL1H681J	CHIP C 680PF J	
C28-40			CK73FB1HXXXJ	CHIP C	
C41		*	C92-0677-05	CHIP TAN 22UF 25WV	
C42			CK73FB1H103K	CHIP C 0.010UF K	
C43			CK73FB1H223K	CHIP C 0.022UF K	
CNI		*	E40-5880-08	CONNECTOR (26P)	
CN2			E40-3247-05	CONNECTOR (3P)	
CN3		*	E29-1161-08	RUBBER CONNECTOR	
CN4,5		*	E29-1162-08	RUBBER CONNECTOR	
JI			E06-0858-15	MIC CONNECTOR (8P)	
L1			L40-1292-18		
R1-37			RK73FB2AXXXJ	CHIP R	
R38,39			R92-0699-05	CHIP R 10 J 1/2W	
R40			RK73FB2A100J	CHIP R 10 J 1/10W	
R41			RK73FB2A182J	CHIP R 1.8K J 1/10W	
SW3-50			S70-0447-05	TACT SWITCH	
D1-15			1SS355	DIODE	
IC1			MSM5265GS-BK	IC (LCD DRIVER)	
IC2			NJU6432BFE1	IC	
IC3			NJU3715G	IC (SER PARA CHANGEOVER)	
LCD1		*	B38-0779-08	LCD ELEMENT	
PL1-6		*	B30-2163-08	LAMP	
Q1			2SA1641(S,T)	TRANSISTOR	
Q2			2SC2712(Y)	TRANSISTOR	
Q3			2SA1162(Y)	TRANSISTOR	
Q4-6		*	DTC123EK	TRANSISTOR	
Q7			DTC144EK	TRANSISTOR	
SW1		*	W02-1901-05	ENCODER (MULTI/CH)	
SW2		*	W02-1902-05	ENCODER (RIT/XIT)	

TS-570D TS-570D

EXPLODED VIEW

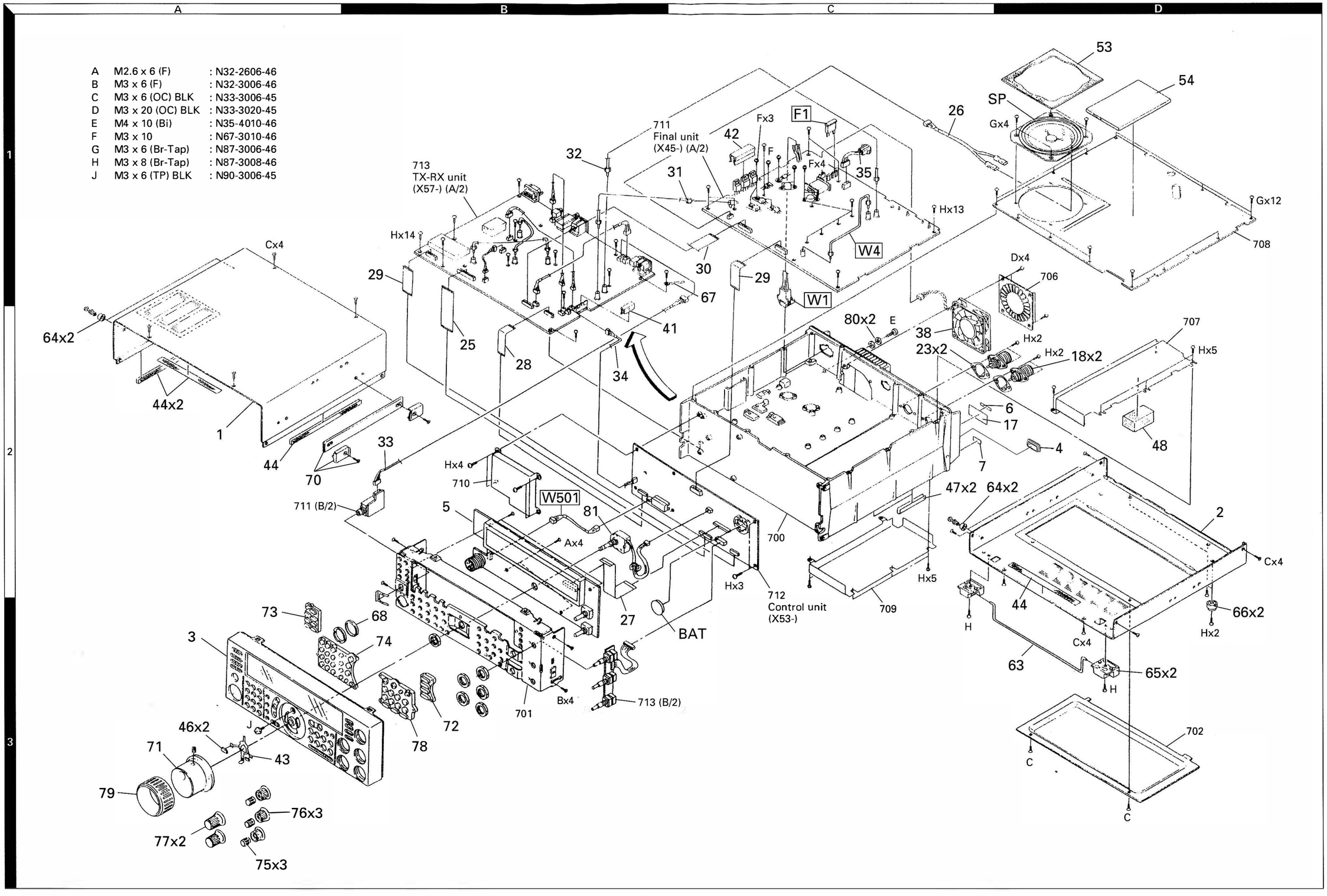

Parts with the exploded numbers larger than 700 are not supplied.

PACKING

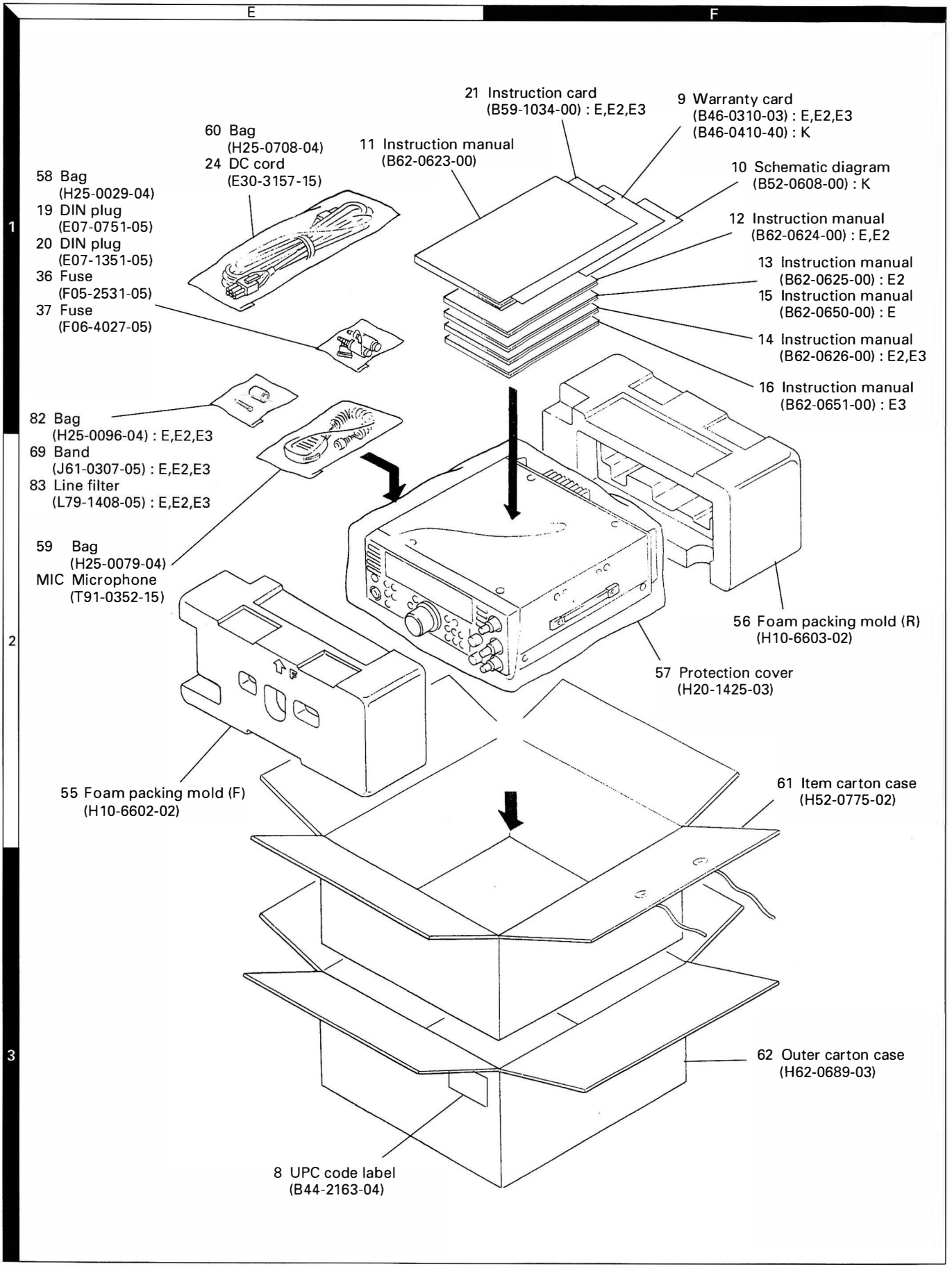
E
F
1
2
3
21 Instruction card
(B59-1034-00) : E,E2,E3
9 Warranty card
(B46-0310-03) : E,E2,E3
(B46-0410-40) : K
60 Bag
(H25-0708-04)
24 DC cord
(E30-3157-15)
11 Instruction manual
(B62-0623-00)
10 Schematic diagram
(B52-0608-00) : K
58 Bag
(H25-0029-04)
19 DIN plug
(E07-0751-05)
20 DIN plug
(E07-1351-05)
36 Fuse
(F05-2531-05)
37 Fuse
(F06-4027-05)
12 Instruction manual
(B62-0624-00) : E,E2
13 Instruction manual
(B62-0625-00) : E2
15 Instruction manual
(B62-0650-00) : E
14 Instruction manual
(B62-0626-00) : E2,E3
16 Instruction manual
(B62-0651-00) : E3
82 Bag
(H25-0096-04) : E,E2,E3
69 Band
(J61-0307-05) : E,E2,E3
83 Line filter
(L79-1408-05) : E,E2,E3
59 Bag
(H25-0079-04)
MIC Microphone
(T91-0352-15)
56 Foam packing mold (R)
(H10-6603-02)
57 Protection cover
(H20-1425-03)
55 Foam packing mold (F)
(H10-6602-02)
61 Item carton case
(H52-0775-02)
62 Outer carton case
(H62-0689-03)
8 UPC code label
(B44-2163-04)

ADJUSTMENT

Required Test Equipment

1. DC Voltmeter (DC V.M)
1) Input resistance : More than 1MΩ
2) Voltage range : 1.5 to 1000V AC/DC
Note : A high-recision multimeter may be used. However, accurate readings can not be obtained for high-impedance circuits.

2. DC Ammeter
1) Current range : 100mA, 1.5A, 15A, high-precision ammeter may be used.

3. RF VTVM (RF V.M)
1) Input impedance : 1MΩ and less than 3pF, min.
2) Voltage range : 10mV to 300V
3) Frequency range : 10kHz to 500MHz

4. AF Voltmeter (AF V.M)
1) Frequency range : 50Hz to 10kHz
2) Input resistance : 1MΩ or greater
3) Voltage range : 10mV to 30V

5. AF Generator (AG)
1) Frequency range : 200Hz to 5kHz
2) Output : 1mV or less to 1V, low distortion

6. AF Dummy Load (DM. SP)
1) Impedance : 8Ω
2) Dissipation : 3W or greater

7. Oscilloscope
Requires high sensitivity, and external synchronization capability (150MHz or greater).

8. Sweep Generator (Sweep G.)
1) Center frequency : 50kHz to 90MHz
2) Frequency deviation : Maximum ±35kHz
3) Output voltage : 100mV or greater

9. Standard Signal Generator (SSG)
1) Frequency range : 50kHz to 50MHz
2) Output : –133dBm/0.05μV to 7dBm/500mV
3) Output impedance : 50Ω
4) AM and FM modulation can be possible
Note : Generator must be frequency stable.

10. Frequency Counter (f. counter)
1) Minimum input voltage : 50mV
2) Frequency range : 150MHz or greater

11. Noise Generator (Noise G.)
Must generate ignition noise containing harmonics beyond 30MHz.

12. RF Dummy Load
1) Impedance : 150Ω and 50Ω
2) Dissipation : 150W or greater

13. Linear Detector
1) Frequency range : 30MHz

14. Power Meter
1) Impedance : 50Ω
2) Dissipation : 300W continuous or greater
3) Frequency limits : 60MHz or greater

15. Spectrum Analyzer
1) Frequency range : 100kHz to 110MHz or greater
2) Bandwidth : 1kHz to 3MHz

16. Detector
1) For adjustment of BPF

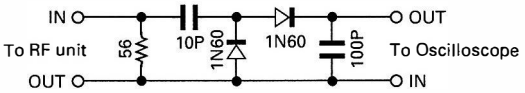

2) For adjustment of PLL/VCO BPF

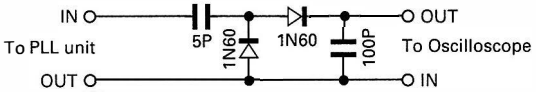

17. Directional Coupler

18. Monitor Receiver
R-1000 class

19. Microphone
MC-43S or MC-60S8

20. Tracking Generator

21. Distortion Meter

22. Double Signal Pad (50Ω)

ADJUSTMENT

Preparation

Unless otherwise specified, knobs and switches should be set as follows.

POWER	ON	SQL VR	0	AF VR	0
ATT	OFF	PRE-AMP	ON	RF VR	MAX
AGC	FAST	IF SHIFT	Center	PROC	OFF
NB	OFF	DSP SLOPE	Center		

Front Panel

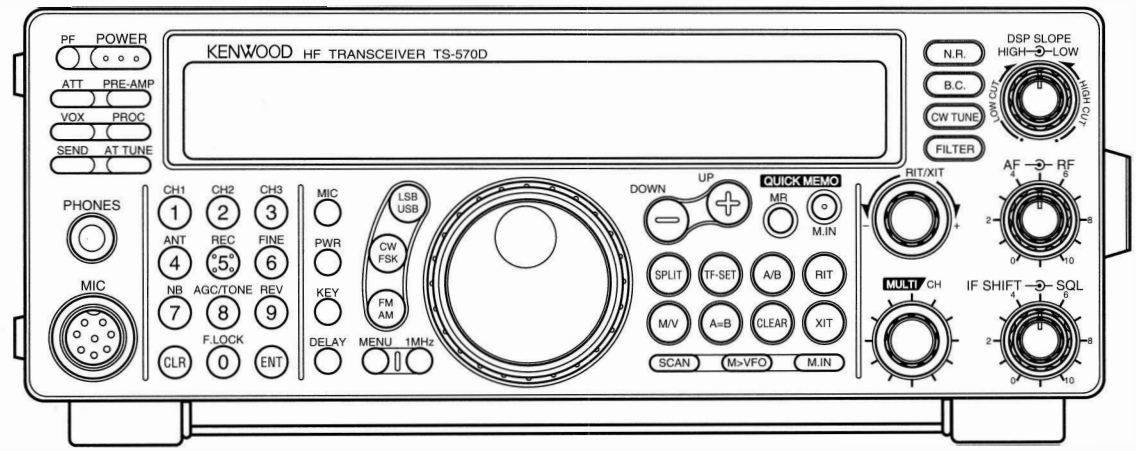

Rear Panel

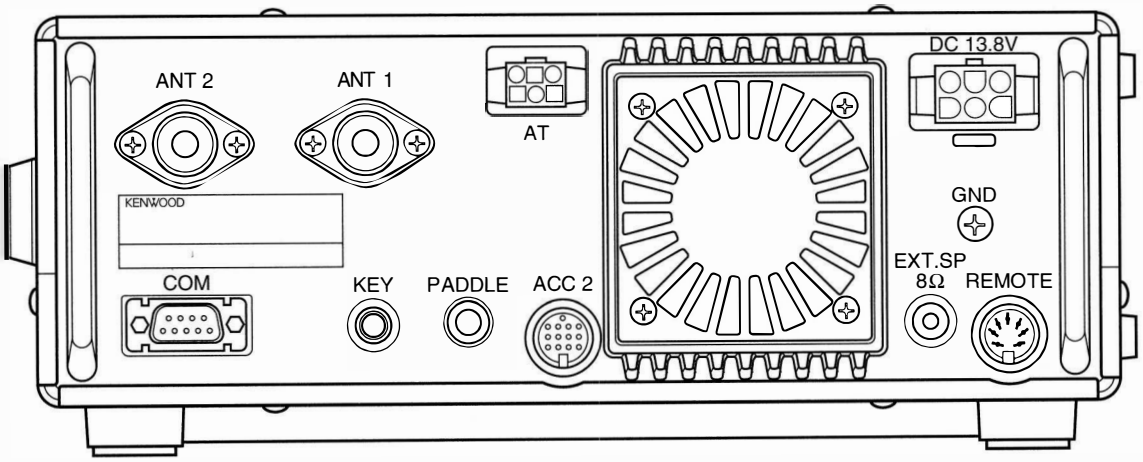

ADJUSTMENT

Service Jig

Jig set (A and B)
Parts No. : W05-0598-00

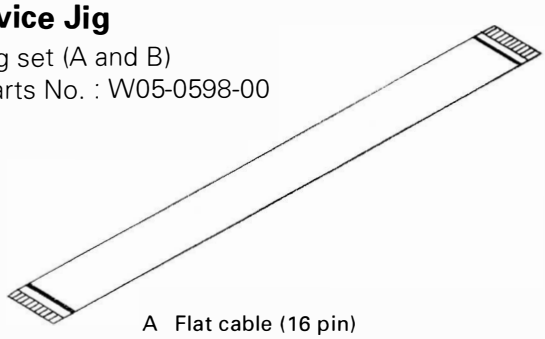

A Flat cable (16 pin)
(E37-0572-05)
About 17cm

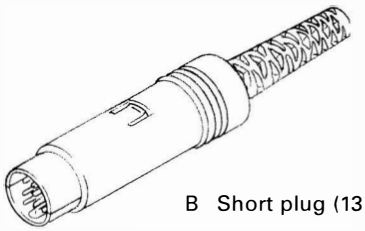

B Short plug (13 pin)

How to Use the Flat Cable

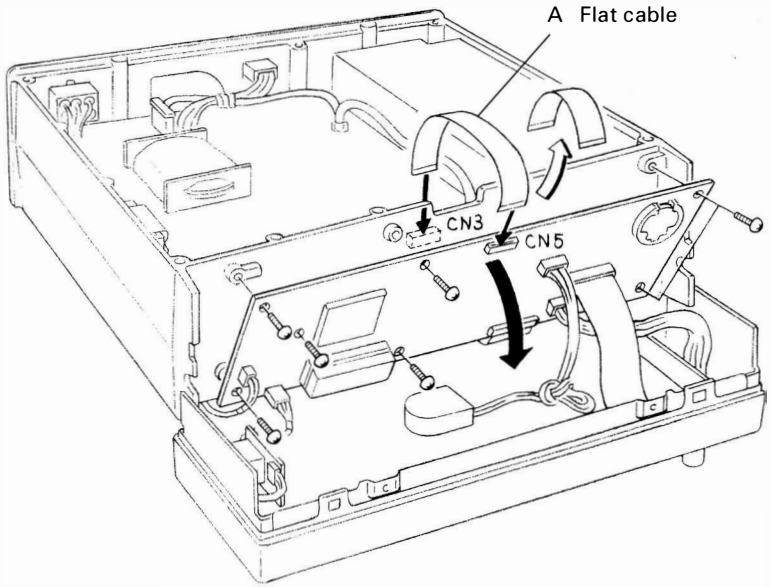

How to Use the Short Plug

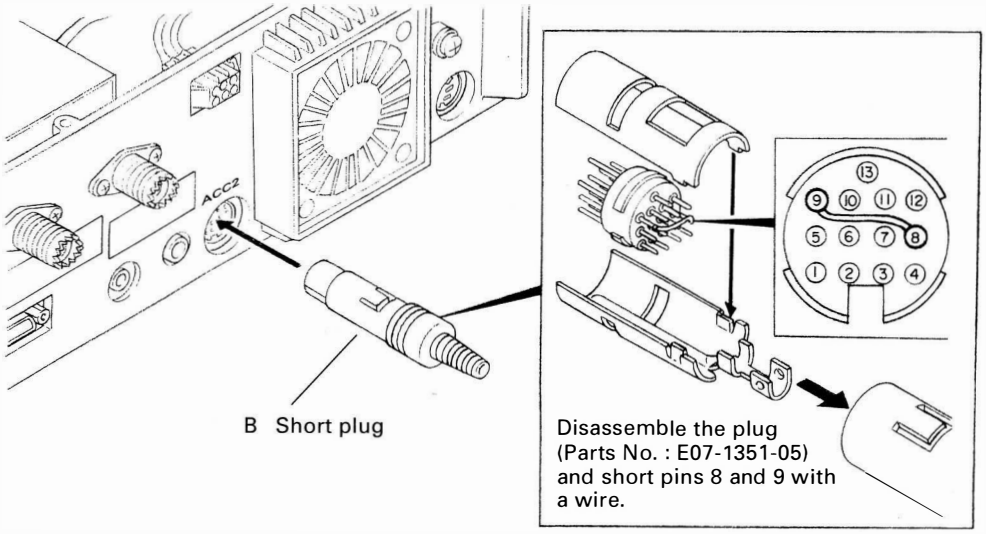

ADJUSTMENT

Service Adjustment Mode

■ Outline

1. The transceiver is adjusted by the normal method and by a method using the service adjustment mode (automatic adjustment).
2. There are adjustment items of menu numbers 00 to 51 in the service adjustment mode. All adjustment data are saved in the EEPROM.
3. When the service adjustment mode is entered, data is read from the EEPROM and placed in the CPU RAM, so it can be modified.
4. The EEPROM is updated only when data is written in Menu No. 51.

■ Operation Procedure

1) Entering the service adjustment mode

1. Before turning the power on, insert the adjustment jig into the ACC2 socket.
2. Hold down the [N.R.] key and [LSB/USB] key and turn the [POWER] switch on. The display (LCD) shows "ADJUST" and then the adjustment mode menu.
3. After "ADJUST" appears, remove the short plug from the ACC2. (The transmitter cannot be adjusted without removing it.)

2) Menu number selection

When the [MULTE/CH] control is turned, the menu number changes.

3) Changing the setting data

Setting data can be changed by using the [UP] or [DOWN] key on the transceiver or the microphone.

4) Writing data

Press the [UP] or [DOWN] key on the transceiver or the microphone with MENU No.51 to write data.

5) Canceling the service adjustment mode

When the [CLR] key is pressed, the normal VFO mode display returns.

Notes:

1. The transceiver can transmit signals in the receiver adjustment mode. If a microphone is connected to the transceiver, take special care not to press the PTT key.
2. If the power is switched off during adjustment in the adjustment mode, the adjustment mode is canceled.

Service Adjustment Mode Menu

Menu No.	Function	Description
00	AGC	AGC reference voltage (14.1MHz USB)
01	ALC	ALC reference voltage (14.2MHz USB)
02	SSB SQL threshold	(14.1MHz USB)
03	S-meter (SSB)	Start level (S1) setting (14.1MHz USB)
04		S9 level setting (14.1MHz USB)
05		S9+60dB (full scale) level setting (14.1MHz USB)
06	FM SQL threshold	(29.1MHz FM)
07	S-meter (FM)	Start level (S1) setting (29.1MHz FM)
08		Full scale level setting (29.1MHz FM)
09~15	Not use	
16	SQL VR center	SQL VR center voltage reading (14.1MHz)
17	IF SHIFT center	IF SHIFT center voltage reading (14.1MHz)
18	100W protection setting	Read data at the 100W point on the RF meter (14.2MHz USB)
19	50W protection setting	Read data at the 50W point on the RF meter (14.2MHz USB)
20	25W protection setting	Read data at the 25W point on the RF meter (14.2MHz USB)
21	10W protection setting	Read data at the 10W point on the RF meter (14.2MHz USB)
22	5W protection setting	Read data at the 5W point on the RF meter (14.2MHz USB)
23	TGC setting	1.8MHz band (100W) (1.840MHz USB)
24		3.5MHz band (100W) (3.5MHz USB)
25		7MHz band (100W) (7.0MHz USB)
26		10MHz band (100W) (10.1MHz USB)
27		14MHz band (100W) (14.2MHz USB)
28		18MHz band (100W) (18.068MHz USB)
29		21MHz band (100W) (21.0MHz USB)
30		25MHz band (100W) (24.89MHz USB)
31		28MHz band (100W) (29.69MHz USB)

ADJUSTMENT

Menu No.	Function	Description
32	Not use	
33	TGC setting	14MHz band (50W) (14.2MHz USB)
34		14MHz band (25W) (14.2MHz USB)
35		14MHz band (10W) (14.2MHz USB)
36		14MHz band (5W) (14.2MHz USB)
37	ALC meter voltage reading	Start level setting (14.2MHz USB)
38		Maximum zone level setting (14.2MHz USB)
39	CAR level setting	CW (14.2MHz CW)
40		AM (14.2MHz AM)
41	FM maximum deviation	(29.69MHz FM)
42	SSB CAR shift compensation	USB (14.2MHz USB)
43		LSB (14.2MHz LSB)
44	SSB CAR suppression	USB (14.2MHz USB)
45		LSB (14.2MHz LSB)
46	SWR protection voltage setting	(14.2MHz CW)
47	HF band SWR=3.0 reading	For display in TX (1.840MHz CW)
48	Not use	
49	Check sum display	Sum of ROM's data (14.1MHz)
50	All LCD segments light	Display checking
51	Writing into EEPROM	

Display Check

Item	Condition	Measurement			Adjustment			Specifications/Remarks
		Test-equipment	Unit	Terminal	Unit	Parts	Method	
1. All reset	1) DC IN : DC 13.8V Pushing [A=B] key down, [POWER] : ON				Front panel	LCD	After displaying "HELLO", the display is reset as follows; DISP f. : 14.000.00 MODE : USB ANT : 1 METER : ALC PRE AMP	Display should be normal. Should be at the reset frequency.
2. All LCD segments light	1) Menu No. : 50	ACC2 Jig (Short plug)					Check	All LCD segments light.

PLL Section

Item	Condition	Measurement			Adjustment			Specifications/Remarks
		Test-equipment	Unit	Terminal	Unit	Parts	Method	
1. Reference oscillation (20MHz)	1) Display f. : 14.750MHz MODE : AM	f. counter	TX-RX (PLL)	TP505	TX-RX (PLL)	TC500	20.000.000MHz	±20Hz
2. 60MHz	1) Display f. : 14.750MHz MODE : AM	Oscilloscope		TP506		L529 L530	Repeat for MAX.	
3. 65MHz BPF	1) Display f. : 14.750MHz MODE : AM			TP503		L533 L534 L535	Repeaat for MAX.	

ADJUSTMENT

Item	Condition	Measurement			Adjustment			Specifications/Remarks
		Test-equipment	Unit	Terminal	Unit	Parts	Method	
4. Lock voltage VCO1A	1) Display f. : 30kHz MODE : AM	DC V.M	TX-RX (PLL)	TP501	TX-RX (PLL)	TC502	2.0V	±0.05V
	2) Display f. : 10.980MHz						Check	6.5V or less
5. Lock voltage VCO1B	1) Display f. : 10.990MHz MODE : AM				TX-RX (PLL)	TC503	2.0V	±0.05V
	2) Display f. : 23.980MHz						Check	6.5V or less
6. Lock voltage VCO1C	1) Display f. : 23.990MHz MODE : AM				TX-RX (PLL)	TC504	2.0V	±0.05V
	2) Display f. : 29.990MHz						Check	6.5V or less
7. LO2 VCO2 voltage	1) Display f. : 14.100MHz MODE : AM			TP504			Check	3.0~6.0V
8. LO1 level	1) Display f. : 14.100MHz MODE : AM	RF V.M		CN503			Check	0~+3dBm
9. LO2 level	Measurement condition : 50Ω terminated			CN501				0~+4dBm
10. CAR level	1) Display f. : 14.100MHz MODE : AM	Oscilloscope		CN502			Check	1.0Vp-p±0.2

Receiver Section

Item	Condition	Measurement			Adjustment			Specifications/Remarks
		Test-equipment	Unit	Terminal	Unit	Parts	Method	
1. AGC voltage	1) Menu No. : 00 (14.100MHz USB)	DC V.M	TX-RX (RF)	TP2	Front panel	UP or DOWN key	2.9V	±0.03V
• Writing data : After item 1 has been adjusted; 1) Menu No. : 51 2) [UP] or [DOWN] key : Push once time Display "rEAdy" → "run" → "good" (If "nG" is displayed, enter data again.) 3) [CLR] key : Push once time.								
2. BPF	1) Display f. : 7.000MHz MODE : FM PRE AMP : ON Spectrum analyzer setting Center f. : 7.100MHz Frequency span : 2MHz Output : –20dBm XdB/DIV : 2dB RBW : 30kHz VBW : 10kHz	Tracking generator Spectrum analyzer	Rear panel TX-RX (RF)	ANT CN7	TX-RX (RF)	L20 L21 L22	Repeat adjustment 2 or 3 times until the level is maximized and the waveform becomes flat.	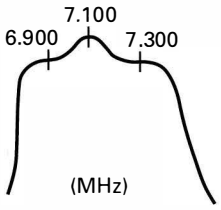
	2) Display f. : 14.000MHz Spectrum analyzer setting Center f. : 14.000MHz Frequency span : 5MHz					L29 L30 L31	Repeat adjustment 2 or 3 times until the level is maximized and the waveform becomes flat. Note : If dip point appear, first turn TC2 (RF) and adjust to L29,30,31.	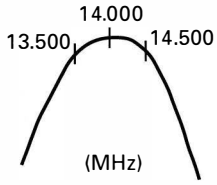

ADJUSTMENT

Item	Condition	Measurement			Adjustment			Specifications/Remarks
		Test-equipment	Unit	Terminal	Unit	Parts	Method	
3. RF AMP	1) Display f. : 22.000MHz MODE : FM PRE AMP : ON Spectrum analyzer setting Center f. : 26.000MHz Frequency span : 20MHz Output : –20dBm XdB/DIV : 2dB RBW : 30kHz VBW : 10kHz	Tracking generator Spectrum analyzer	Rear panel TX-RX (RF)	ANT CN7	TX-RX (RF)	L67 L68	Repeat adjustment 2 or 3 times until the level is maximized and within the range of waveform. Note : If dip point appear, first turn TC2 (RF) and adjust to L67,68.	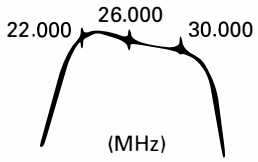
4. MCF (73MHz)	1) Display f. : 14.000MHz MODE : USB AGC : OFF Spectrum analyzer setting Center f. : 73.050MHz Frequency span : 70kHz ATT : 10dB Output : –20dBm XdB/DIV : 2dB RBW/VBW : 1kHz	Tracking generator Spectrum analyzer	TX-RX (RF)	CN3 CN4	TX-RX (RF)	L45 L54 L50 L51 L111	Repeat adjustment 2 or 3 times until the level is maximized and the waveform becomes flat. 1) Turn L45 and L54 to adjust to the 73.05MHz peak. (Repeat twice) 2) Turn L50, L51, and L111 to make a symmetrical waveform. 3) Make the wave-form flat using L45 and L54.	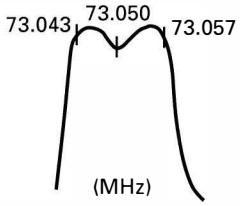
5. Trap initialize setting **E,E2,E3**	1) Set the TC2 position as shown right.				TX-RX (RF)	TC2	Turn TC2 180° from the default position.	TC2 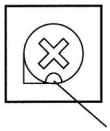 Face the concave part of the knob downwards.
6. IF AMP	1) Display f. : 14.100MHz MODE : USB AGC : FAST PRE AMP : ON AF output : 0.63V/8Ω SSG frequency : 14.101MHz SSG output : –113dBm	SSG AF V.M Oscilloscope DM. SP	Rear panel	ANT EXT.SP	TX-RX (RF)	L55 L56 L61 IC15's L1,L2	Repeat adjustment 2 or 3 times until the AF output is maximized.	
7. RX MIX balance	1) Display f. : 100kHz MODE : USB PRE AMP : ON SSG output : OFF					VR1	Noise MIN	
8. IF GAIN	1) Display f. : 14.100MHz MODE : USB AGC : FAST PRE AMP : ON SSG frequency : 14.101MHz SSG output : –105dBm				Front panel	AF VR	AF output : 0.63V	
	2) SSG output : –115dBm				TX-RX (RF)	IC15's VR1	AF output : 0.4V	±0.05V
	3) SSG output : –105dBm						Check	AF output : 0.63V±0.05V
9. Trap **E,E2,E3**	1) Display f. : 15.200MHz MODE : USB AGC : FAST PRE AMP : ON SSG frequency : 15.201MHz SSG output : –113dBm				TX-RX (RF)	TC2	AF output : MIN	There must be a dip point.
	2) Display f. : 11.700MHz SSG frequency : 11.701MHz					TC1		

ADJUSTMENT

Item	Condition	Measurement			Adjustment			Specifications/Remarks
		Test-equipment	Unit	Terminal	Unit	Parts	Method	
10. NB	1) Display f. : 14.100MHz MODE : USB AGC : FAST PRE AMP : ON SSG frequency : 14.101MHz SSG output : –103dBm	DC V.M SSG AF V.M Oscilloscope DM. SP	TX-RX (PLL) Rear panel	TP801 ANT EXT.SP	TX-RX (PLL)	L802 L803	Voltage MIN	
	2) [NB] key : ON/OFF	Noise G.		ANT			Adjust output of noise generator to S1 and S9, and check each.	Noise should disappear when NB is ON.
• Item 11 to 16 below are adjusted in the adjustment mode. To terminate the adjustment menu in the middle, save your settings with Menu No. 51.								
11. SSB SQL threshold	1) Menu No. : 02 (14.100MHz USB) SSG output : OFF	SSG AF V.M Oscilloscope DM. SP	Rear panel	ANT EXT.SP	Front panel	UP or DOWN key	1 push	
12. SSB S-meter S1	1) Menu No. : 03 (14.100MHz USB) SSG frequency : 14.101MHz SSG output : –107dBm							
S9	2) Menu No. : 04 (14.100MHz USB) SSG output : –81dBm							
Full scale	3) Menu No. : 05 (14.100MHz USB) SSG output : –21dBm							
13. FM SQL threshold	1) Menu No. : 06 (29.100MHz FM) SSG frequency : 29.100MHz SSG output : OFF							
14. FM S-meter S1	1) Menu No. : 07 (29.100MHz FM) SSG frequency : 29.100MHz SSG output : –117dBm MOD : 1kHz/3kHz							
Full scale	2) Nenu No. : 08 (29.100MHz FM) SSG output : –95dBm MOD : 1kHz/3kHz							
15. SQL VR center voltage	1) Menu No. : 16 (14.100MHz USB) SSG frequency : Anything SSG output : OFF						SQL VR : Center 1 push	
16. IF SHIFT VR center voltage	1) Menu No. : 17 (14.100MHz USB) SSG frequency : Anything SSG output : OFF						IF SHIFT VR : Center 1 push	

• Writing data : After items 11 to 16 have been adjusted;
1) Menu No. : 51
2) [UP] or [DOWN] key : Push once time
3) [CLR] key : Push once time.

Display "rEAdy" → "run" → "good" (If "nG" is displayed, enter data again.)

ADJUSTMENT

Item	Condition	Measurement			Adjustment			Specifications/Remarks
		Test-equipment	Unit	Terminal	Unit	Parts	Method	
17. S/N	1) Display f. : Below AF VR : 0.63V/8Ω SSG frequency : Below However, USB : +1kHz LSB : –1kHz	SSG AF V.M Oscilloscope Distortion meter DM. SP	Rear panel	ANT EXT.SP				
	Frequency / MODE / SSG output / SSG MOD / DEV							
	550kHz / AM / –77dBm / 1kHz / 60%						S/N measurement	10dB or more
	1.550MHz / AM / –77dBm / 1kHz / 60%							
	1.800MHz / LSB / –119dBm / OFF / OFF						MAX sensitivity measurement	0.63V/8Ω or more
	3.550MHz / LSB / –119dBm / OFF / OFF							
	7.100MHz / LSB / –119dBm / OFF / OFF							
	10.100MHz / USB / –119dBm / OFF / OFF							
	14.100MHz / USB / –119dBm / OFF / OFF					←	PRE AMP : OFF	Sensitivity down 5~15dB.
	21.100MHz / USB / –119dBm / OFF / OFF							
	24.800MHz / USB / –123dBm / OFF / OFF							
	28.800MHz / USB / –123dBm / OFF / OFF							
	29.800MHz / FM / –119dBm / 1kHz / 3kHz					←	SINAD seisitivity	12dB SINAD or more measurement
18. ATT	1) Display f. : 14.300MHz MODE : USB AGC : FAST PRE AMP : ON SSG frequency : 14.301MHz SSG output : –113dBm	SSG AF V.M Oscilloscope DM. SP	Rear panel	ANT EXT.SP	Front panel	ATT key	1) Adjust the AF output to 1V. 2) 1 push the [ATT] key. 3) SSG output : –93dBm	AF output down. AF output : 1V±3dB
19. VS-3 (Option)	1) Connect the VS-3 to CN16 on the TX-RX unit. AF VR : MIN [PF] key : 1 push	VS-3	TX-RX (RF)	CN16	Front panel	PF key	1 push	The displayed frequency can be heard vocally.
20. DRU-3A (Option)	1) Connect the DRU-3A to CN17 on the TX-RX unit. Connect a microphone to the MIC jack. [REC] key : 1 push	DRU-3A Microphone	TX-RX (RF) Front panel	CN17 MIC	Front panel	CH1 key	Hold down [CH1], and talk into the microphone.	Can be recorded for about 15 seconds.
							Press the [CH1] key again.	The recorded voice must be played back.

Transmitter Section

Item	Condition	Measurement			Adjustment			Specifications/Remarks
		Test-equipment	Unit	Terminal	Unit	Parts	Method	
1. ALC voltage	1) Menu No. : 01 (14.100MHz USB) Transmit	DC V.M	TX-RX (RF)	TP1	Front panel	UP or DOWN key	2.7V	±0.03V
• Writing data : After item 1 has been adjusted; 1) Menu No. : 51 2) [UP] or [DOWN] key : Push once time 3) [CLR] key : Push once time. 4) [SPLIT] key : Push once time. Display "rEAdy" → "run" → "good" (If "nG" is displayed, enter data again.)								
2. Final idling current	1) Display f. : 14.200MHz MODE : USB Final unit VR1, 2 : MIN Transmit	DC. A	Rear panel	DC IN	Final		(First adjust VR1 and VR2 for minimum)=A	
						VR1	A+250mA	
						VR2	(A+250mA)+250mA	

ADJUSTMENT

Item	Condition	Measurement			Adjustment			Specifications/Remarks
		Test-equipment	Unit	Terminal	Unit	Parts	Method	
3. TX AMP	1) Display f. : 14.200MHz MODE : CW Connect to CN10 a 50Ω dummy load. Transmit	50Ω dummy Oscilloscope	TX-RX (RF)	CN10	TX-RX (RF)	L69,70 L71,72 L74,75 L76 VR3	Repeat 2 or 3 times for DRV output MAX	Reference value 2.5Vp-p or more
4. NULL	1) Display f. : 3.500MHz MODE : CW Transmit	Power meter DC V.M (Oscilloscope)	Rear panel Final	ANT CN12	Final	TC1	MIN	Reference value 0.5V or less
5. Power frequency characteristic	1) Initialize	Power meter	Rear panel	ANT	Final	VR3	Full counterclock-wide (VR MIN)	
	2) Menu No. : 18 (14.200MHz USB) Transmit				Front panel	UP or DOWN key	100W	±5.0W
	3) Writing data with Menu No. 51. [CLR] key : Push once time (Adjustment mode terminated)							
	4) Display f. : 29.699MHz MODE : CW Transmit				Final	VR3	Power MAX	95W or more
6. 14MHz TGC	1) Menu No. 27 (14.200MHz USB) Transmit	Power meter	Rear panel	ANT	Front panel	UP or DOWN key	Setting data : 050	
					TX-RX (RF)	VR9	100W	±3.0W
	2) Writing data with Menu No. 51.				Front panel	UP or DOWN key	1 push	
• Item 7 to 17 below are adjusted in the adjustment mode. To terminate the adjustment menu in the middle, save your settings with Menu No. 51.								
7. Power 100W	1) Menu No. : 18 (14.200MHz USB) Transmit	Power meter	Rear panel	ANT	Front panel	UP or DOWN key	100W	±5.0W
50W	2) Menu No. : 19 (14.200MHz USB) Transmit						50W	±2.5W
25W	3) Menu No. : 20 (14.200MHz USB) Transmit						25W	±1.0W
10W	4) Menu No. : 21 (14.200MHz USB) Transmit						10W	±1.0W
5W	5) Menu No. : 22 (14.200MHz USB) Transmit						5W	±1.0W
8. TGC 1.9MHz	1) Menu No. : 23 (1.840MHz USB) Transmit						100W **K,M2,E,E3** 10W **E2**	±5W **K,M2,E,E3** ±1.0W **E2**
3.5MHz	2) Menu No. : 24 (3.500MHz USB) Transmit						100W	±5W Note : Skip 14MHz
7.0MHz	3) Menu No. : 25 (7.00MHz USB) Transmit							
10MHz	4) Menu No. : 26 (10.100MHz USB) Transmit							

ADJUSTMENT

Item	Condition	Measurement			Adjustment			Specifications/Remarks
		Test-equipment	Unit	Terminal	Unit	Parts	Method	
8. TGC 18MHz	5) Menu No. : 28 (18.068MHz USB) Transmit	Power meter	Rear panel	ANT	Front panel	UP or DOWN key	100W	±5W
21MHz	6) Menu No. : 29 (21.000MHz USB) Transmit							
25MHz	7) Menu No. : 30 (24.890MHz USB) Transmit							
28MHz	8) Menu No. : 31 (29.690MHz USB) Transmit							
9. Power TGC 50W	1) Menu No. : 33 (14.200MHz USB) Transmit						50W	±2.5W
25W	2) Menu No. : 34 (14.200MHz USB) Transmit						25W	±1.0W
10W	3) Menu No. : 35 (14.200MHz USB) Transmit						10W	±1.0W
5W	4) Menu No. : 36 (14.200MHz USB) Transmit						5W	±1.0W
10. ALC meter Start point	1) Menu No. : 37 (14.200MHz USB) Transmit						1 push	
Zone MAX	2) Menu No. : 38 (14.200MHz USB) Transmit							
11. CW carrier level	1) Menu No. : 39 (14.200MHz CW) Transmit						ALC meter zone MAX	
12. AM carrier level	1) Menu No. : 40 (14.200MHz AM) Transmit							
13. FM MAX deviation	1) Menu No. : 41 (29.690MHz FM) Transmit	Power meter Linear detector					±4.5kHz According to the larger +, −.	±0.1kHz
14. SSB carrier point USB	1) Menu No. : 42 (14.200MHz USB) Transmit	Power meter Oscilloscope					Waveform cross	OK 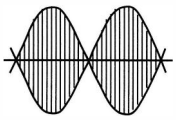
LSB	2) Menu No. : 43 (14.200Mhz LSB) Transmit							NG 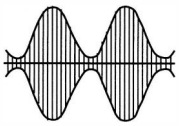

ADJUSTMENT

Item	Condition	Measurement			Adjustment			Specifications/Remarks
		Test-equipment	Unit	Terminal	Unit	Parts	Method	
15. SSB carrier suppression USB	1) Menu No. : 44 (14.200MHz USB) Transmit	Power meter Oscilloscope	Rear panel	ANT	TX-RX (RF)	VR4 VR5	Carrier level MIN	60dB or less (Repeat check both LSB and USB.)
LSB	2) Menu No. : 45 (14.200MHz LSB) Transmit							
16. SWR protection	1) Menu No. : 46 (14.200MHz CW) Transmit	150Ω dummy Through type power meter			Front panel	UP or DOWN key	40W	±1.0W
17. SWR meter (SWR : 3.0)	1) Menu No. : 47 (1.840MHz CW) Transmit	150Ω dummy					1 push	
• Writing data : After items 7 to 17 have been adjusted; 1) Menu No. : 51 2) [UP] or [DOWN] key : Push once time Display "rEAdy" → "run" → "good" (If "nG" is displayed, enter data again.) 3) [CLR] key : Push once time.								
18. Spurious	1) Display f. : 24.900MHz MODE : CW Transmit	Power meter Spectrum analyzer	Rear panel	ANT	TX-RX (RF)	VR2	±1.650MHz Spurious level MIN	60dB or less
19. AT amplitude	1) Display f. : 29.690MHz MODE : CW Transmit Power : 10W	Power meter Oscilloscope	Rear panel Final	ANT TP1	Final	VR4	Turn the VR to the point where the waveform on the oscilloscope changes from high to low. (Threshold point)	
20. AT phase	1) Display f. : 29.690MHz MODE : CW Transmit Power : 10W			TP2		TC2	Turn the VC to the point where the waveform on the oscilloscope changes from high to low.	
21. MIC sensitivity SSB	1) Display f. : 14.200MHz MODE : USB AG : 1kHz/5mV Transmit	Power meter AG VTVM	Rear panel Front panel	ANT MIC			Check	90W or more
FM	1) Display f. : 29.000MHz MODE : FM AG : 1kHz/3mV **E,E2,E3** 1kHz/5mV **K,M2** Transmit	Power meter Linear detector AG VTVM Oscilloscope	Rear panel Front panel	ANT MIC				DEV : ±2.7~3.3kHz
	2) AG : 1kHz/30mV **E,E2,E3** 1kHz/50mV **K,M2** Transmit							DEV : ±4.0~5.0kHz
22. Transmit frequency characteristic	1) Display f. : 14.200MHz MODE : USB/LSB AG : 1kHz/5mV 400Hz/5mV 2.6kHz/5mV Transmit	Power meter AG AF V.M	Rear panel Front panel	ANT MIC			Set AG to 1.0kHz and turn the [MULTI/CH] knob to set to 50W. Change the AG frequency and measure the difference between the power levels at 1.0kHz and at another frequency. Take a measurement for each USB and LSB.	Within 6dB

ADJUSTMENT

Adjustment Points (Top)

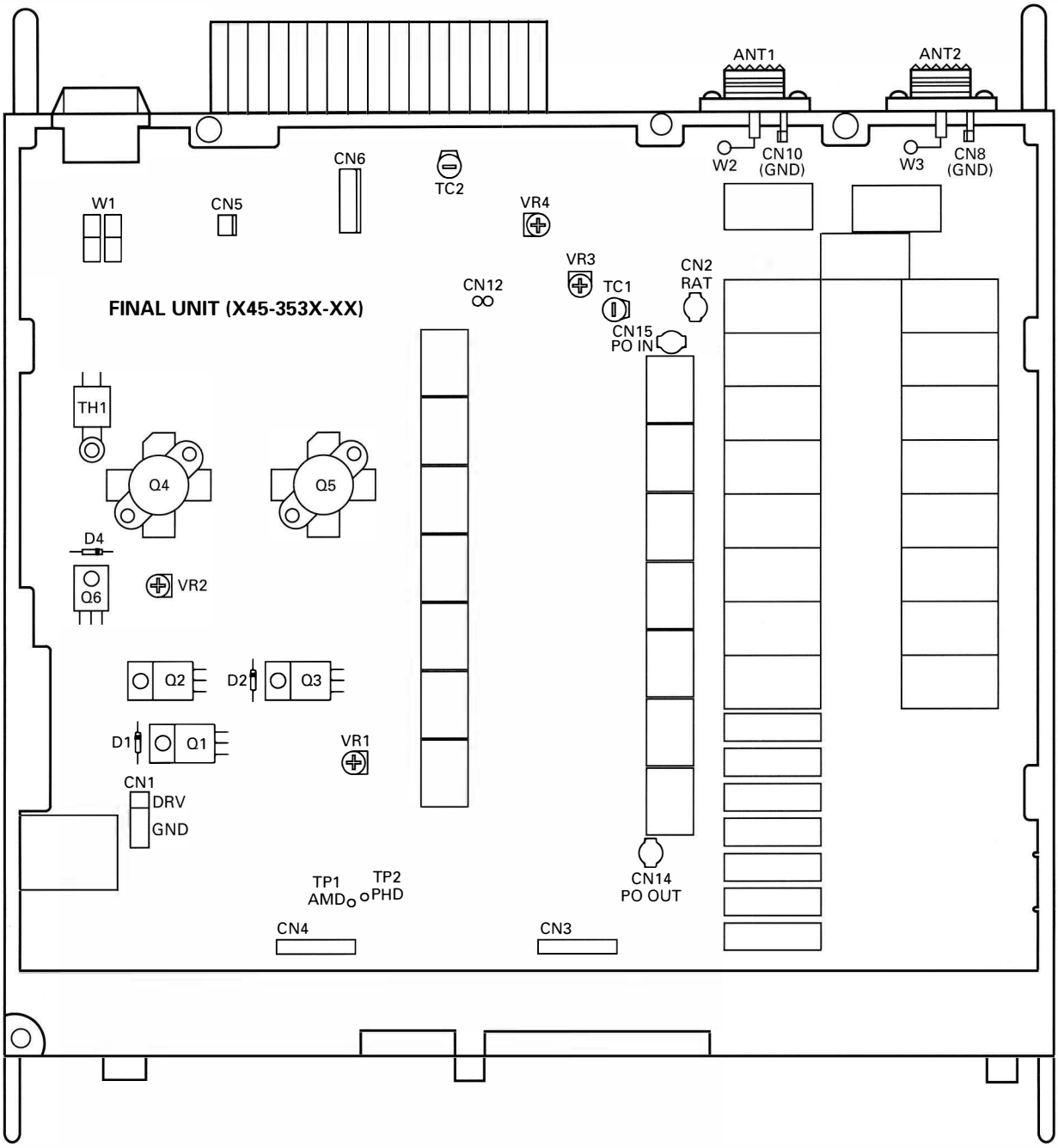

VR1,2 : Final idling current
VR3 : Power frequency characteristic
VR4 : AT amplitude
TC1 : NULL
TC2 : AT phase

ADJUSTMENT

Adjustment Points (Bottom)

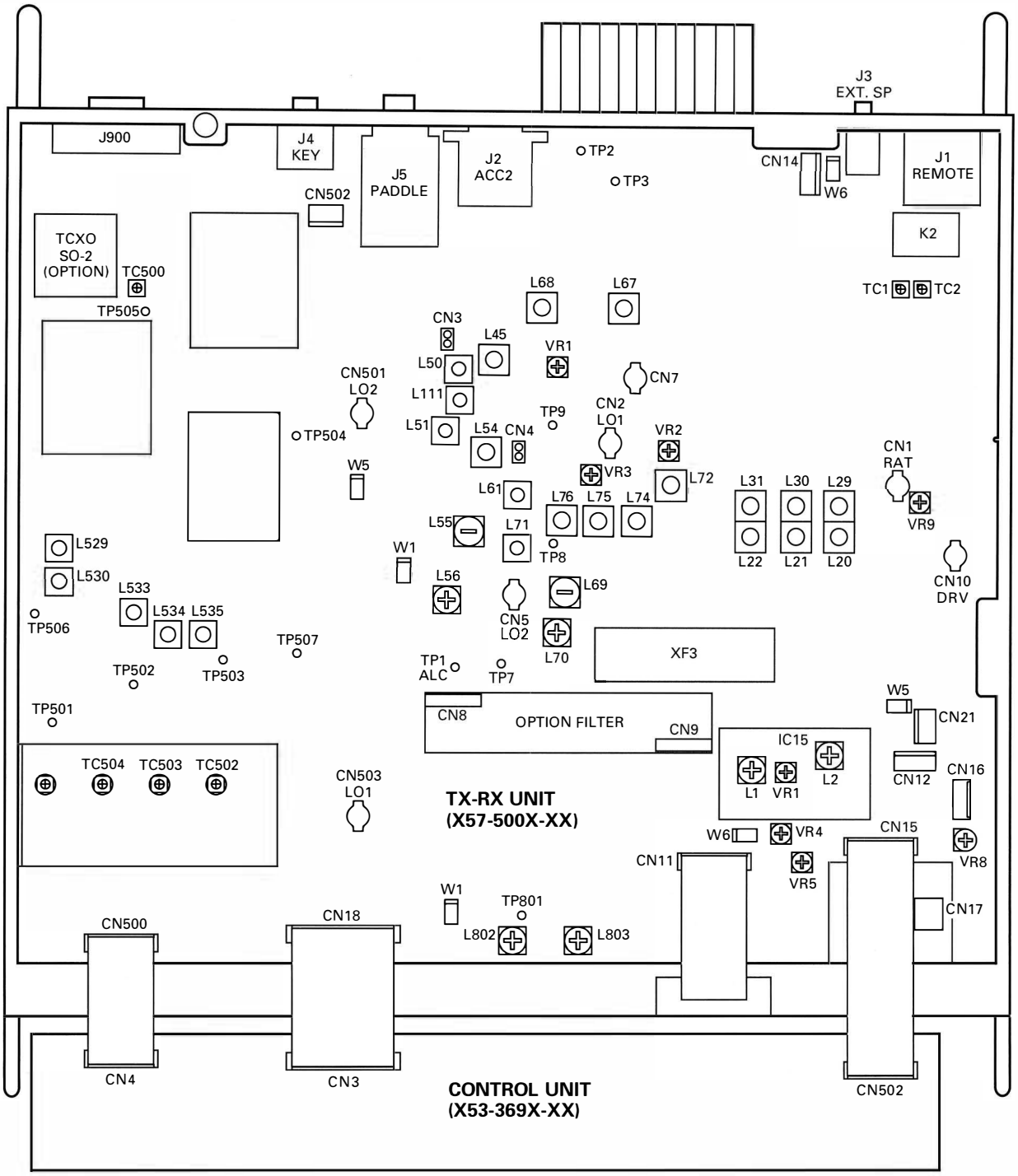

TC1,2 : Trap **E,E2,E3**
TC2 : Trap initialize setting **E,E2,E3**
TC500 : Reference oscillation
TC502 : Lock voltage (VCO1A)
TC503 : Lock voltage (VCO1B)
TC504 : Lock voltage (VCO1C)

L20~22,29~31 : BPF
L45,50,51,54,111 : MCF (73MHz)
L55,56,61 : IF AMP
L67,68 : RF AMP
L69~72,74~76 : TX AMP
L529,530 : 60MHz
L533~535 : 65MHz BPF
L802,803 : NB

VR1 : RX MIX balance
VR2 : Spurious
VR3 : TX AMP
VR4 : SSB carrier suppression (USB)
VR5 : SSB carrier suppression (LSB)
VR9 : 14MHz TGC
IC15's VR1 : IF GAIN
IC15's L1,2 : IF AMP
*VR8 : VS-3 voice output level

TERMINAL FUNCTION

CN No.	Pin No.	Name	I/O	Function
FINAL UNIT (X45-353X-XX)				
CN1	Coaxial	DRV	I	Drive input
CN2	Coaxial	RAT	O	RX signal output
CN3	1	GND	–	GND
	2	TT	O	AT-300 control signal
	3	TS	O	AT-300 control signal
	4	PSC	I	Power supply relay control signal
	5	BOVR	O	Over voltage detection signal
	6	THV	O	Thermal protect detection voltage
	7	PHD	O	Phase compare detection signal
	8	AMD	O	Amplitude compare detection signal
	9	14V	O	13.8V (Usually)
	10	14S	O	13.8V (When power switch on)
	11	10A	O	10V
	12	8A	O	8A
	13	UDA	I	Final unit serial data
	14	UCK	I	Final unit serial clock
	15	FEN	I	Final unit enable
	16	GND	–	GND
CN4	1	GND	–	GND
	2	GND	–	GND
	3	SPG	–	Speaker GND
	4	SP	I	Speaker input
	5	14AG	–	AF amplifier GND
	6	14AF	O	AF amplifier 14V
	7	14S	O	14V when power switch on
	8	14S	O	14V when power switch on
	9	8A	O	Analog 8V
	10	8A	O	Analog 8V
	11	5A	O	Analog 5V
	12	TXB	I	TX 8V
	13	VSF	O	Forward waveform detection voltage
	14	VSR	O	Relfected waveform detection voltage
	15	GND	–	GND
	16	GND	–	GND
CN5	1	FAN+		Fan motor drive +
	2	FAN–		Fan motor drive –
CN6	1	14S	O	13.8V
	2	AGND	–	Analog GND
	3	TT	O	AT-300 control
	4	TS	I	AT-300 control
	5	GND	–	GND
CN13	1	SP	O	Speaker output
	2	SPG	–	Speaker GND
CN14	Coaxial		O	Filter detection circuit (Relay)
CN15	Coaxial		I	Filter detection circuit (Relay)
CONTROL UNIT (X53-369X-XX)				
CN1	1	GND	–	GND
	2	NC		NC
	3	SS	I	Standby switch
	4	MD	I	MIC down signal
	5	MU	I	MIC up signal
	6	BLANK	O	LED goes off control signal
	7	8A	O	MIC 8V
	8	GND	–	GND
	9	5A	O	5V
	10	LDA	O	LCD serial data
	11	LCK	O	LCD serial clock
	12	LEN1	O	LCD enable (IC1)
	13	LEN2	O	LCD enable (IC2)
	14	LEN3	O	LCD enable (IC3)
	15	K0	I	Key input 0
	16	K1	I	Key input 1
	17	K2	I	Key input 2
	18	K3	I	Key input 3
	19	5C	O	Usually 5V (For power switch)
	20	PSW	I	Power switch input signal
	21	CENA	I	MULTI/CH encoder pulse A
	22	CENB	I	MULTI/CH encoder pulse B
	23	RENA	I	RIT/XIT encoder pulse A
	24	RENB	I	RIT/XIT encoder pulse B
	25	PB	O	LCD lamp (10V)
	26	GND	–	GND
CN2	1	5A	O	Volume power supply (5V)
	2	VAF	I	AF VR analog voltage
	3	VRF	I	RF VR analog voltage
	4	VSFT	I	SHIFT VR analog voltage
	5	VSQL	I	SQL VR analog voltage
	6	VHC	I	HC VR analog voltage
	7	VLC	I	LC VR analog voltage
	8	GND	–	GND
CN3	1	TXC	O	TX control signal
	2	NC		NC
	3	CKY	O	Keying signal
	4	KEY	I	Key down signal
	5	KYS	I	Key jack judgement signal
	6	PKS	I	Standby switch when PKD input
	7	RCK	O	TX-RX unit serial clock
	8	RDA	O	TX-RX unit serial data
	9	REN1	O	TX-RX unit IC11 enable
	10	NC		NC
	11	VEN	O	TX-RX unit IC6 enable
	12	SS	I	Standby switch
	13	ALM	I	ALC meter input
	14	SM	I	S-meter input
	15	VSFM	I	Forward waveform detection voltage
	16	VSRM	I	Reflected waveform detection voltage
	17	REN2	O	TX-RX unit IC14 enable
	18	TXD	I	RX deta from personal computer
	19	RXD	O	TX data to personal computer
	20	CTS	O	Data transmit inhibit signal to personal computer
	21	RTS	I	Data transmit inhibit signal from personal computer
	22	5C	O	Usually 5V
	23	AMU	O	AF mute signal
	24	DOT	I	Electronic kyer dot signal
	25	DASH	I	Electronic keyer dash signal
	26	GND	–	GND
CN4	1	GND	–	GND
	2	VCS	O	VS-3 voice synthesize start signal
	3	NAR	I	"H" : Data input enable to VS-3
	4	RST	O	VS-3 reset signal
	5	FSQL	I	FM SQL signal
	6	NC		NC
	7	NC		NC
	8	GND	–	GND
	9	DEN2	O	DDS IC enable (CAR)
	10	DEN1	O	DDS IC enable (LO1)
	11	ULK	I	Unlock detection
	12	PEN2	O	PLL IC enable (LO2)
	13	PEN1	O	PLL IC enable (LO1)
	14	PDA	O	PLL serial data
	15	PCK	O	PLL serial clock
	16	GND	–	GND
CN5	1	GND	–	GND
	2	FEN	I	Final unit enable
	3	UCK	I	Final unit serial clock
	4	UDA	I	Final unit serial data

TERMINAL FUNCTION

CN No.	Pin No.	Name	I/O	Function
	5	8A	O	8A
	6	10A	O	LCD lamp 10V (Relay)
	7	14S	O	13.8V (When power switch on)
	8	14V	O	13.8V (Usually)
	9	AMD	I	Amplitude compare detection signal
	10	PHD	I	Phase compare detection signal
	11	THV	I	Thermal protect detection voltage
	12	BOVR	I	Over voltage detection signal
	13	PSC	O	Power supply relay control
	14	TS	I	AT-300 control signal
	15	TT	I	AT-300 control signal
	16	GND	–	GND
CN6	1	5D	O	5V (Encoder power supply)
	2	MENB	I	Main encoder pulse B
	3	MENA	I	Main encoder pulse A
	4	GND	–	GND
CN502	1	GND	–	GND
	2	NC		NC
	3	GND	–	GND
	4	MOD/ANO	O/I	Modulation output/RX AF input
	5	BIAS	O	Bias voltage
	6	DET	I	Detection input
	7	GND	–	GND
	8	DRO	I	DRU playback signal input
	9	GND	–	GND
	10	DRM	O	DRU-3A MIC signal
	11	GND	–	GND
	12	ANI	O	TX signal output
	13	GND	–	GND
	14	DREN	O	DRU enable
	15	EOM	I	End of message signal (End : "H")
	16	GND	–	GND
CN503	1	MIC	I	MIC signal
	2	MSG	–	MIC GND
	3	MCG	–	GND
TX-RX UNIT (X57-500X-XX) : TX-RX				
CN1	Coaxial	RAT	I	RX signal input
CN2	Coaxial	LO1	I	LO1 input (73.08~103.05MHz)
CN3	1	IN	I	MCF adjustment signal input
	2	GND	–	GND
CN4	1	OUT	O	MCF adjustment signal output
	2	GND	–	GND
CN5	Coaxial	LO2	I	LO2 input (64.22MHz)
CN7	Coaxial		O	BPF adjustment signal output
CN8				Option filter
CN9				Option filter
CN10	Coaxial	DRV	O	Drive output
CN11	1	GND	–	GND
	2	GND	–	GND
	3	SPG	–	Speaker GND
	4	SP	O	Speaker output signal
	5	14AG	–	AF amplifier GND
	6	14AF	I	AF amplifier 14V
	7	14S	I	14V when power switch on
	8	14S	I	14V when power switch on
	9	8A	I	Analog 8V
	10	8A	I	Analog 8V
	11	5A	I	Analog 5V
	12	TXB	O	TX 8V
	13	VSF	I	Forward waveform detection voltage
	14	VSR	I	Reflected waveform detection voltage
	15	GND	–	GND
	16	GND	–	GND

CN No.	Pin No.	Name	I/O	Function
CN12	1	CAR	I	CAR input (8.83MHz)
	2	GND	–	GND
	3	NC		NC
CN14	1	PH1	O	Audio output for headphone
	2	PH2	I	Audio input when headphone through
	3	PHG	–	GND
CN15	1	GND	–	GND
	2	NC		NC
	3	GND	–	GND
	4	MOD/ANO	I/O	Modulation input/RX AF output
	5	BIAS	I	Bias voltage
	6	DET	O	Detection output
	7	GND	–	GND
	8	DRO	O	Relay
	9	GND	–	GND
	10	DRM	I	DRU-3A MIC signal input
	11	GND	–	GND
	12	ANI	O	TX signal input
	13	GND	–	GND
	14	DREN	I	Relay
	15	EOM	O	Relay
	16	GND	–	GND
CN16	1	VO	I	VS-3 voice signal input
	2	5C	O	VS-3 power supply (5V)
	3	E	–	GND
	4	NAR	I	"H" : Data input enable to VS-3
	5	RST	O	VS-3 reset signal
	6	VCS	O	VS-3 voice synthesize start signal
	7	VDT	O	VS-3 data
	8	VCK	O	VS-3 clock
CN17	1	GND	–	GND
	2	DRMG	–	DRU-3A MIC GND
	3	DRM	O	DRU-3A MIC signal
	4	DRO	I	DRU playback signal
	5	5C	O	DRU power supply (5V)
	6	GND	–	GND
	7	EOM	I	End of message signal (End : "H")
	8	OVF	I	Overflow signal (Overflow : "L")
	9	DREN	O	DRU enable
	10	SD	O	DRU serial data
	11	SCK	O	DRU clock
CN18	1	TXC	I	TX control signal
	2	NC		NC
	3	CKY	I	Keying signal
	4	KEY	O	Key down signal
	5	KYS	O	Key jack judgement signal
	6	PKS	O	Standby switch when PKD input
	7	RCK	I	TX-RX unit serial clock
	8	RDA	I	TX-RX unit serial data
	9	REN1	I	TX-RX unit IC11 enable
	10	NC		NC
	11	VEN	I	TX-RX unit IC6 enable
	12	SS	O	Standby switch
	13	ALM	O	ALC meter output
	14	SM	O	S-meter output
	15	VSFM	O	Forward waveform detection voltage
	16	VSRM	O	Reflected waveform detection voltage
	17	REN2	I	TX-RX unit IC14 enable
	18	TXD	O	RX data from personal computer (Relay)
	19	RXD	I	TX data to personal computer (Relay)
	20	CTS	I	Data transmit inhibit signal to personal computer (Relay)
	21	RTS	O	Data transmit inhibit signal from personal computer (Relay)
	22	5C	I	Usually 5V
	23	AMU	I	AF mute signal

TERMINAL FUNCTION

CN No.	Pin No.	Name	I/O	Function
	24	DOT	O	Electronic keyer dot signal
	25	DASH	O	Electronic keyer dash signal
	26	GND	–	GND
CN19				Short jumper for medium frequency band ATT selection
CN20				Short jumper for medium frequency band ATT selection
CN21	1	AF	I	Audio input
	2	GND	–	GND
W1	1	NBI		NB IF signal (8.83MHz)
	2	NBG		NB IF signal GND
W5	1	FMM		FM modulation MIC signal
	2	FMG		FM modulation MIC signal GND
W6	1	SP		Speaker signal
	2	SPG		Speaker signal GND
J1	1	SPO	O	Speaker signal
	2	COM		External equipment control relay common terminal
	3	SS	I	Standby switch
	4	MKE		External equipment control relay close terminal
	5	BRK		External equipment control relay open terminal
	6	ALC	I	External ALC input
	7	RL	O	TX 14V output
J2	1	NC		NC
	2	RTK	I	RTTY signal
	3	ANO	O	RX AF output
	4	ANOG		RX AF output GND
	5	PSQ	O	Squelch control output
	6	SM	O	S-meter output
	7	NC		NC
	8	GND	–	GND
	9	PKS	I	Standby switch when PKD input
	10	NC		NC
	11	PKD	I	TX signal input
	12	GND	–	GND
	13	SS	I	Standby switch
J3	1			External speaker GND
	2		O	External speaker audio output
	3		I	Audio input when external speaker disconnect
J4	1	GND	–	GND
	2	GND	–	GND
	3	KYS	I	Key jack judgement signal
	4	NC		NC
	5	KEY	I	Key down signal
J5	1	GND	–	GND
	2	NC		NC
	3	NC		NC
	4	NC		NC
	5	DASH	I	Electronic keyer dash signal
	6	DOT	I	Electronic keyer dot signal
	7	NC		NC
	8	NC		NC
	9	NC		NC
	10	KEY	I	Key down signal
	11	KYS	I	Key jack judgement signal
TX-RX UNIT (X57-500X-XX) : PLL				
CN500	1	GND	–	GND
	2	PCK	I	PLL serial clock
	3	PDA	I	PLL serial data
	4	PEN1	I	PLL IC enable (LO1)
	5	PEN2	I	PLL IC enable (LO2)
	6	ULK	O	Unlock detection output
	7	DEN1	I	DDS IC enable (LO1)
	8	DEN2	I	DDS IC enable (CAR)
	9	GND	–	GND
	10	NC		NC
	11	NC		NC
	12	FSQL	O	FM SQL signal
	13	RST	I	VS-3 reset signal
	14	NAR	O	"H" : Data input enbale to VS-3
	15	VCS	I	VS-3 voice synthesize start signal
	16	GND	–	GND
CN501	Coaxial	LO2	O	LO2 output
CN502	1	CAR	O	CAR output
	2	GND	–	GND
CN503	Coaxial	LO1	O	LO1 output
J900	1	GND	–	GND
	2	NC		NC
	3	TXD	I	RX data from personal computer
	4	RXD	O	TX data from TS-570
	5	NC		NC
	6	NC		NC
	7	CTS	O	Data transmit inhibit signal from TS-570
	8	RTS	I	Data transmit inhibit signal from personal computer
	9	NC		NC
LCD ASSY (B38-0765-05)				
CN1	1	GND	–	GND
	2	PB	I	LCD lamp (10V)
	3	RENB	O	RIT/XIT encoder pulse B
	4	RENA	O	RIT/XIT encoder pulse A
	5	CENB	O	MULTI/CH encoder pulse B
	6	CENA	O	MULTI/CH encoder pulse A
	7	PSW	O	Power switch output signal
	8	5C	I	Usually 5V (For power switch)
	9	K3	O	Key output 3
	10	K2	O	Key output 2
	11	K1	O	Key output 1
	12	K0	O	key output 0
	13	LEN3	I	LCD enable (IC3)
	14	LEN2	I	LCD enable (IC2)
	15	LEN1	I	LCD enable (IC1)
	16	LCK	I	LCD serial clock
	17	LDA	I	LCD serial data
	18	5A	I	5V
	19	GND	–	GND
	20	8A	I	MIC 8V
	21	BLANK	I	LED goes off control signal
	22	MU	O	MIC up signal
	23	MD	O	MIC down signal
	24	SS	O	Standby switch
	25	NC		NC
	26	GND	–	GND
CN2	1	MIC	O	MIC signal output
	2	MSG		MIC GND
	3	MCG		GND
J1	1	MIC	I	MIC signal input
	2	SS	I	Standby switch
	3	MD	I	MIC down signal
	4	MU	I	MIC up signal
	5	8M	O	MIC 8V
	6	NC		NC
	7	MSG		MIC GND
	8	MCG		GND

PC BOARD

LCD ASSY (B38-0765-05)
Component side view

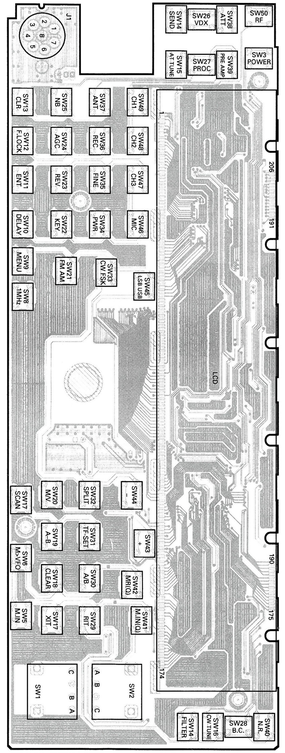

LCD ASSY (B38-0765-05)
Foil side view

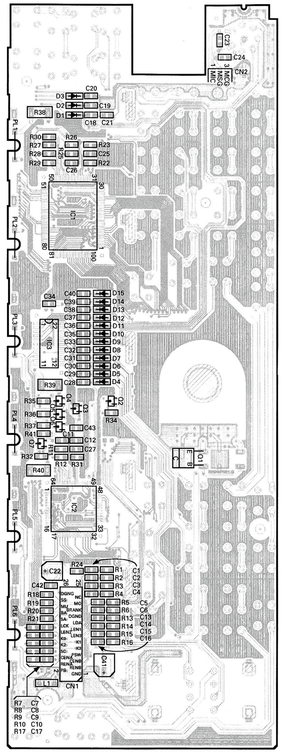

LCD ASSY (B38-0765-05)

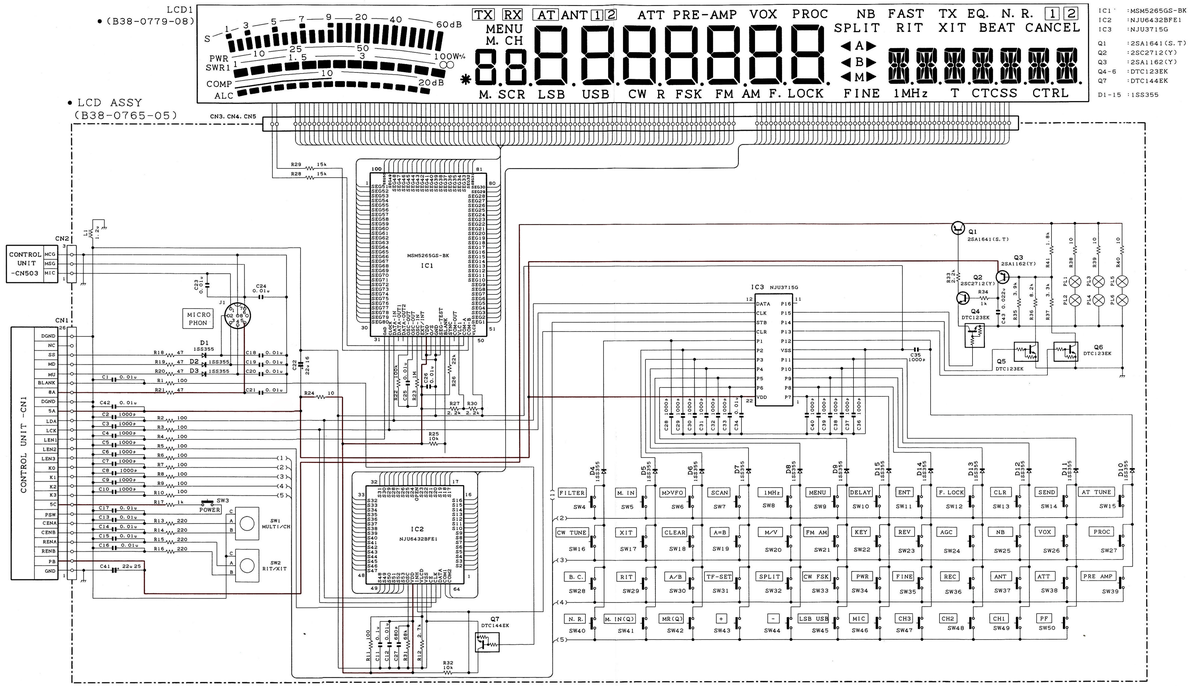

FINAL UNIT (X45-353X-)
0-10 : K,M2 2-71 : E,E2,
Component side view

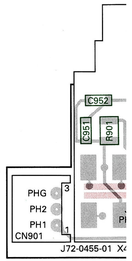

TX-RX UNIT (X57-500X-
0-10 : K,M2 2-71 : E,E2,
Component side view

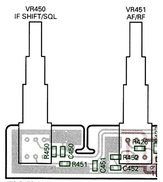

Component side
Foil side

TS-570D PC BOARD VIEWS

FINAL UNIT (X45-353X-XX) (A/2) Component side view 0-10 : K,M2 2-71 : E,E2,E3

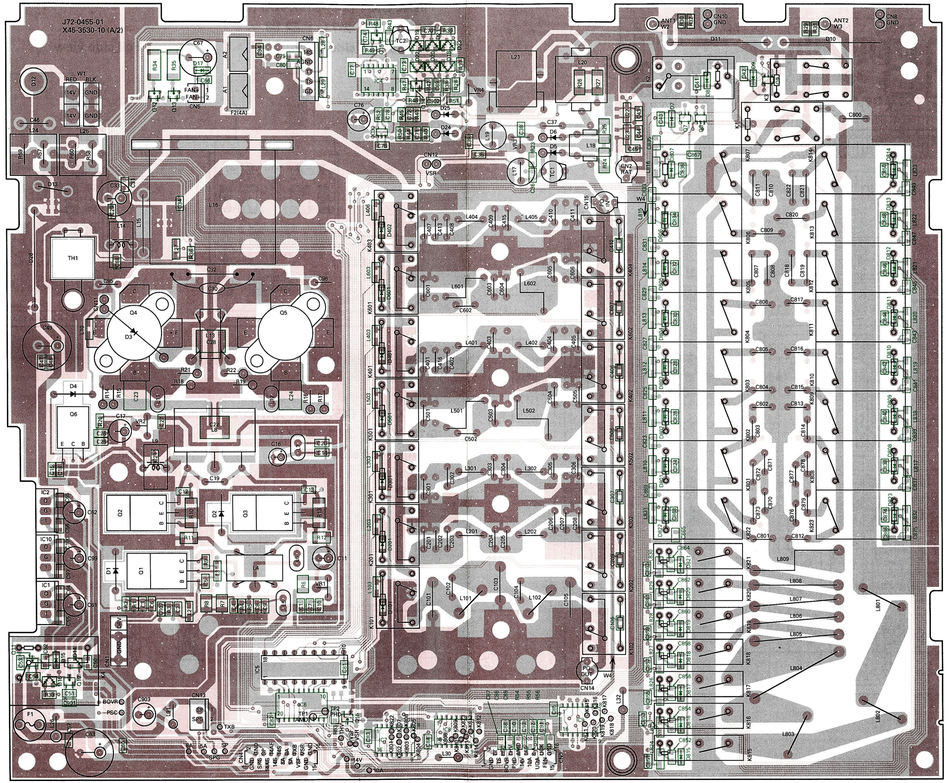

FINAL UNIT (X45-353X-XX) (A/2) Foil side view 0-10 : K,M2 2-71 : E,E2,E3

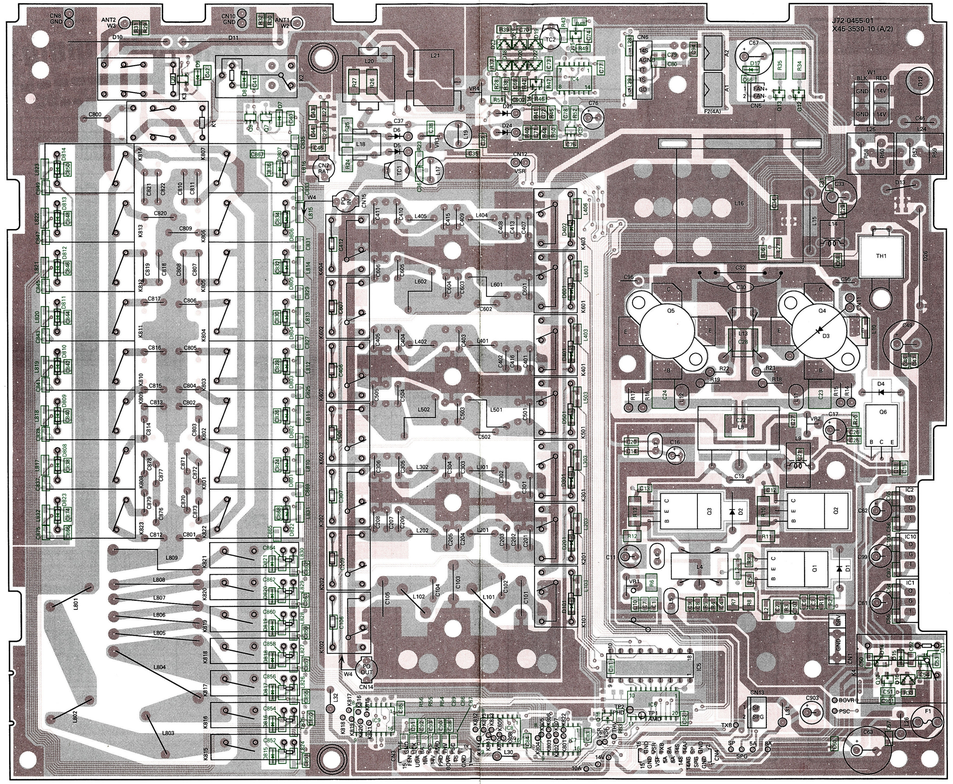

Component side
Foil side

FINAL UNIT (X45-353X-XX) 0-10 : K,M2   2-71 : E,E2,E3

CIRCUIT DIAGRAM TS-570D

		C401	C402	C403	C404	C405	C406	C409	C413	C415	C416	D401	K401	K402	L24	L25	L401	L402	L403	R57	R58	R59	R60	T401, 402
0-10	K, M2	-	-	-	-	-	-	180p	5p	120p	-	-	-	-	-	-	-	-	-	R92-2569-05	R92-2569-05	R92-2569-05	R92-2569-05	-
2-71	E, E2, E3	180p	47p	270p	150p	150p	0.01u	330p	-	-	5p	LFB01	S54-1420-05	S54-1420-05	L79-0558-05	L79-0558-05	L39-1221-05	L39-1220-05	L40-1015-48	-	-	-	-	L92-0108-05

D1 :MA27T-B
D2-4 :MA27-B
D5, 6, 24, 25 :1SS101
D7-9, 15, 17, 101, 201, 301, 401, 402, 501, 601, 801-823 :LFB01
D10, 11, 26 :DSA301LA
D12 :SG-5L(R)
D13 :ERZ-M10DK220
D14 :02CZ18(X, Y)
D16 :DAN202K
D18, 19, 20-23 :1SS226
Q1 :2SC1971
Q2, 3 :2SC3133
Q4, 5 :2SC2879
Q6 :2SC3421(Y)
Q7-9 :FMC2
Q10, 16 :DTC114EK
Q11 :DTC143TK
Q12, 13 :DTD123EK
Q14, 15 :2SC2714(Y)
IC1 :TA7805S
IC2 :TA7808S
IC3 :TA75S393F
IC4 :SN74S74NS
IC5 :M54562P
IC6 :NJU3714G
IC7-9 :UPD6345GS
IC10 :TA7810S

TS-570D PC BOARD VIEWS

CONTROL UNIT (X53-369X-XX) Component side view 0-10 : K 0-21 : M2 2-71 : E 2-72 : E2 2-73 : E3

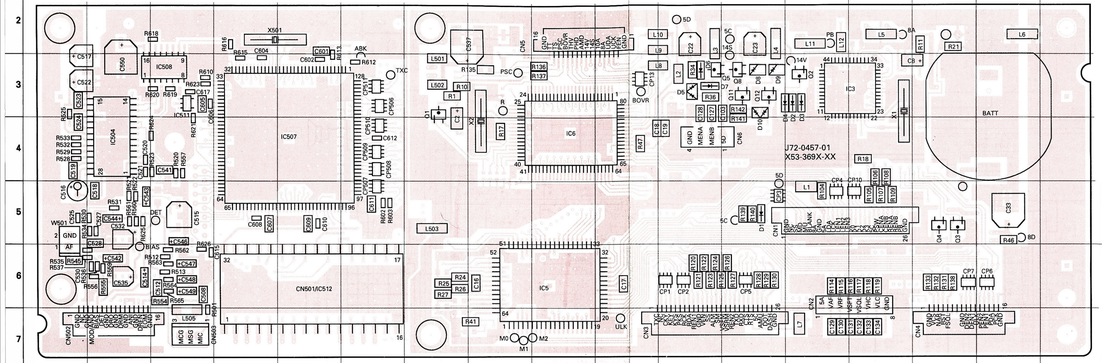

Ref. No.	Address	Ref. No.	Address
IC3	3M	Q8	3L
IC5	6I	Q11	3L
IC6	4I	Q12	3L
IC504	4B	D1	5L
IC507	4E	D2	3M
IC508	3C	D3	3M
IC511	3C	D4	3M
IC512	6E	D5	3K
Q1	3G	D6	3K
Q2	3M	D7	3K
Q3	5O	D8	3L
Q4	5O	D9	3L
Q5	3K	D10	3L

Component side
Pattern 1
Pattern 2
Pattern 3
Pattern 4
Foil side

CONTROL UNIT (X53-369X-XX) Component side view + Foil side 0-10 : K 0-21 : M2 2-71 : E 2-72 : E2 2-73 : E3

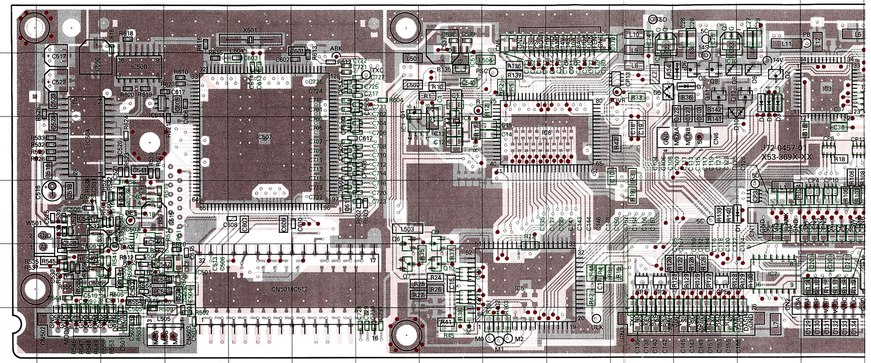

CONTROL UNIT (X53-369X-XX) Foil side view 0-10 : K 0-21 : M2 2-71 : E 2-72 : E2 2-73 : E3

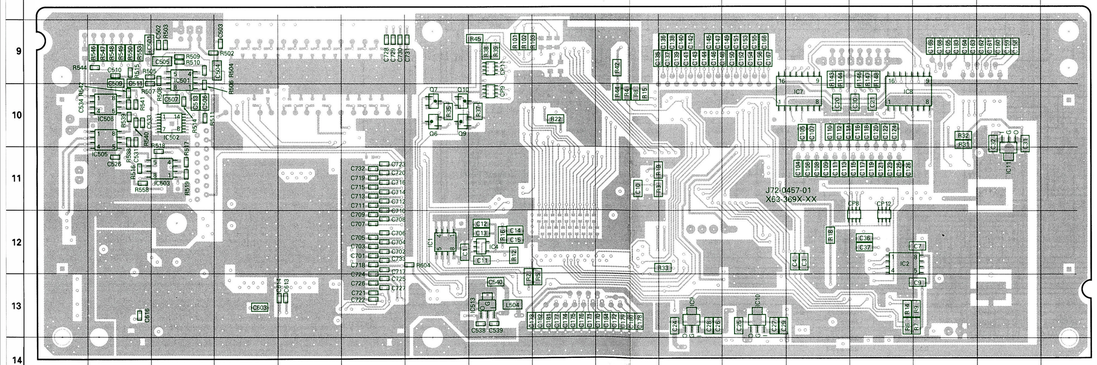

Ref. No.	Address	Ref. No.	Address
IC1	12G	IC502	10C
IC2	12N	IC503	11C
IC4	12H	IC505	10B
IC7	10M	IC506	10B
IC8	10N	IC513	13H
IC9	13K	D6	10G
IC10	13L	D7	10G
IC11	11P	D9	10G
IC501	9C	D10	10G

Component side
Pattern 1
Pattern 2
Pattern 3
Pattern 4
Foil side

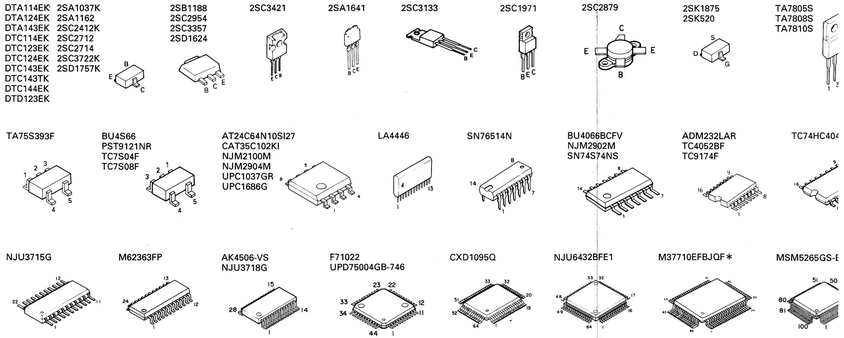

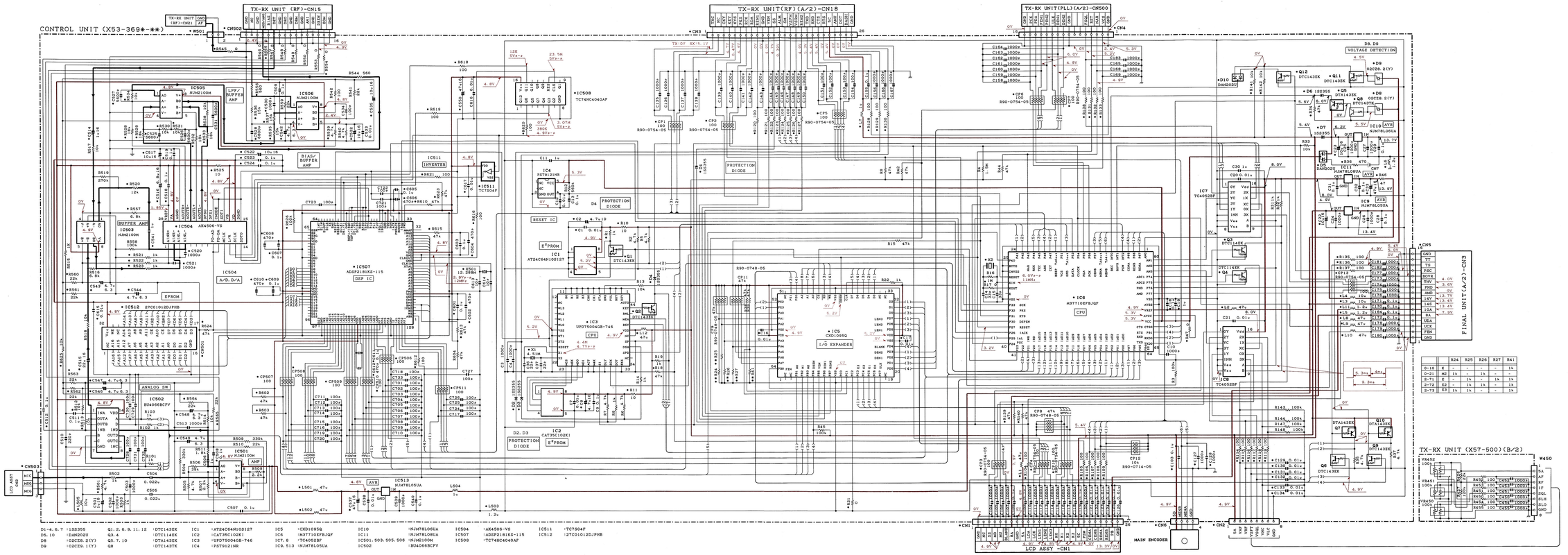

	R24	R25	R26	R27	R41
0-10	K	-	-	-	1k
0-21	M2	1k	-	1k	-
2-71	E	-	1k	-	1k
2-72	E2	-	1k	1k	1k
2-73	E3	1k	1k	-	1k

TS-570D PC BOARD VIEWS

TX-RX UNIT (X57-500X-XX) (A/2) Component side view 0-10 : K,M2 2-71 : E,E2,E3

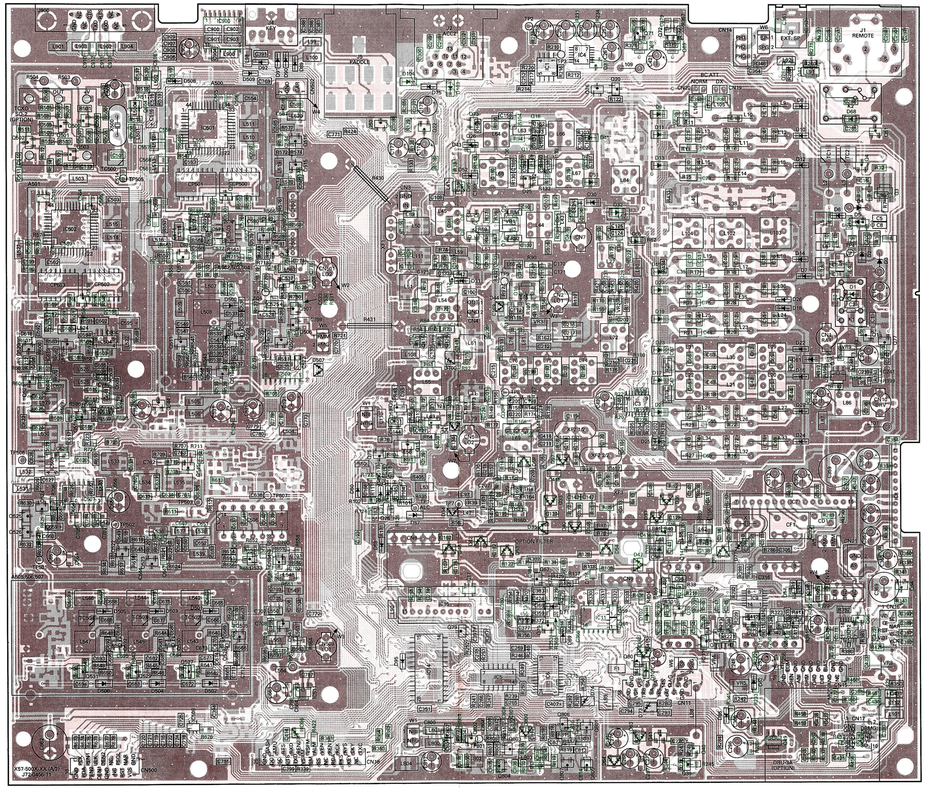

TX-RX UNIT (X57-500X-XX) (A/2) Foil side view 0-10 : K,M2 2-71 : E,E2,E3

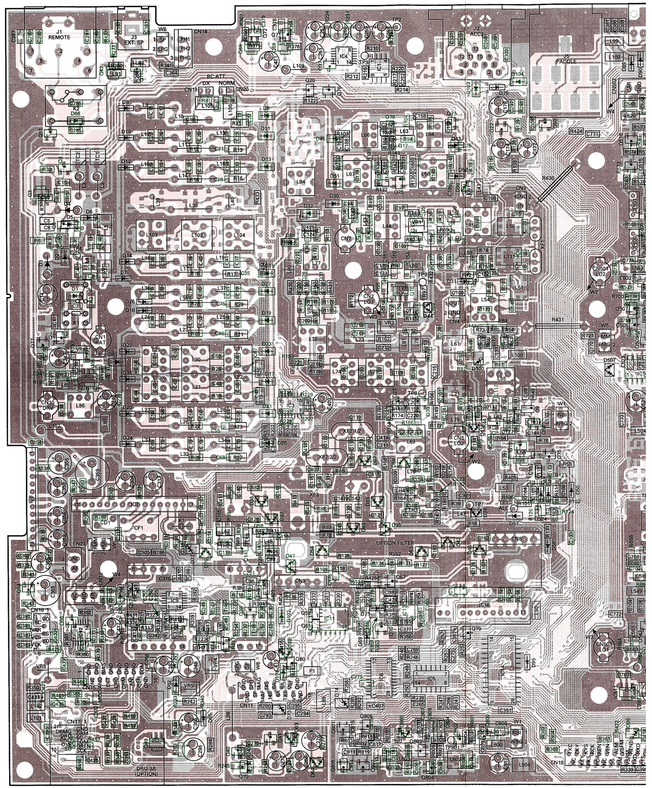

TX-RX UNIT (X57-500X-XX) : RF 0-10 : K,M2 2-71 : E,E2,E3

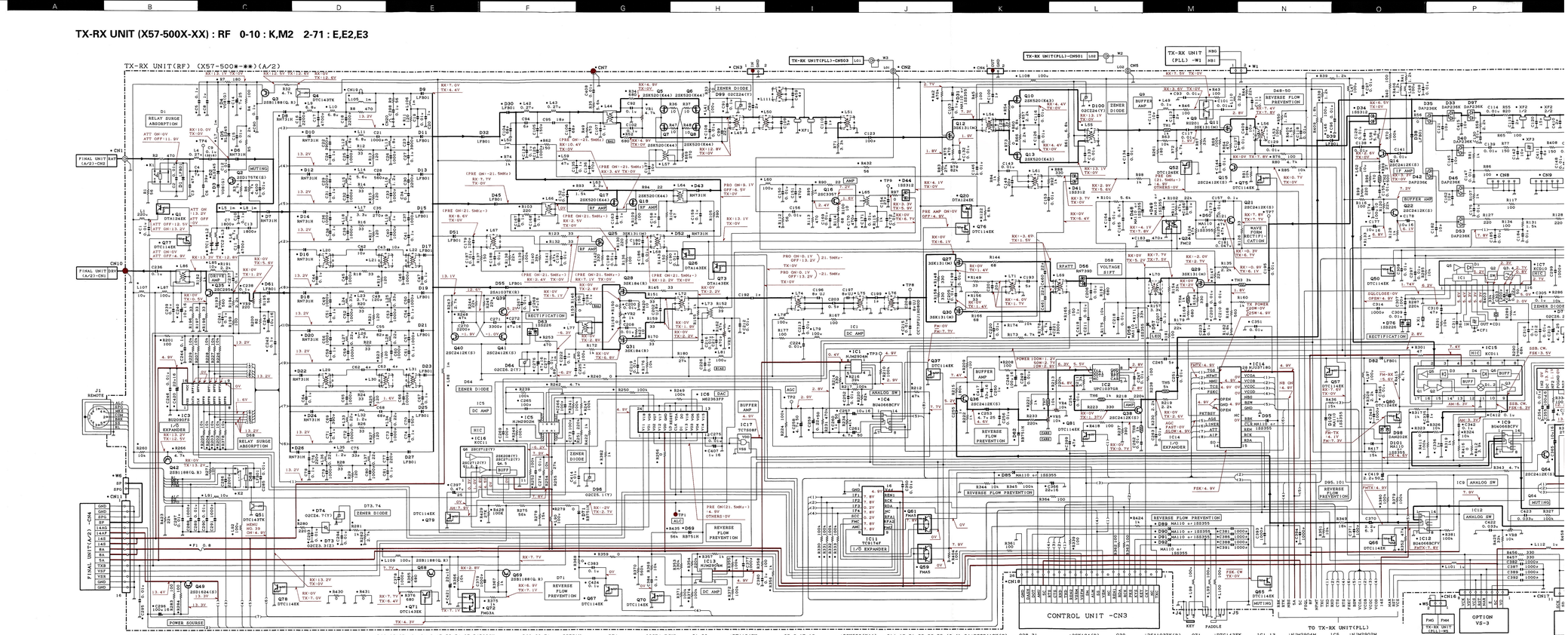

TS-570D CIRCUIT DIAGRAM

TX-RX UNIT (X57-500X-XX) : PLL 0-10 : K,M2 2-71 : E,E2,E3

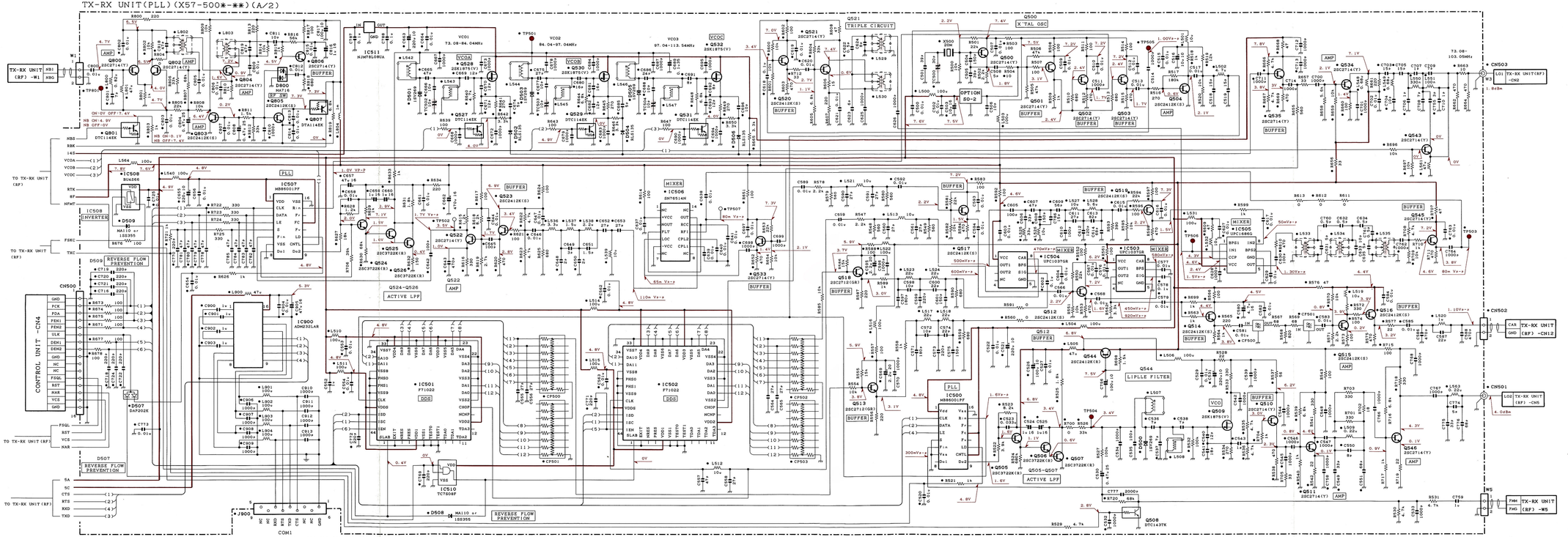

D500, 501, 503, 505	1SV269	D508, 509	1SS355 or MA110	Q500-503, 510, 511, 521, 522,	Q504, 512, 514, 515-517,	2SC2412K(S)	Q508	DTC143TK	Q527, 529, 531, 801	DTC114EK	IC500, 507	MB86001PF	IC505	UPC1686G	IC510	TC7S08F
D502, 504, 506	RLS135	D800	MA116	533-535, 543, 545, 546,	519, 520, 523, 803, 805	2SC3722K(R)	Q509, 528, 530, 532	2SK1875(V)	Q544	2SC2412K(R)	IC501, 502	DN76514N	IC506	DN76514N	IC511	NJM78L08UA
D507	DAP202K			800, 802, 804, 806	Q505-507, 524-526		Q513, 518	2SC2712(GR)	Q807	DTA114EK	IC503, 504	UPC1037GR	IC508	BU4066	IC900	ADM232LAR
						2SC2714(Y)										

TS-570D TS-570D

BLOCK DIAGRAM

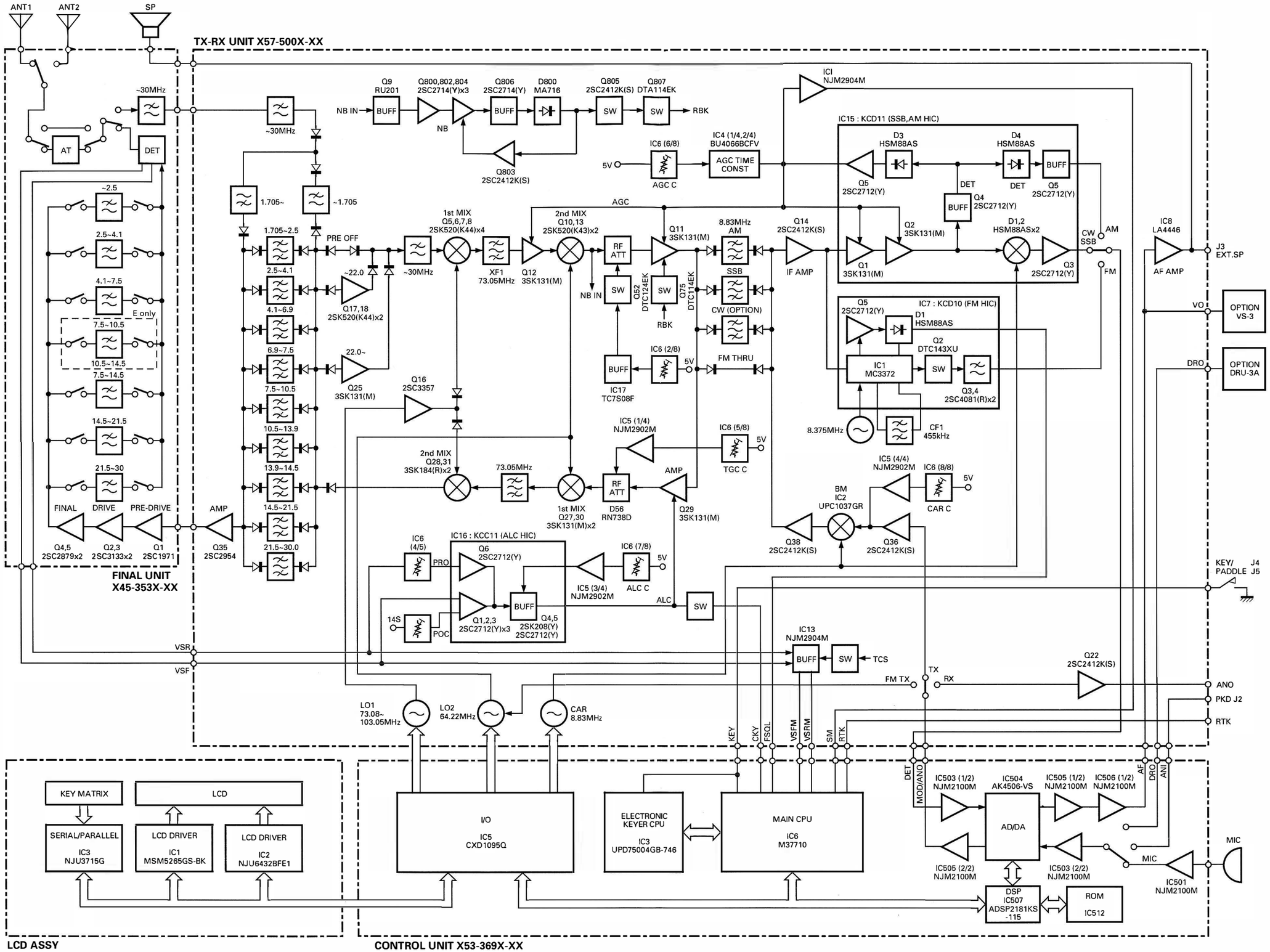

TS-570D TS-570D

LEVEL DIAGRAM

Receiver Section

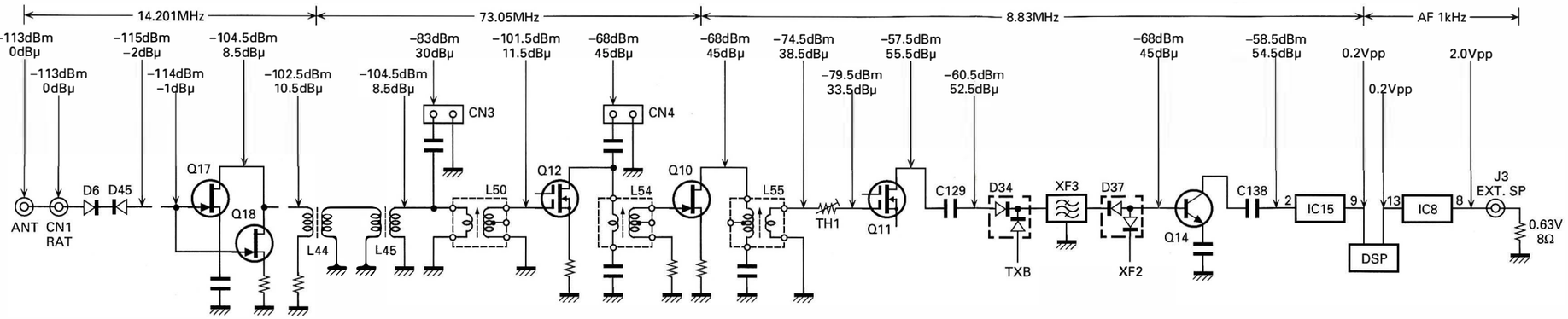

■ **Measurement condition**

Frequency : 14.200MHz
PRE AMP : ON
ANT input : –113dBm
AF output : 0.63V/8Ω, 1kHz

The figures shown are signal generator output required for a constant ausio output with a constant AF gain control setting. Set the AF gain control for 0.63V/8Ω audio output at –113dBm signal generator input at 14.201MHz
To measure signal generator output connect a 0.01μF capacitor between the signal generator and the check point.

Transmitter Section

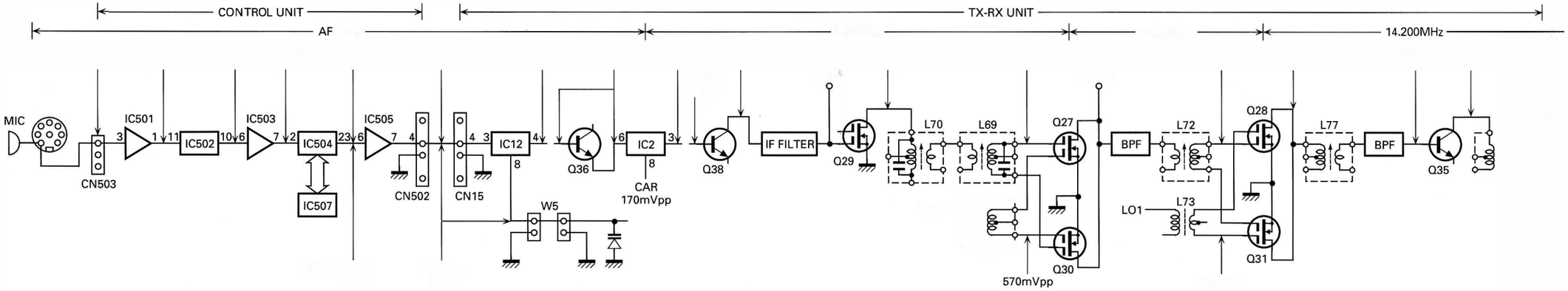

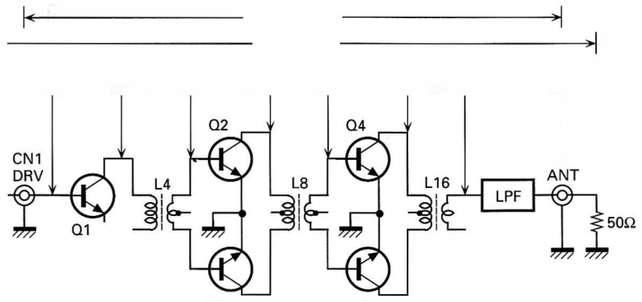

VS-3 (VOICE SYNTHESIZER UNIT) / DRU-3A (DIGITAL RECORDING UNIT)

VS-3 External View

VS-3 Circuit Diagram

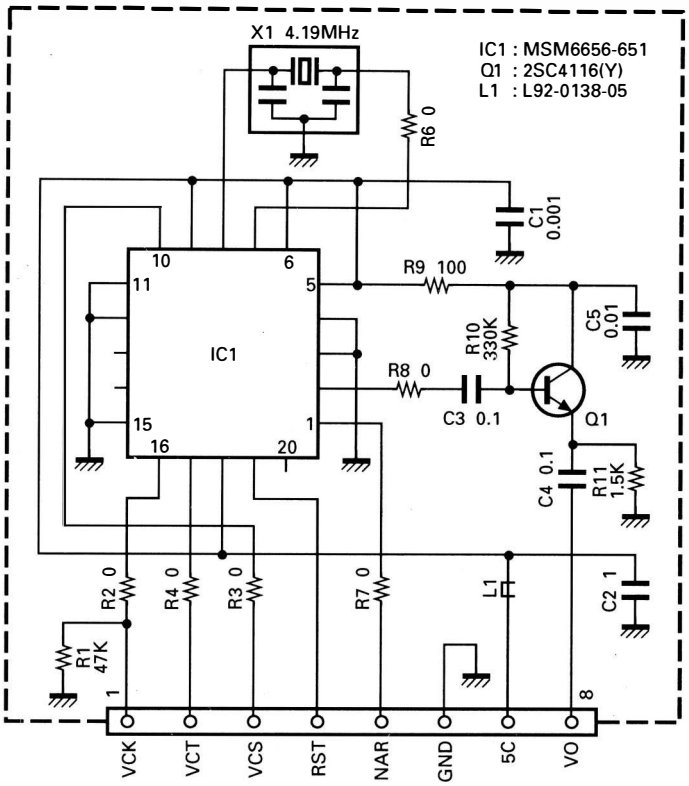

DRU-3A External View

Note : Without shielding cover

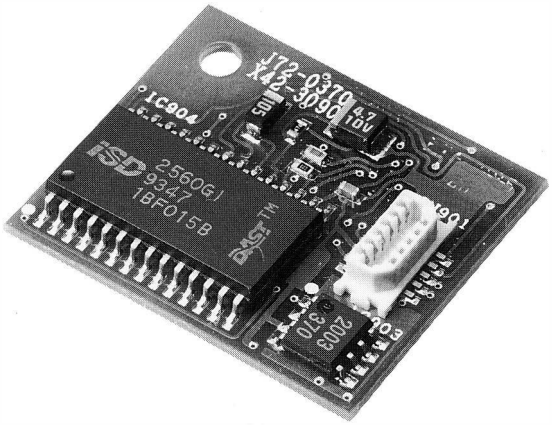

DRU-3A Parts List

Ref. No.	New parts	Parts No.	Description
C901,902		CK73FB1H103K	CHIP C 0.010UF K
C903		CK73FF1E104Z	CHIP C 0.1UF Z
C905		CK73GB1H103K	CHIP C 0.010UF K
C906		C92-0004-05	TAN C 1.0UF 16WV
C907		CK73GB1H102K	CHIP C 1000PF K
C908		C92-0009-05	TAN C 4.7UF 10WV
C909		CK73GB1H103K	CHIP C 1000PF K
CN901		E40-5748-05	PIN CONNECTOR (11P)
700	*	F10-2241-04	SHIELDING COVER
701	*	F10-2242-04	SHIELDING COVER
R901,902		RK73GB1J103J	CHIP R 10K J 1/16W
R903		RK73GB1J223J	CHIP R 22K J 1/16W
R904		RK73GB1J103J	CHIP R 10K J 1/16W
R905		RK73GB1J474J	CHIP R 470K J 1/16W
R906,907		RK73GB1J103J	CHIP R 10K J 1/16W
R908		R92-1252-05	CHIP R 0 OHM
IC901,902		MB88306PF	IC
IC903		M62003FP	IC
IC904		ISD2560GI	IC
IC905		TC74HC112AF	IC

DRU-3A (DIGITAL RECORDING UNIT)

DRU-3A Circuit Diagram

X43-3090-20

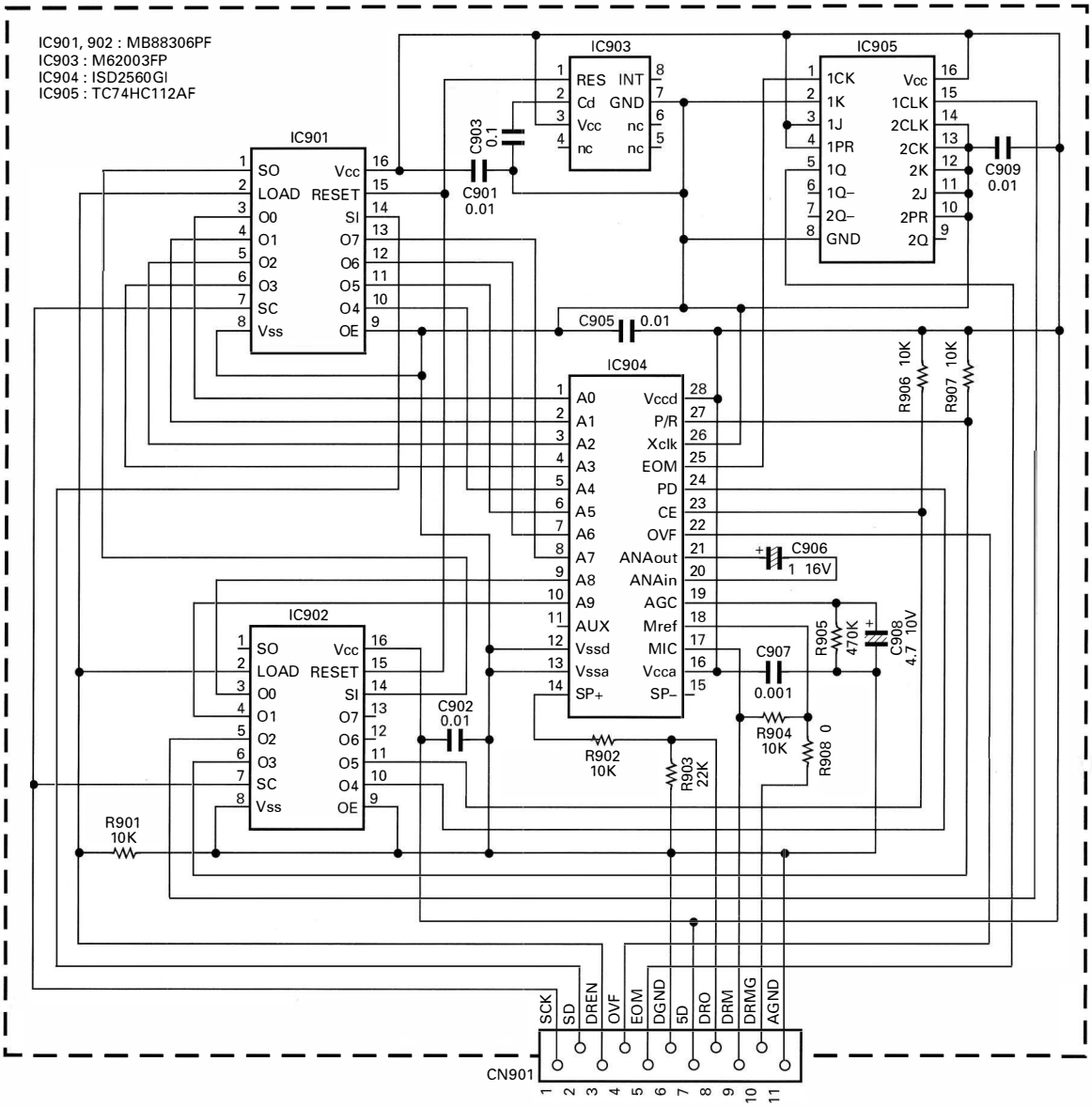

SPECIFICATIONS

	Item			Rating
GENERAL	Mode			J3E (LSB, USB), A1A (CW), A3E (AM), F3E (FM), F1D (FSK)
	Number of memory channels			100
	Antenna impedance			50Ω (With Antenna Tuner 16.7 to 150Ω)
	Supply voltage			DC 13.8V ± 15%
	Grounding method			Negative ground
	Current	Transmit (Max.)		20.5A
		Receive (No signal)		2A
	Usable temperature range			–10°C to +50°C (+14°F to +122°F)
	Frequency stability (–10°C to +50°C)			Within ±10PPM
	Frequency accuracy (At room temperature)			Within ±10PPM
	Dimensions [W x H x D] (Projections included)			270 x 96 x 270 mm/10.6 x 3.8 x 10.6 in (281 x 107 x 314 mm/11.1 x 4.2 x 12.4 in)
	Weight			Approx. 6.8kg (15 lbs)
TRANSMITTER	Frequency range	160m band		1.8*1 to 2.0*2MHz
		80m band		3.5 to 4.0*3MHz
		40m band		7.0 to 7.3*4MHz
		30m band		10.1 to 10.15MHz
		20m band		14.0 to 14.35MHz
		17m band		18.068 to 18.168MHz
		15m band		21.0 to 21.45MHz
		12m band		24.89 to 24.99MHz
		10m band		28.0 to 29.7MHz
	Output power*5	SSB, CW, FSK, FM	Max.	100W
			Min.	5W
		AM	Max.	25W
			Min.	5W
	Modulation	SSB		Balanced
		FM		Reactance
		AM		Low level
	Spurious emissions			–50dB or less
	Carrier suppression			40dB or more
	Unwanted sideband suppression (Modulation frequency 1.0kHz)			40dB or more
	Maximum frequency deviation (FM)	Wide		±5kHz or less
		Narrow		±2.5kHz or less
	XIT shift frequency range			±9.99kHz
	Microphone imppedance			8Ω

*1 1.81MHz : Europe, France, Holland; 1.83MHz : Belgium, Spain
*2 1.85MHz : Belgium, France, Holland, Spain
*3 3.8MHz : Europe, Belgium, France, Holland, Spain
*4 7.1MHz : Europe, Belgium, France, Holland, Spain
*5 Belgium, Spain : 10W fixed on 160m band

TS-570D

SPECIFICATIONS

	Item			Rating
RECEIVER	Circuit type			Double conversion superheterodyne FM only : Triple conversion superheterodyne
	Frequency range			500kHz to 30MHz
	Intermediate frequency			1st : 73.05MHz, 2nd : 8.83MHz, 3rd : 455kHz (FM only)
	Sensitivity	SSB, CW, FSK (At 10dB (S+N)/N)	500kHz to 1.705MHz	4μV or less
			1.705MHz to 24.5MHz	0.2μV or less
			24.5MHz to 30MHz	0.13μV or less
		AM (At 10dB (S+N)/N)	500kHz to 1.705MHz	31.6μV or less
			1.705MHz to 24.5MHz	2μV or less
			24.5MHz to 30MHz	1.3μV or less
		FM (At 12dB SINAD)	28MHz to 30MHz	0.25μV or less
	Selectivity	SSB, CW, FSK		–6dB : 2.2kHz, –60dB : 4.4kHz
		AM		–6dB : 4kHz, –50dB : 20kHz
		FM		–6dB : 12kHz, –50dB : 25kHz
	Image rejection (1.8MHz to 30MHz)			70dB or more
	1st IF rejection (1.8MHz to 30MHz)			70dB or more
	RIT shift frequency range			±9.99kHz
	Squelch sensitivity	SSB, CW, FSK, AM	500kHz to 1.705MHz	20μV or less
			1.705MHz to 30MHz	2μV or less
		FM	28MHz to 30MHz	0.25μV or less
	Audio output (8Ω, 10% distortion)			1.5W or more
	Audio output impedance			8Ω

Specifications are subject to change without notice or obligation due to ongoing technological developments.

KENWOOD CORPORATION
14-6, Dogenzaka 1-chome, Shibuya-ku, Tokyo 150, Japan

KENWOOD SERVICE CORPORATION
P.O. BOX 22745, 2201 East Dominguez Street, Long Beach, CA 90801-5745, U.S.A.

KENWOOD ELECTRONICS LATIN AMERICA S.A.
P.O. BOX 55-2791 Piso 6 Plaza Chase Cl. 47 y Aquilino de la Guardio Panama, Republic of Panama

KENWOOD ELECTRONICS CANADA INC.
6070 Kestrel Road, Mississauga, Ontario, Canada L5T 1S8

KENWOOD ELECTRONICS DEUTSCHLAND GMBH
Rembrücker Str. 15, 63150 Heusenstamm, Germany

KENWOOD ELECTRONICS BENELUX N.V.
Mechelsesteenweg 418 B-1930 Zaventem, Belgium

TRIO-KENWOOD FRANCE S.A.
13, Boulevard Ney, 75018 Paris, France

TRIO-KENWOOD U.K. LIMITED
KENWOOD House, Dwight Road, Watford, Herts., WD1 8EB United Kingdom

KENWOOD ELECTRONICS NEDERLAND B.V.
Amsterdamseweg 35, 1422 AC Uithoorn, The Netherlands

KENWOOD ELECTRONICS ITALIA S.p.A.
Via G. Sirtori, 7/9 20129 Milano, Italy

KENWOOD IBERICA S.A.
Bolivia, 239-08020 Barcelona, Spain

KENWOOD ELECTRONICS AUSTRALIA PTY. LTD.
(A.C.N. 001 499 074)
P.O. Box 504, 8 Figtree Drive, Australia Centre, Homebush, N.S.W. 2140, Australia

KENWOOD & LEE ELECTRONICS, LTD.
Unit 3712-3724, Level 37, Tower one Metroplaza, 223 Hing Fong Road, Kwai Fong, N.T., Hong Kong