TRIO JR-500S

ALAN BAIN

SHEET 1 OF 2

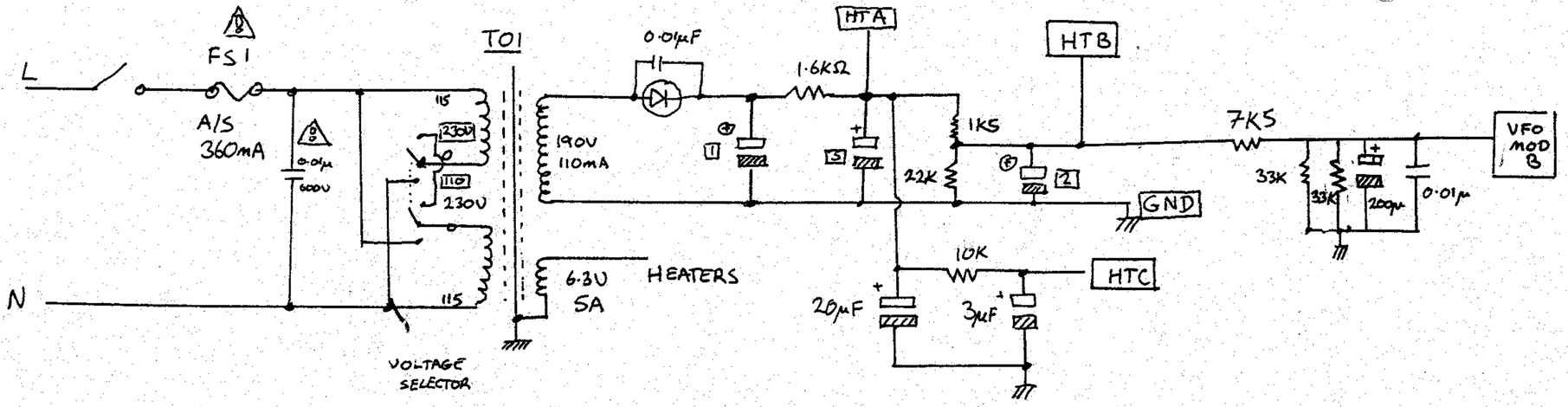

MAINS PSU

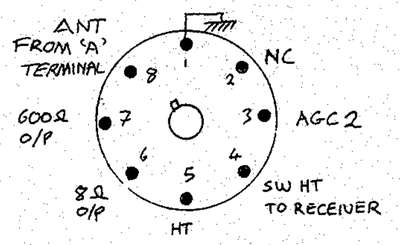

CONTROL

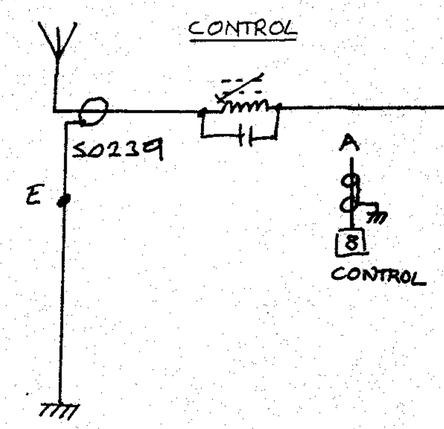

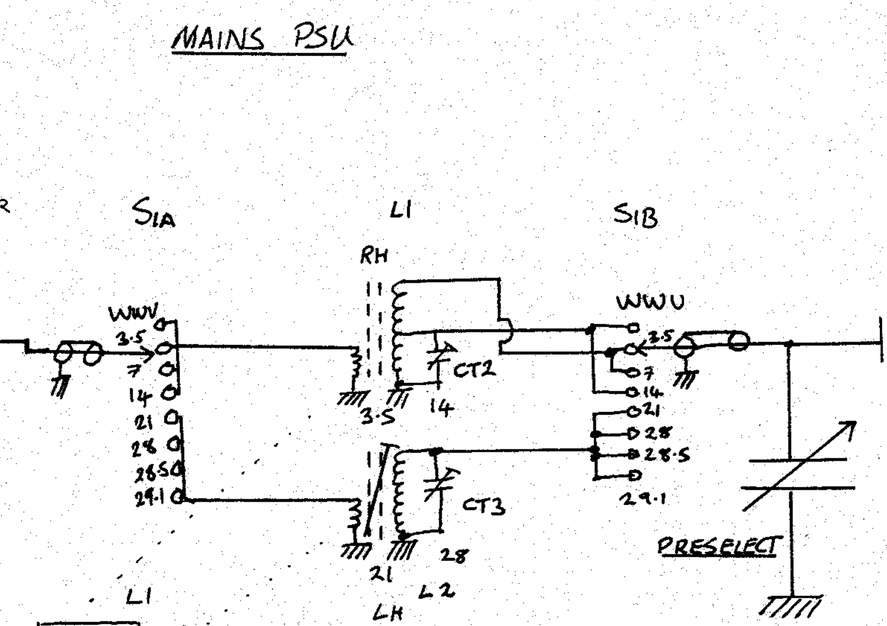

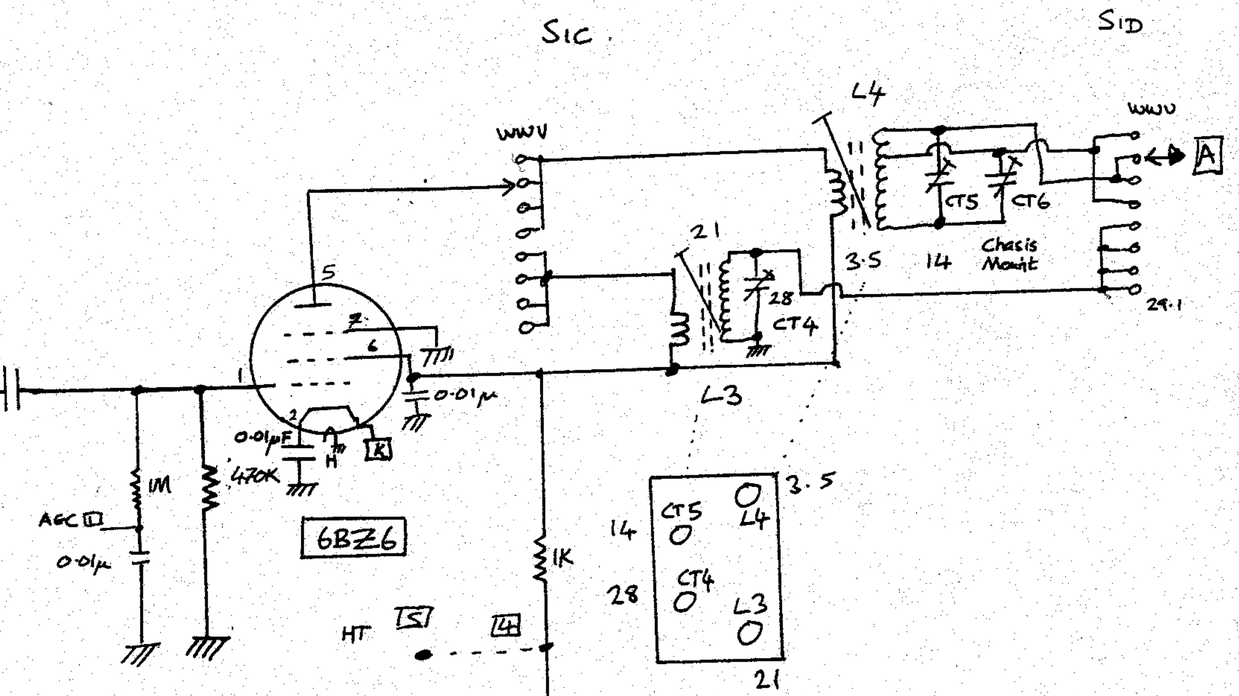

ANTENNA BP FILTER

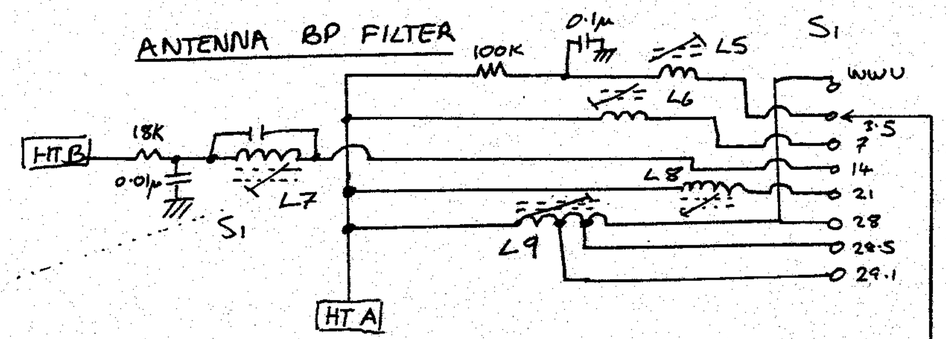

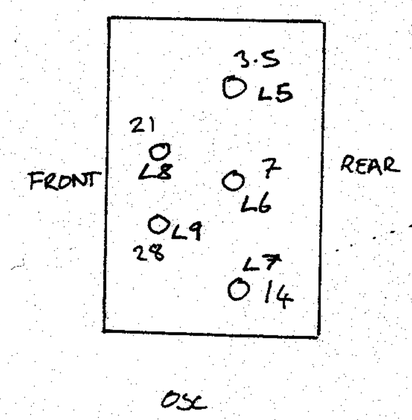

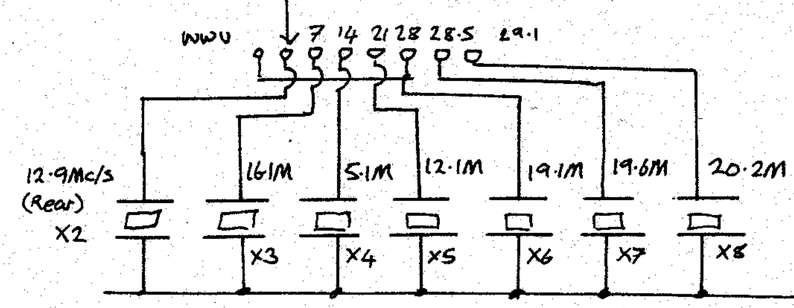

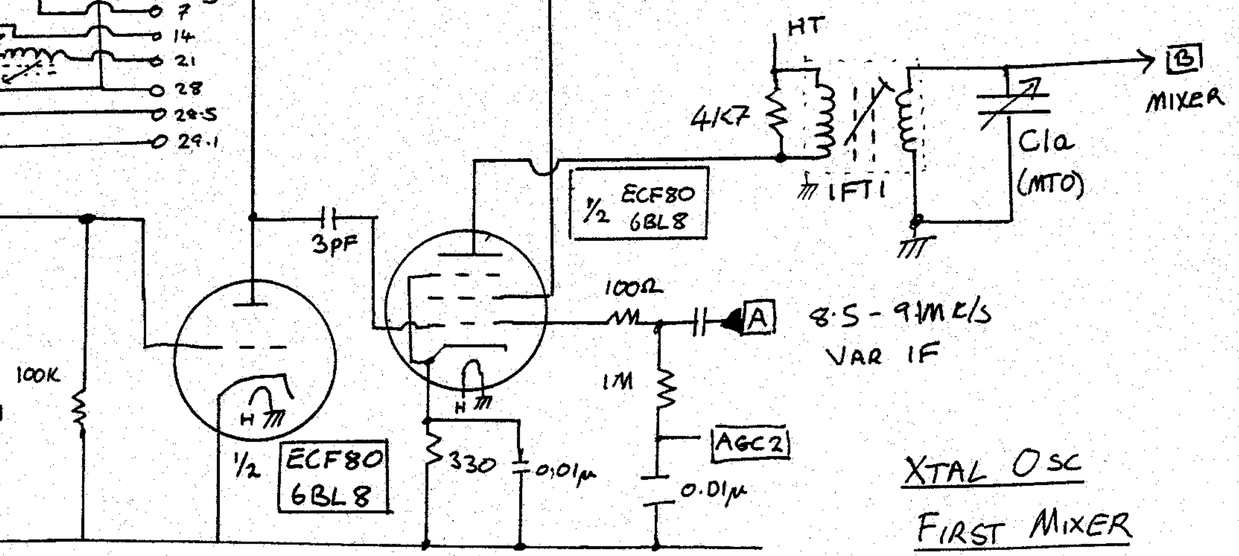

XTAL OSC

FIRST MIXER

TR10 JR-500S

ALAN BAIN

SHEET 2 OF 2

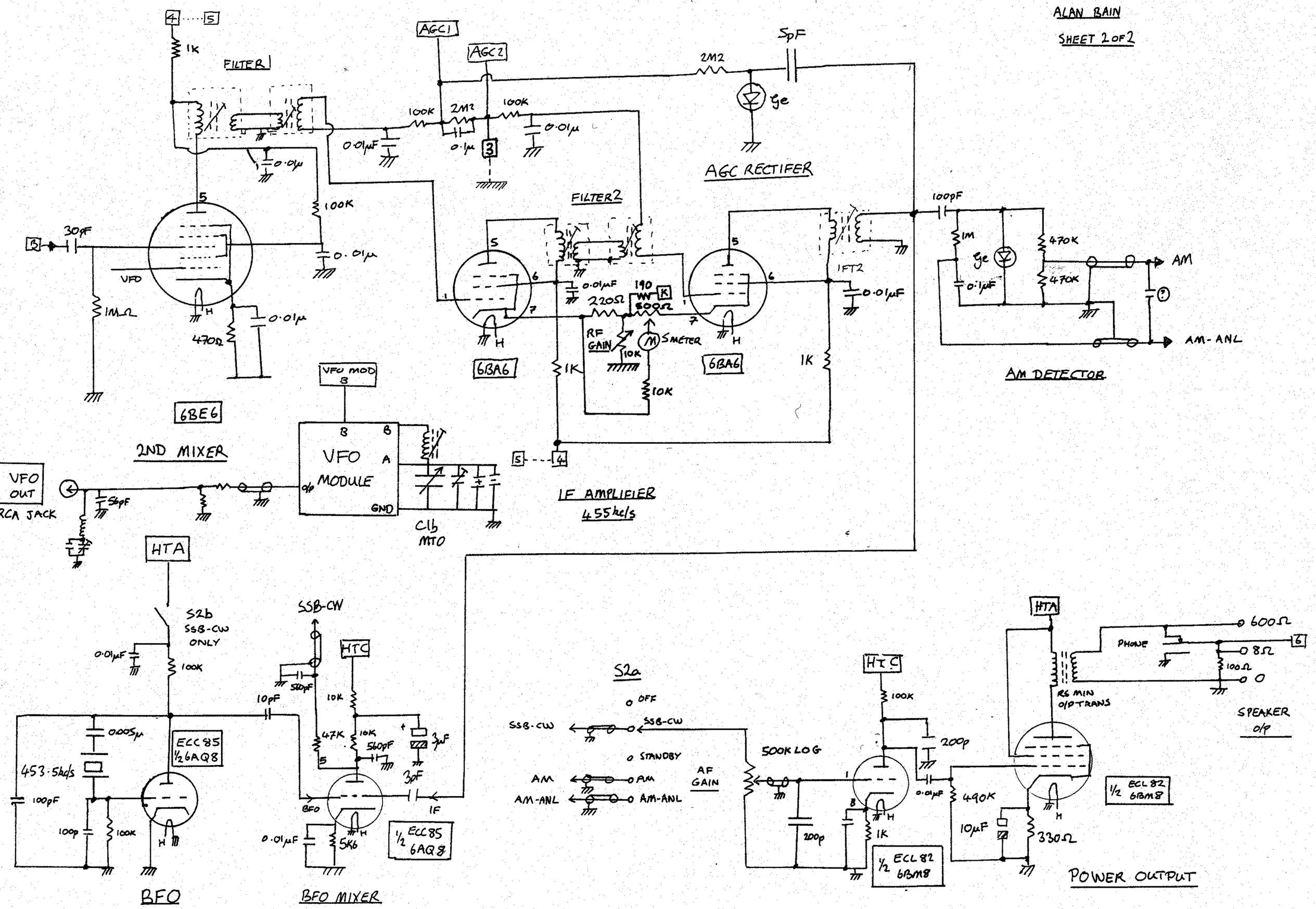

TRIO JR 500S

BLOCK DIAGRAM.

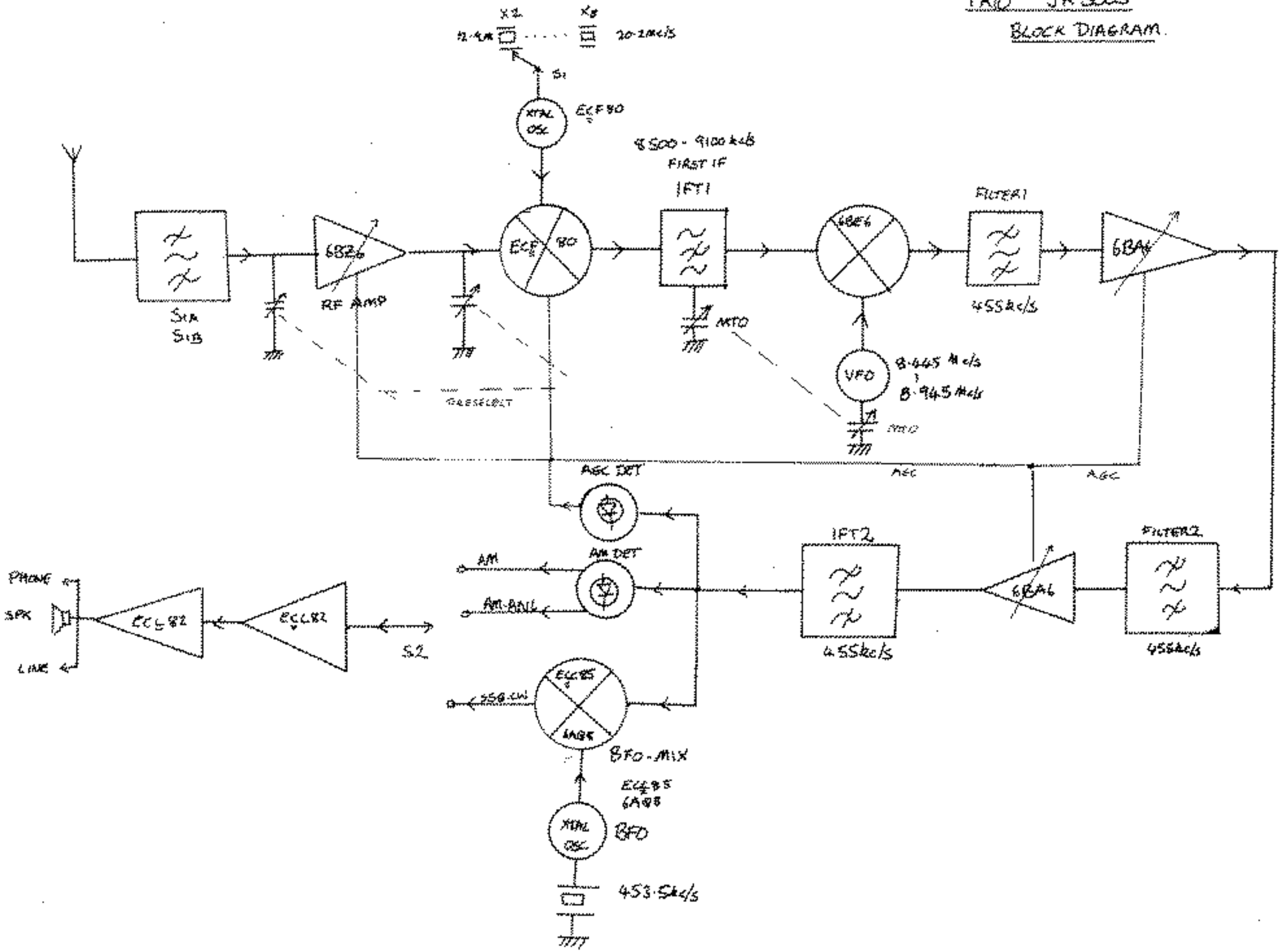

TRIO JR-500S

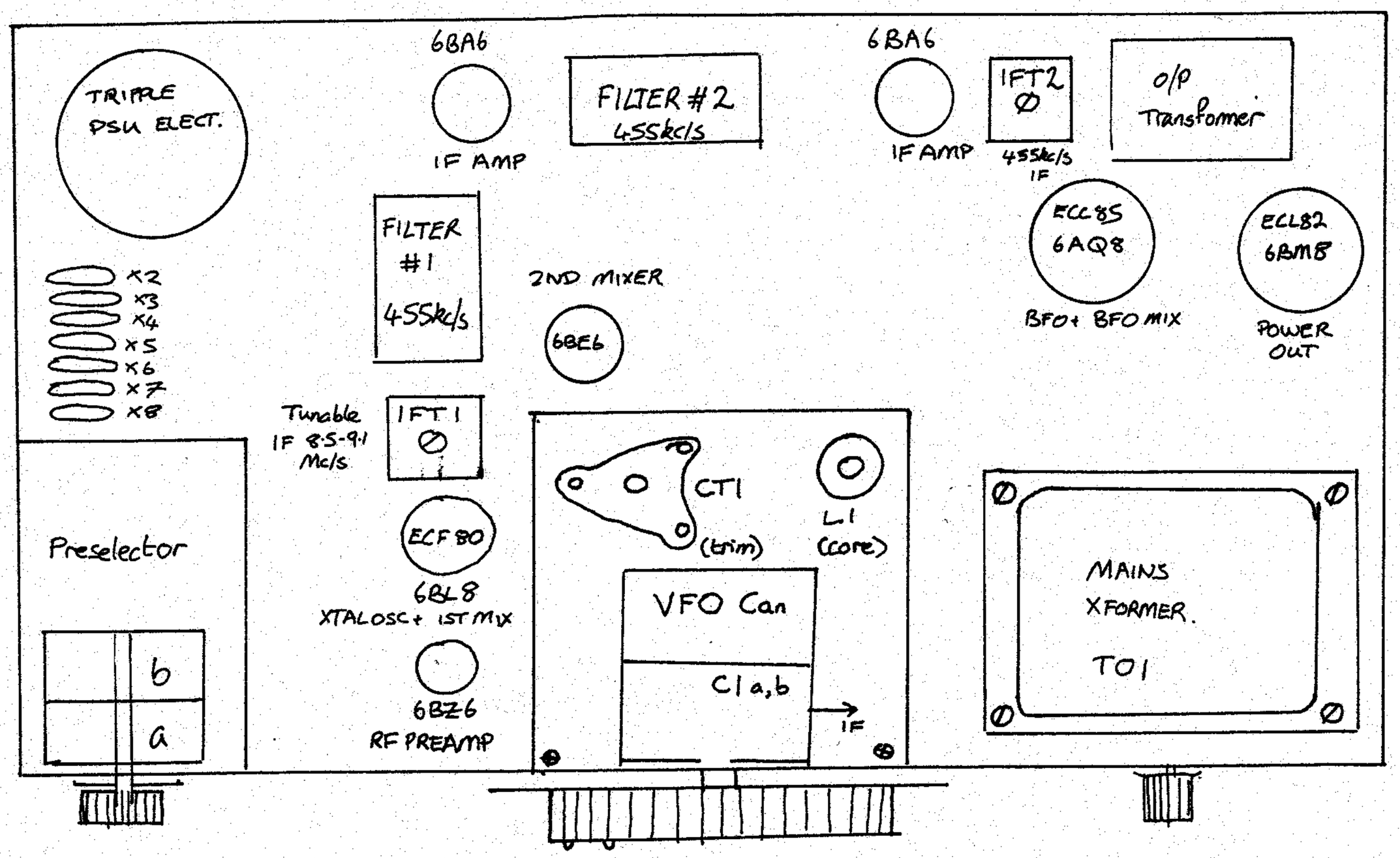
TRIPPLE PSU ELECT.
6BA6
IF AMP
FILTER #2 455kc/s
6BA6
IF AMP
IFT2 Ø
455kc/s IF
o/p Transformer
ECC85 6AQ8
BFO + BFO MIX
ECL82 6BM8
POWER OUT
FILTER #1 455kc/s
2ND MIXER
6BE6
X2
X3
X4
X5
X6
X7
X8
Tunable IF 8.5-9.1 Mc/s
IFT1 Ø
CT1 (trim)
L1 (core)
Preselector
ECF80
6BL8
XTAL OSC + 1ST MIX
VFO Can
C1 a,b
IF
MAINS XFORMER.
T01
b
a
6BZ6
RF PREAMP