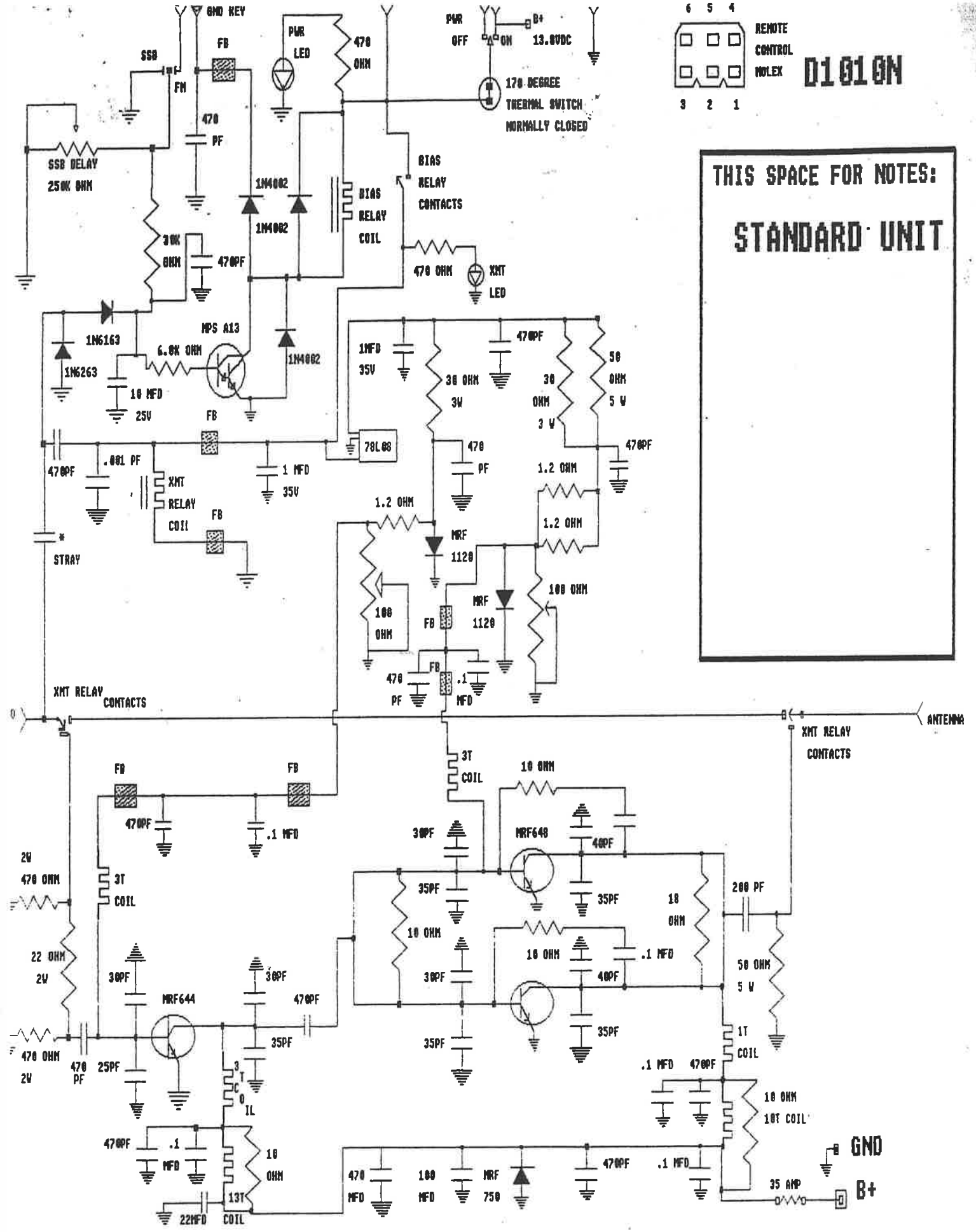
GND KEY
SSB
FM
FB
PWR LED
470 OHM
PWR OFF
ON
B+ 13.8VDC
170 DEGREE THERMAL SWITCH NORMALLY CLOSED
6 5 4
REMOTE CONTROL MOLEX
3 2 1
D1010N
THIS SPACE FOR NOTES:
STANDARD UNIT
SSB DELAY 250K OHM
470 PF
1N4002
1N4002
BIAS RELAY COIL
BIAS RELAY CONTACTS
30K OHM
470PF
470 OHM
XMT LED
1N6163
1N6263
MPS A13
6.8K OHM
1N4002
10 MFD 25V
1MFD 35V
470PF
30 OHM 3W
30 OHM 3 W
50 OHM 5 W
470PF
78L08
470PF
.001 PF
XMT RELAY COIL
1 MFD 35V
470 PF
1.2 OHM
1.2 OHM
1.2 OHM
MRF 1120
STRAY
100 OHM
MRF 1120
100 OHM
470 PF
.1 MFD
XMT RELAY CONTACTS
ANTENNA
XMT RELAY CONTACTS
3T COIL
10 OHM
470PF
.1 MFD
30PF
MRF648
40PF
2W 470 OHM
3T COIL
35PF
35PF
18 OHM
200 PF
10 OHM
10 OHM
.1 MFD
22 OHM 2W
30PF
30PF
40PF
50 OHM 5 W
MRF644
470PF
35PF
35PF
35PF
1T COIL
470 OHM 2W
470 PF
25PF
3T COIL
.1 MFD
470PF
10 OHM 10T COIL
470PF
.1 MFD
10 OHM
13T COIL
22MFD
470 MFD
100 MFD
MRF 750
470PF
.1 MFD
GND
35 AMP
B+

3-20-90