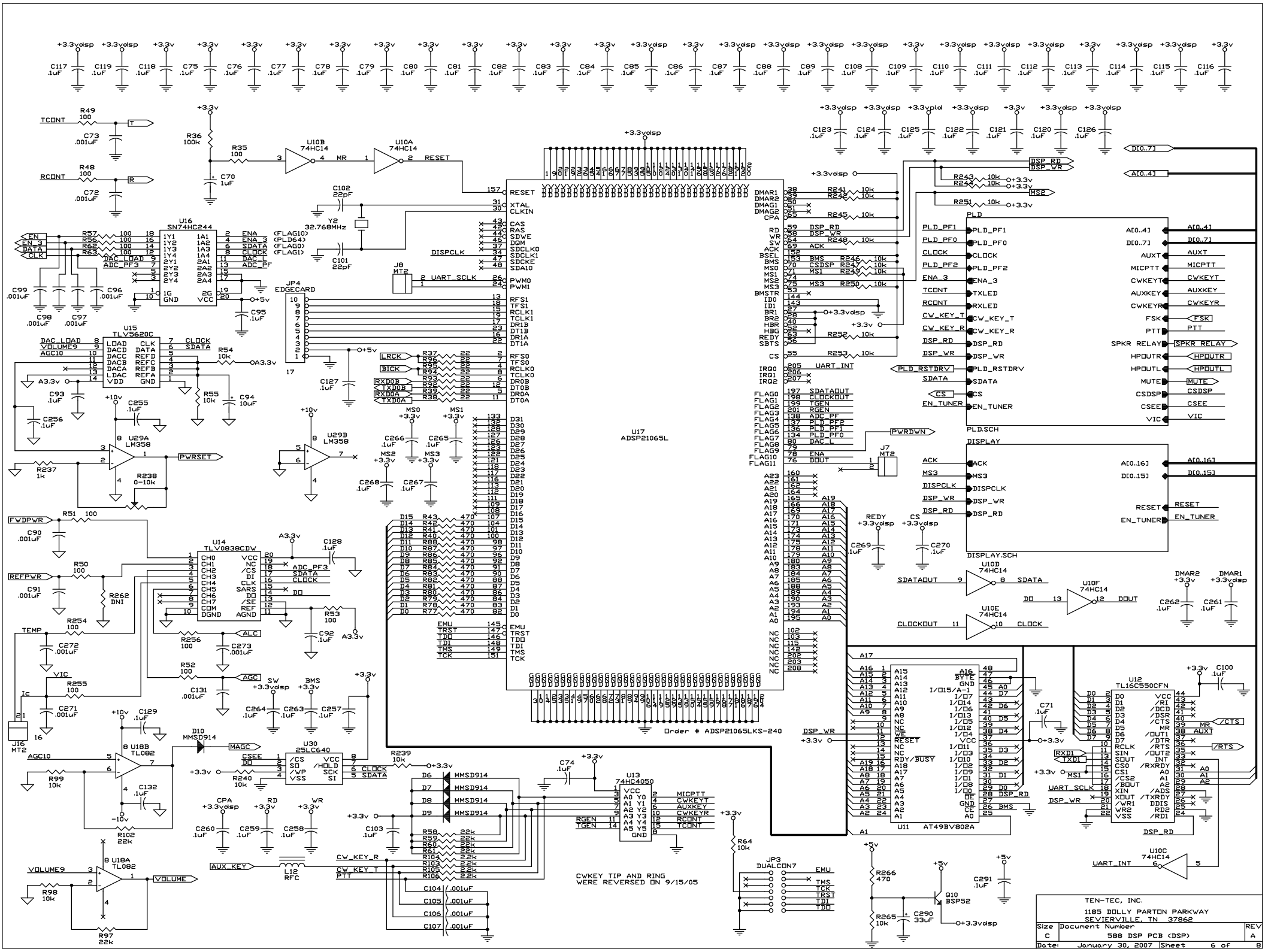
U17
ADSP21065L
U16
SN74HC244
U15
TLV5620C
U14
TLV0838CDW
U29A
LM358
U29B
LM358
U10B
74HC14
U10A
74HC14
U10D
74HC14
U10E
74HC14
U10F
74HC14
U10C
74HC14
U18B
TL082
U18A
TL082
U30
25LC640
U13
74HC4050
U12
TL16C550CFN
U11
AT49BV802A
JP4
EDGECARD
JP3
DUALCON7
J8
MT2
J7
MT2
J16
MT2
Y2
32.768MHz
L12
RFC
Q10
BSP52
PLD
PLD.SCH
DISPLAY
DISPLAY.SCH
Order # ADSP21065LKS-240
CWKEY TIP AND RING
WERE REVERSED ON 9/15/05
TEN-TEC, INC.
1185 DOLLY PARTON PARKWAY
SEVIERVILLE, TN 37862
Size C
Document Number
588 DSP PCB (DSP)
REV A
Date: January 30, 2007
Sheet 6 of 8